# CITY OF BEVERLY HILLS DOG PARK

## 344 FOOTHILL ROAD BEVERLY HILL, CA 90210

## GENERAL NOTES

1. ALL WORK IS WITHIN AN EXISTING AREA.
2. ALL CONSTRUCTION SHALL CONFORM TO THE FOLLOWING: CALIFORNIA BUILDING CODE 2013, WITH CITY OF BEVERLY HILLS AMENDMENTS.OTHER APPLICABLE LAWS, ORDINANCES AND REGULATIONS HAVING JURISDICTION.
3. IT SHALL BE THE CONTRACTOR'S RESPONSIBILITY TO VERIFY ALL DIMENSIONS AT THE JOB SITE AND TO CROSS CHECK DETAILS AND DIMENSIONS SHOWN ON THE STRUCTURAL DRAWINGS WITH RELATED REQUIREMENTS ON THE ARCHITECTURAL, ELECTRICAL PLUMBING AND/OR MECHANICAL DRAWINGS. FLOOR AND WALL OPENINGS, SLEEVES, AND OTHER ARCHITECTURAL, ELECTRICAL PLUMBING AND/OR MECHANICAL REQUIREMENTS MUST BE COORDINATED BEFORE THE CONTRACTOR PROCEEDS WITH THE CONSTRUCTION.
4. ALL CONTRACTORS DOING BUSINESS IN THE CITY OF BEVERLY HILLS MUST BE LICENSED BY THE STATE AND SHALL HAVE A CERTIFICATE OF WORKMAN'S COMPENSATION ON FILE WITH THE CITY OF BEVERLY HILLS. SEPARATE PERMIT ARE REQUIRED FOR ELECTRICAL, MECHANICAL, AND PLUMBING. THESE ARE TO BE OBTAINED BY THE CONTRACTORS.
5. A SEPARATE APPLICATION AND PERMIT IS REQUIRED FOR: ELECTRICAL WORK, MECHANICAL WORK, PLUMBING WORK
6. ALL ELECTRICAL, MECHANICAL AND PLUMBING SHALL CONFORM TO THE REQUIREMENTS OF ALL LEGALLY CONSTITUTED AUTHORITIES HAVING JURISDICTION.
7. SCOPE DOCUMENTS. THESE DRAWINGS INDICATE THE GENERAL SCOPE OF THE PROJECT IN TERMS OF ARCHITECTURAL DESIGN CONCEPT, THE DIMENSIONS OF THE BUILDING, THE MAJOR ARCHITECTURAL ELEMENTS AND THE TYPE OF STRUCTURAL, MECHANICAL AND ELECTRICAL SYSTEMS ON THE BASIS OF THE GENERAL SCOPE INDICATED OR DESCRIBED. FURNISH ALL ITEMS REQUIRED FOR THE EXECUTION AND COMPLETION OF WORK.
8. ALL CONSTRUCTION AND MATERIALS SHALL BE AS SPECIFIED AND AS REQUIRED BY THE CALIFORNIA BUILDING CODE AND LOCAL GOVERNING CODES AND AUTHORITIES.
9. BEFORE STARTING EACH PORTION OF THE WORK THE CONTRACTOR SHALL CAREFULLY STUDY AND COMPARE THAT PORTION OF THE WORK TO THE VARIOUS CONTRACT DOCUMENTS, THE CONTRACTOR SHALL PROMPTLY REPORT TO THE ARCHITECT, FOR CLARIFICATION. ANY ERRORS, INCONSISTENCIES OR OMISSIONS MADE KNOWN TO THE CONTRACTOR FOLLOWING STUDY OF THE CONTRACT DOCUMENTS. PRESENTATION OF A BID ALSO CERTIFIES THAT THE CONTRACTOR UNDERSTANDS THE FULL INTENT OF THE CONTRACT DOCUMENTS AND THE CONTRACTOR WILL PROVIDE A COMPLETE AND FUNCTIONAL FACILITY CONSISTENT WITH THE INTENT OF THE CONTRACT DOCUMENTS.
10. INSPECTION OF CONDITIONS: INSPECT SUBSTRATE TO RECEIVE WORK, AND CONDITIONS UNDER WHICH WORK WILL BE PERFORMED, AND REPORT UNSATISFACTORY CONDITIONS. DO NOT PROCEED WITH THE WORK UNTIL UNSATISFACTORY CONDITIONS HAVE BEEN CORRECTED.
11. THE ARCHITECT WILL INTERPRET THE INTENT OF THE DOCUMENTS IN CASE OF POSSIBLE CONFLICT OR DISCREPANCY.
12. THE CONTRACTOR SHALL NOT BE PERMITTED TO SUBMIT THE FOLLOWING TYPE OF REQUESTS FOR CLARIFICATION OR INFORMATION:
    - PROPRIETARY DATA: SUCH AS THE SIZE AND TYPE OF FASTENERS TO ATTACH SHEATHING ON A BUILDING WHEN SUCH INFORMATION IS USUALLY PROVIDED BY THE MANUFACTURER AS PROPRIETARY INFORMATION.
    - MEANS AND METHODS: SUCH AS "IS SCAFFOLDING ALLOWED?" IS THE RESPONSIBILITY OF THE CONTRACTOR.\
    - AMBIGUOUS ANSWERS: ASKING A QUESTION REPEATEDLY IN A DIFFERENT MANNER AND CLAIMING THAT THE REPEATED RFI INDICATES THE PREVIOUS QUESTIONS WERE NOT ANSWERED.
10. SCHEDULE TRACKING: THE CONTRACTOR SHALL INDICATE ON THE RFI THE NUMBER OF WORKING DAYS REQUIRE FOR AN ANSWER TO THE QUESTION THAT WILL NOT AFFECT THE CRITICAL PATH SCHEDULED OF THE PROJECT. IT WILL BE THE RESPONSIBILITY OF THE CONTRACTOR TO SCHEDULE AND SUBMIT RFI'S ALLOWING THE ARCHITECT 15 WORKING DAYS TO RESPOND. AN RFI SUBMITTED TO CONFIRM THE ANSWER TO A PREVIOUS RFI SHALL NOT IN ANY WAY BE ALLOWED TO AFFECT THE SCHEDULE.
11. THE OWNER, ARCHITECT, AND CONTRACTOR RECOGNIZE THAT THE AMOUNT OF, AND TIMING OF RFI'S IS CONTROLLED BY THE CONTRACTOR. RFI'S ARE NOT INDICATIVE OF THE QUALITY AND COMPLETENESS OF THE CONTRACT DOCUMENTS JUST AS THEY ARE NOT INDICATIVE OF THE CONTRACTOR'S COMPLETENESS OF STUDY AND UNDERSTANDING OF THE CONTRACT DOCUMENTS.
12. RFI'S (REQUESTS FOR INFORMATION) PREPARED BY THE CONTRACTOR MUST CONTAIN THE INTENT OF THE CONTRACTOR TO RESOLVE THE ITEM IN QUESTION CONSISTENT WITH GENERAL NOTES NO. 1 AND NO. 2. RFI'S WILL BE CONSIDERED A SUBMITTAL FROM THE CONTRACTOR AND WILL BE REVIEWED AS A SUBMITTAL BY THE ARCHITECT.
13. FIELD MEASURE AND CONFIRM DIMENSIONS FOR OWNER PROVIDED EQUIPMENT AND FURNISHINGS. THE CONTRACTOR SHALL COORDINATE WITH THE OWNER ON DELIVERY AND INSTALLATION OF O.F.C.I. EQUIPMENT. MINIMUM REQUIRED OPENINGS AND ACCESSIBLE ROUTES TO THE INSTALLATION AREA SHALL BE COORDINATED WITH THE SUPPLIER.
14. CONFINE ALL OPERATIONS ON THE SITE TO AREAS PERMITTED BY THE OWNER. THE WORK SHALL BE DONE IN ACCORDANCE WITH ALL APPLICABLE LAWS, LOCAL ORDINANCES, PERMITS AND THE CONTRACT DOCUMENTS. THE JOB SITE IS TO BE MAINTAINED IN A CLEAN, ORDERLY CONDITION FREE OF DEBRIS AND LITTER AND SHALL NOT BE UNREASONABLY ENCUMBERED WITH ANY MATERIAL OR EQUIPMENT. EACH SUBCONTRACTORS IMMEDIATELY UPON COMPLETION OF EACH PHASE OF HIS WORK SHALL REMOVE ALL TRASH AND DEBRIS AS A RESULT OF HIS OPERATION.
15. WHERE MATERIALS ARE APPLIED TO, OR ARE IN DIRECT CONTACT WITH WORK INSTALLED BY ANOTHER SUBCONTRACTOR, COMMENCEMENT OF WORK IMPLIES ACCEPTANCE OF THE SUBSTRATE AS SUITABLE FOR THE APPLICATION INTENDED.
16. ALL MATERIAL STORED ON THE SITE SHALL BE STACKED AND PROTECTED TO PREVENT DAMAGE AND DETERIORATION UNTIL USE. FAILURE TO PROTECT MATERIALS MAY BE CAUSE OF REJECTION OF WORK.
17. ISOLATE DISSIMILAR METALS TO PREVENT GALVANIC CORROSION.
18. PROVIDE ATTACHMENT AND CONNECTION DEVICES AND METHODS FOR SECURING WORK PROPERLY AS IT IS INSTALLED: TRUE TO LINE AND LEVEL, PER CODE AND WITHIN RECOGNIZED INDUSTRY TOLERANCES IF NOT OTHERWISE INDICATED. ALLOW FOR EXPANSIONS AND WIDTHS IN EXPOSED WORK. ORGANIZED FOR BEST POSSIBLE VISUAL EFFECT. REFER QUESTIONABLE VISUAL-EFFECTS CHOICES TO ARCHITECT FOR FINAL DECISION.
19. VERIFY ALL DIMENSION AND SITE CONDITIONS BEFORE STARTING WORK. SHOULD A DISCREPANCY APPEAR IN THE SPECIFICATIONS OR DRAWINGS OR IN THE WORK DONE BY OTHERS FROM THE CONTRACT DOCUMENTS THAT AFFECT ANY WORK, NOTIFY THE ARCHITECT AT ONCE FOR INSTRUCTIONS ON HOW TO PROCEED. IF THE CONTRACTOR PROCEEDS WITH THE WORK AFFECTED WITHOUT INSTRUCTIONS FROM THE ARCHITECT, THE CONTRACTOR SHALL MAKE GOOD ANY RESULTING DAMAGE OR DEFECT.
20. DIMENSIONS:
    ALL DIMENSION SHALL HAVE PREFERENCE OVER SCALE. ALL DIMENSIONS ARE TO BE ROUGH UNLESS OTHERWISE NOTED. CEILING HEIGHT DIMENSIONS ARE FROM FINISH FLOOR TO FINISH FACE OF CEILING.
21. DETAILS MARKED "TYP" OR "TYPICAL" SHALL APPLY IN ALL CASES, UNLESS SPECIFICALLY INDICATED OTHERWISE. WHERE NO DETAIL IS SHOWN, CONSTRUCTION SHALL BE AS SHOWN FOR OTHER SIMILAR WORK.
22. ITEMS MARKED "O.F.C.I." REFER TO ITEMS FURNISHED BY OWNER AND INSTALLED AND CONNECTED BY THE CONTRACTOR (OWNER FURNISHED, CONTRACTOR INSTALLED).
23. ITEMS MARKED "O.F.O.I" REFERS TO ITEMS FURNISHED AND INSTALLED BY OWNER.
24. ALL WALLS, DOORS AND THEIR RELATED FRAMES AND WINDOWS AND THEIR RELATED FRAMES SHALL BE PLUMB AND STRAIGHT, TYPICAL.
25. MOUNTING HEIGHTS: WHERE MOUNTING HEIGHTS ARE NOT INDICATED, MOUNT INDIVIDUAL UNITS OF WORK AT MOUNTING HEIGHTS AS LISTED IN APPLICABLE CODE, ESPECIALLY CA TITLE 24. REFER QUESTIONABLE MOUNTING HEIGHT CHOICES TO ARCHITECT FOR FINAL DECISION.
26. SEALANT EXPOSED TO VIEW SHALL BE CUSTOM COLORS AS SELECTED BY THE ARCHITECT.
27. COORDINATE LOCATION OF SEALANT AND COMPATIBILITY OF SEALANTS WITH ADJACENT WORK, INCLUDING MATERIALS AND OTHER CONTIGUOUS SEALANTS.
28. MANUFACTURER'S INSTRUCTIONS: WHERE INSTALLATIONS INCLUDE MANUFACTURED PRODUCTS, COMPLY WITH MANUFACTURER'S APPLICABLE INSTRUCTIONS AND RECOMMENDATIONS FOR INSTALLATION, TO EXTENT THESE ARE MORE EXPLICIT OR MORE STRINGENT THAN REQUIREMENTS INDICATED IN CONTRACT DOCUMENTS.
29. NO PORTION OF THE WORK REQUIRING A SHOP DRAWING OR SAMPLE SUBMISSION SHALL BE COMMENCED UNTIL THE SUBMISSION HAS BEEN APPROVED BY ARCHITECT. ALL SUCH PORTIONS OF THE WORK SHALL BE DONE IN ACCORDANCE WITH THE APPROVED SHOP DRAWINGS AND SAMPLES.
30. ALL CEILING, FLOOR AND WALL DEMOLITIONS, PATCHING AND INSTALLATION SHALL BE COORDINATED WITH ELECTRICAL, MECHANICAL AND STRUCTURAL DRAWINGS.
31. PROVIDE LIGHTING IN AREAS CUSTOMARILY USED BY HUMAN BEINGS - SEE ELECTRICAL DRAWINGS.
32. ELECTRICAL DRAWINGS AND ENERGY CONSERVATION CALCS TO BE SUBMITTED TO AND APPROVED BY ELECTRICAL DIVISION PRIOR TO INSTALLATION.
33. EXIT SIGNS SHALL BE INTERNALLY OR EXTERNALLY ILLUMINATED. INTERNALLY ILLUMINATED EXIT SIGNS SHALL BE LISTED AND LABELED IN ACCORDANCE WITH UL 924 AND SHALL BE INSTALLED IN ACCORDANCE WITH THE MANUFACTURER'S INSTRUCTIONS AND CHAPTER 27. EXTERNALLY ILLUMINATED EXITS SIGNS SHALL COMPLY WITH THE GRAPHICS AND POWER SOURCE REQUIREMENTS IN SECTIONS 1011.5.1 AND 1011.5.3 RESPECTIVELY. WHEN THE FACE OF AN EXIT SIGN IS ILLUMINATED FROM AN EXTERNAL SOURCE, IT SHALL HAVE AN INTENSITY OF NOT LESS THAN 5-FOOT-CANDLES (54 LUX).
34. EGRESS DOORS OR GATES SHALL BE OPENABLE FROM THE EGRESS SIDE WITHOUT THE USE OF A KEY, SPECIAL KNOWLEDGE, OR EFFORT. DOOR HANDLES, PULLS, LATCHES, LOCKS, AND OTHER OPERATING DEVICES SHALL BE INSTALLED 34 TO 48 IN. ABOVE THE FINISHED FLOOR. MANUALLY OPERATED FLUSH BOLTS OR SURFACE BOLTS ARE NOT PERMITTED. THE UNLATCHING OF ANY DOOR OR LEAF SHALL NOT REQUIRE MORE THAN ONE OPERATION.
35. THE EXIT SIGNS SHALL ALSO BE CONNECTED TO AN EMERGENCY ELECTRICAL SYSTEM WHICH IS TO PROVIDE CONTINUED ILLUMINATION FOR A DURATION OF NOT LESS THAN 1-1/2 HR. IN CASE OF PRIMARY POWER LOSS. CONTINUED ILLUMINATION IS TO BE PROVIDED FROM STORAGE BATTERIES, UNIT EQUIPMENT, OR AN ON-SITE GENERATOR AND THE INSTALLATION OF THE EMERGENCY POWER SYSTEM SHALL BE INSTALLED IN ACCORDANCE WITH CHAPTER 27.
36. EMERGENCY LIGHTING FACILITIES SHALL BE ARRANGED TO PROVIDE INITIAL ILLUMINATION THAT IS AT LEAST AN AVERAGE OF 1-FOOT-CANDLE (11 LUX) AND A MINIMUM AT ANY POINT OF 0.1-FOOT-CANDLE (1 LUX) MEASURED ALONG THE PATH OF EGRESS AT FLOOR LEVEL. A MAXIMUM-TO-MINIMUM ILLUMINATION UNIFORMITY RATIO OF 40 TO 1 SHALL NOT BE EXCEEDED.

## PROJECT DIRECTORY

**PROPERTY OWNER**
CITY OF BEVERLY HILLS -Project Administration
ATTN: CHARLES ACKERMAN - PROJECT MANAGER
345 FOOTHILL ROAD
BEVERLY HILLS CA. 90210
PHONE: 310.285.1188
FAX: 310.273.1096

**ARCHITECT**
RTK ARCHITECTS INC.
ATTN: MANDANA MOTAHARI, AIA
3975 LANDMARK STREET SUITE 400
CULVER CITY, CA 90232
PHONE: 310.837.3606
FAX: 310.937.6341

**CVIL ENGINEER**
BRANDOW & JOHNSTON, INC.
ATTN: ORLANDO MORENO, P.E.
700 SOUTH FLOWER STREET, SUITE 1800
LOS ANGELES, CA. 90017
PHONE: 213.596.4609
FAX: 213.596.4599

**LANDSCAPE ARCHITECTS**
KSA DESIGN STUDIO
ATTN: SHARN STINSON-URE
4212 1/2 GLENCOE AVENUE
MARINA DEL REY, CA 90292
PHONE: 310.574.4460 X224

## PROJECT DATA

**ADDRESS:**
344 FOOTHILL ROAD BEVERLY HILLS, CA 90210

**LEGAL DESCRIPTION:**
ASSESSOR ID NO. 432-009-906 (WESTERN PORTION ONLY)

**ZONING:** C-5 (COMMERCIAL ZONE)

## SCOPE OF WORK

- 23,703 SQ.FT. SITE IMPROVEMENTS, INCLUDING NEW SITE GRADING, NEW YARDS WALL & LANDSCAPING.
- DEMOLITION, REMEDIATION AND ROUGH GRADING IS UNDER A SEPARATE CONTRACT AND WILL BE PERFORMED BY OTHERS. SITE WILL BE READY FOR FINISH GRADING AND THE REMAINDER OF THE WORK SHALL BE PERFORMED BY THIS CONTRACT.
- UNDERGROUND UTILITIES WITH THE EXCEPTION OF IRRIGATION LATERAL LINES IS UNDER SEPARATE CONTRACT & WILL BE PERFORMED BY OTHERS. POINT OF CONNECTIONS TO PLUMBING FIXTURES SHALL BE INCLUDED AS PART OF THIS CONTRACT.

## SPECIAL INSPECTION ITEMS:

1) Concrete over 2,500 psi (per CBC 1705.3)
   a. Placement of reinforcing steel - periodic
   b. Formwork - periodic
   c. Placement of concrete and sampling - continuous
2) Masonry (per CBC 1705.4)
   a. Continuous Inspection
   i. Grout space prior to grouting
   ii. Anchors (if any)
   iii. Size, grade and type of reinforcing and any anchors
   iv. Preparation of samples
   b. Periodic Inspection
   i. Compressive strength f'm
   ii. Proportioning of mortar, construction of mortar joints
   iii. Location of reinforcement and anchors
3) Post-installed anchors
4) Soils (per CBC 1705.6)
   a. Continuous inspection of proper materials, densities and lift thicknesses during placement and compaction of compacted fill.
   b. Periodic inspection of
   i. Material below shallow foundations to achieve design bearing capacity
   ii. Depth of excavations
   iii. Classification and testing of compacted fill materials
   iv. Subgrade prior to placement of compacted fill

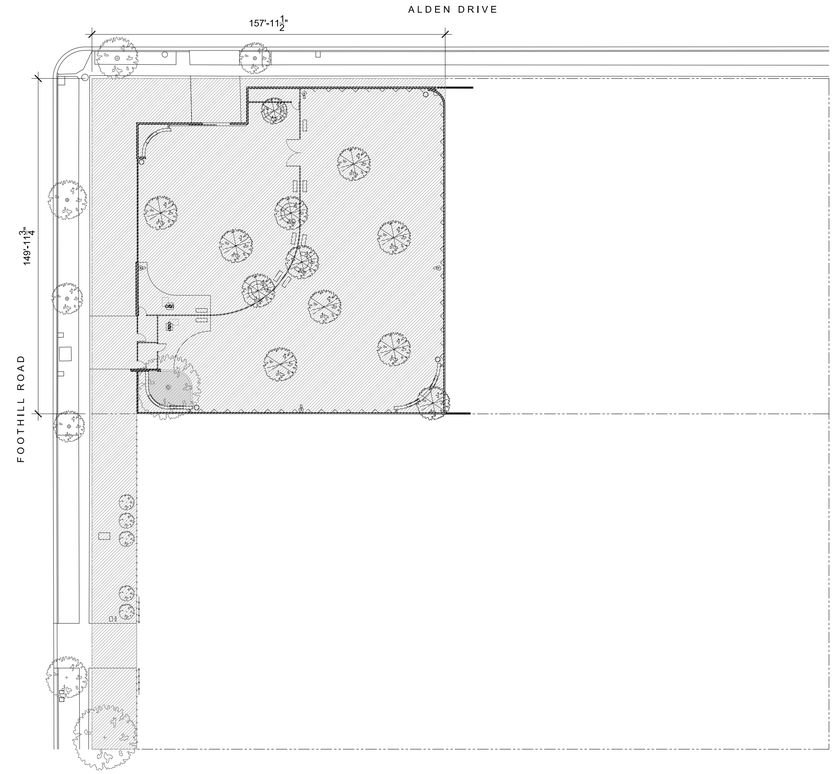


**LEGEND**
WORK AREA

KEY PLAN
SCALE: 1/32" = 1'-0"
1

## DRAWING INDEX

| SHEET # | SHEET TITLE | 02/12/16 - 50% CD | 02/29/16 - REVISED 50% CD | 03/22/16 - REVISED 50% CD (BUDGETARY ESTIMATE) | 03/22/16 - DEMO PACKAGE | 04/12/16 - PHASE 1: BID SET | 05/02/16 - PHASE 2: BID SET |
|---|---|---|---|---|---|---|---|
| ARCHITECTURAL | | | | | | | |
| T-1 | PROJECT DATA, PROJECT DIRECTORY, SHEET INDEX, GENERAL NOTES, VICINITY MAP, SYMBOLS & ABBREVIATIONS | ● | ● | ● | ● | ● | ● |
| A-0.0 | PRELIMINARY UTILITY PLAN (FOR REFERENCE ONLY) | ● | ● | ● | ● | | |
| A-0.1 | CITY OF BEVERLY HILLS NOTES & FORMS & ADA DIAGRAMS | | | | | ● | ● |
| A-1.0 | EXISTING / DEMOLITION SITE PLAN | ● | ● | ● | ● | ● | ● |
| A-1.1 | FOUNDATION PLAN | | | | | ● | ● |
| A-2.0 | PROPOSED SITE PLAN | ● | ● | ● | ● | ● | ● |
| A-2.0ALT | PROPOSED SITE PLAN (ALTERNATES) | | ● | ● | | | |
| A-3.0 | ENLARGED PLANS | ● | ● | ● | | ● | ● |
| A-4.0 | SITE ELEVATIONS | ● | ● | ● | | ● | ● |
| A-5.0 | DETAILS | ● | ● | ● | ● | ● | ● |
| A-5.1 | DETAILS | ● | ● | ● | ● | ● | ● |
| A-5.2 | DETAILS | | | | | ● | ● |
| | SURVEY | | | ● | | ● | ● |
| | | | | | | | |
| CIVIL | | | | | | | |
| C-1.01 | TITLE SHEET & GENERAL NOTES | | | | | ● | ● |
| C-2.01 | DETAILS | | | | | ● | ● |
| C-2.02 | DETAILS | | | | | ● | ● |
| C-3.01 | GRADING PLAN | ● | ● | ● | ● | ● | ● |
| C-3.02 | EXCAVATION PLAN | | | | ● | ● | ● |
| C-4.01 | SITE UTILITY PLAN | | | | | ● | ● |
| C-5.01 | EROSION CONTROL PLAN | | | | ● | ● | ● |
| | | | | | | | |
| LANDSCAPING | | | | | | | |
| L-0.0 | COVER SHEET / GENERAL NOTES | | | | | ● | ● |
| L-2.0 | PLANTING PLAN | ● | ● | ● | | ● | ● |
| L-3.0 | PLANTING SCHEDULE | | | | | ● | ● |
| L-3.1 | PLANTING DETAILS | | | | | ● | ● |
| LI-3.0 | IRRIGATION PLAN | | | | | ● | ● |
| LI-3.1 | IRRIGATION NOTES | | | | | ● | ● |
| LI-3.2 | IRRIGATION DETAILS | | | | | ● | ● |
| LI-3.3 | IRRIGATION DETAILS | | | | | ● | ● |
| LI-3.4 | IRRIGATION WATER CALCULATIONS | | | | | ● | ● |
| PLUMBING | | | | | | | |
| P-1.0 | PLUMBING SITE PLAN | | | | | ● | ● |
| ELECTRICAL | | | | | | | |
| E-1.0 | ELECTRICAL SITE PLAN | | | | | ● | ● |
| LIGHTING | | | | | | | |
| LT-1 | EXISTING LIGHT LEVEL PLAN & REPORTS | ● | ● | ● | | | |
| LT-2 | LIGHTING PLAN WITH NEW PHOTOMETRIC | | | | | ● | ● |

## ABBREVIATIONS

AB = ANCHOR BOLT
ABV = ABOVE
ADJ. = ADJACENT
A F F = ABOVE FINISH FLOOR
ALUM = ALUMINUM
ARCH = ARCHITECTURAL DRAWINGS
AVG = AVERAGE

B / BOT = BOTTOM
BD = BOARD
BLDG = BUILDING
BLK (G) = BLOCK(ING)
BLW = BELOW
BM = BEAM
BR = BED ROOM
BRG = BEARING
BYD = BEYOND

CB = CATCH BASIN
C.I.P. = CAST IN PLACE
CL = CENTERLINE
CLG = CEILING
CLR = CLEAR
C M U = CONCRETE MASONRY UNIT
COL = COLUMN
CONC = CONCRETE
CONST = CONSTRUCTION
CONT = CONTINUOUS (LY)
CTR (D) = CENTER (ED)
CTRL. BD. = CONTROL BOARD
CTSK = COUNTER SUNK

D / DIAM = DIAMETER
DBL = DOUBLE
DET = DETAIL
DIM = DIMENSION
DWG (S) = DRAWING(S)

(E) = EXISTING
EA = EACH
EL / ELEV = ELEVATION
ELECT = ELECTRICAL (DWGS)
EQ = EQUAL
EXT = EXTERIOR

FIN = FINISH
FLR = FLOOR
F O W = FACE OF WALL
FRMG = FRAMING
FTG = FOOTING

GA = GAUGE
GALV = GALVANIZED
GEN = GENERAL
GR = GRADE
GWB = GYPSUM WALLBOARD
GYP = GYPSUM
HDR = HEADER
HT = HEIGHT

INFO = INFORMATION
INSUL = INSULATION
INT = INTERIOR
INV = INVERTED

JST = JOIST
JT = JOINT

L = ANGLE
LDW = LESS DOOR WIDTH

MAX = MAXIMUM
MECH = MECHANICAL
MIN = MINIMUM
MIR = MIRROR(ED)
MTD = MOUNTED
MTL = METAL

N/A = NOT APPLICABLE
N.I.C.= NOT INCLUDED IN CONTRACT
(N) = NEW
NAT = NATURAL
NLG = NAILING
NO.= NUMBER
NTS = NOT TO SCALE

O C = ON CENTER
OPP = OPPOSITE

PLT = PLATE
PSF = POUNDS PER SQ. FOOT
PSI = POUNDS PER SQ. INCH
PTD = PAINTED
PLY = PLYWOOD

RCP = REFLECTED CEILING PLAN

REQ'D = REQUIRED
RET = RETAINING

SHT = SHEET(S)
SHTG = SHEATHING
SIM = SIMILAR
SPC(G) = SPACE(ING)
ST STL = STAINLESS STEEL
STAGG = STAGGERED
STD = STANDARD
STL = STEEL
STRUCT = STRUCTURE

T.B. = TO BE
TBS = TO BE SPECIFIED
TEMP = TEMPERED
T G = TEMPERED GLASS
T O = TOP OF
T S = TUBULAR STEEL
TYP = TYPICAL(LY)

U N O = UNLESS NOTED OTHERWISE

V / VERT = VERTICAL(LY)
V I F = VERIFY IN FIELD

WD = WOOD
W/ = WITH

Ø = ROUND OR DIAMETER
# = NUMBER

## SYMBOLS LEGEND

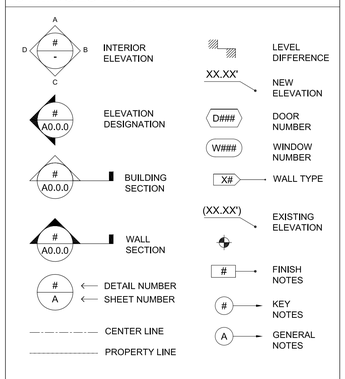


## VICINITY MAP

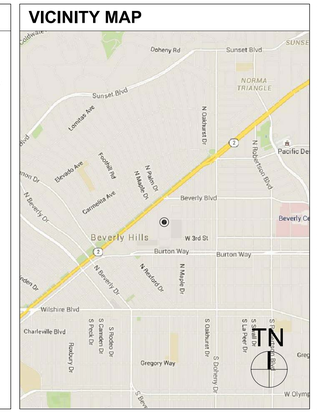


RTK
RTK Architects, Inc.
Architecture • Planning • Interior
www.rtkarchitects.com
3975 Landmark St. Ste.#400 Culver City, CA 90232 310 / 837-3606

| Revision | No. | Date | By |
|---|---|---|---|
| | | | |

BID SET
Job No. 1511800
Submittal
Issue Date 4/12/16
Drawn By
Checked By

KEY PLAN, GEN. NOTES, SHEET INDEX, PROJECT DATA

CITY OF BEVERLY HILLS DOG PARK
344 FOOTHILL ROAD
BEVERLY HILLS, CA 90210

T-1
5/2/16

## CITY OF BEVERLY HILLS BUILDING & SAFETY GENERAL NOTES

CITY OF BEVERLY HILLS | BUILDING & SAFETY DIVISION
GENERAL NOTES

**THE FOLLOWING GENERAL NOTES SHALL BE MADE PART OF THE PLANS:**

1. CONSTRUCTION IS ALLOWED BETWEEN THE HOURS OF 8:00 AM AND 6:00 PM, MONDAY THROUGH FRIDAY, AND IS PROHIBITED ON PUBLIC HOLIDAYS.
2. CONSTRUCTION-RELATED PARKING IS NOT ALLOWED ON A PUBLIC STREET, UNLESS OTHERWISE APPROVED AND PERMITTED BY THE BUILDING OFFICIAL. A CONSTRUCTION PARKING PLAN SHALL BE PREPARED AND SUBMITTED TO THE DEPARTMENT FOR REVIEW AND APPROVAL; ONCE APPROVED, THE PLAN MUST BE MADE PART OF FINAL DRAWINGS. SAMPLE CONSTRUCTION-RELATED PARKING PLAN
3. "NOTICE OF PENDING DEMOLITION/CONSTRUCTION" SHALL BE POSTED ON CONSTRUCTION FENCE AT LEAST 10 DAYS PRIOR TO START OF ANY WORK AND MAINTAINED DURING THE ENTIRE COURSE OF CONSTRUCTION. (A DIGITAL PHOTO MUST BE PRESENTED AS PROOF OF POSTING) THE SIGN SHALL BE OBTAINED FROM THE PLAN REVIEW ENGINEER OR THE BUILDING INSPECTOR IN THE BUILDING AND SAFETY DIVISION.
4. TILE SEWER MAY NOT BE COVERED BY NEW CONSTRUCTION.
5. BUILDINGS LOCATED IN VERY HIGH FIRE HAZARD SEVERITY ZONE (NORTH OF SUNSET), SHALL HAVE THEIR EXTERIOR WALLS AND EAVES CONSTRUCTED OF ONE-HOUR FIRE RESISTIVE CONSTRUCTION.
6. AN AUTOMATIC FIRE SPRINKLER SYSTEM SHALL BE INSTALLED IN ALL NEW BUILDINGS IN ACCORDANCE WITH NFPA 13. EXISTING BUILDINGS SHALL BE PROVIDED WITH SPRINKLER SYSTEM WHEN THE COST OF THE ADDITIONS, ALTERATIONS OR REPAIRS MADE TO THE BUILDING EXCEEDS 50% OF THE REPLACEMENT VALUE OF THE EXISTING STRUCTURE. (SECTION 9-2-2 OF ARTICLE 1 OF CHAPTER 2 OF TITLE 9 OF B.H.M.C.)
7. A PRE-CONSTRUCTION MEETING WITH THE CITY AND THE PROJECT TEAM (CONTRACTOR, OWNER, ENGINEER OR ARCHITECT) IS REQUIRED PRIOR TO BEGINNING ANY NEW CONSTRUCTION OR WHEN REQUIRED BY THE CITY. THE "PRE-CONSTRUCTION MEETING TOPICS" SHALL BE MADE PART OF PLANS, AND SIGNED BY ALL PARTIES AT THE MEETING. PRE-CONSTRUCTION MEETING AGENDA
8. ALL CONSTRUCTION PROJECTS SHALL COMPLY WITH THE "BEST MANAGEMENT PRACTICES" OUTLINED IN "ATTACHMENT A," FOR "STORM WATER POLLUTION CONTROL" AND "MINIMUM WATER QUALITY PROTECTION" REQUIREMENTS.
9. SOUND LEVEL OF OPERATING EQUIPMENT (E.G. POOL EQUIPMENT, H.V.A.C.) IS LIMITED TO FIVE (5) DECIBELS ABOVE THE AMBIENT NOISE LEVEL MEASURED AT THE PROPERTY LINE. (B.H.M.C. ARTICLE 4, CHAPTER 8).
10. ALL ROOF ASSEMBLIES OR ROOF COVERING MATERIAL SHALL BE CLASS A FIRE RETARDANT. NO WOOD ROOF SHALL BE PERMITTED AS ROOF COVERING MATERIAL.
11. FOR ALL NEW CONSTRUCTION AND WHEN REQUIRED BY THE CITY, A LICENSED SURVEYOR MUST CERTIFY THAT THE LOCATION OF THE FOOTING FORMS IS PER THE APPROVED PLANS BEFORE FOUNDATIONS CAN BE POURED. THE SURVEYOR MUST PROVIDE A PLOT PLAN SHOWING PRECISE DIMENSIONS TO THE PROPERTY LINES AND THE ELEVATION OF THE FORMS AS COMPARED WITH THE REFERENCE ELEVATION SHOWN ON THE APPROVED PLANS.
12. FOR ALL NEW CONSTRUCTION, AND WHEN REQUIRED BY THE CITY, A LICENSED SURVEYOR MUST CERTIFY THAT THE HEIGHT OF THE BUILDING IS IN ACCORDANCE WITH THE APPROVED PLANS. THE SURVEYOR MUST SHOW THE PRECISE HEIGHT OF THE BUILDING AS COMPARED WITH THE REFERENCE ELEVATION SHOWN ON THE APPROVED PLANS.
13. AN ACCURATE PLOT/SITE PLAN IS REQUIRED WITH EVERY PROJECT SUBMITTED FOR PLAN CHECK. THE PLOT/SITE PLAN SHALL BE DRAWN TO SCALE AND SHALL IDENTIFY ALL BUILDINGS AND IMPROVEMENTS ON SITE. THE PLAN MUST SHOW THE REQUIRED AND ACTUAL SETBACKS OF THE BUILDINGS FROM THE ADJOINING PROPERTY LINES OR PUBLIC RIGHT OF WAYS. THE PLOT/SITE PLAN SHALL ALSO INDICATE THE APPROXIMATE LOCATION OF THE BUILDINGS, STRUCTURES AND IMPROVEMENTS ON ADJOINING PROPERTIES WITHIN 15 FEET OF THE SUBJECT SITE.
14. TEMPORARY TOILET FACILITIES ARE REQUIRED DURING CONSTRUCTION. BEFORE THE START OF CONSTRUCTION OF ANY BUILDING OR STRUCTURE, AND BEFORE ANY REMODEL WHERE ALL TOILET FACILITIES ARE TEMPORARILY REMOVED, A TEMPORARY WATER-FLUSHED OR APPROVED CHEMICAL TOILET SHALL BE INSTALLED FOR USE BY THE WORKERS AND SHALL COMPLY WITH ALL OF THE FOLLOWING REQUIREMENTS:
    I) SUCH TEMPORARY TOILET SHALL BE MAINTAINED THROUGHOUT THE CONSTRUCTION OF THE BUILDING OR STRUCTURE;
    II) IF A WATER-FLUSHED TOILET IS USED, SUCH TOILET SHALL BE CONNECTED TO THE SEWER, AND TILE PIPE WITHOUT A VENT MAY BE USED FOR THE INSTALLATION;
    III) SUCH TEMPORARY TOILET SHALL BE LOCATED WITHIN TWENTY-FIVE (25') FEET OF THE REAR PROPERTY LINE AND SHALL BE SET BACK AT LEAST TWENTY (20) FEET FROM ANY OTHER PROPERTY LINE UNLESS THE CITY BUILDING OFFICIAL APPROVES AN ALTERNATE LOCATION BECAUSE THE REQUIREMENTS OF THIS SUBSECTION PREVENT SERVICING THE TOILET OR ARE OTHERWISE INFEASIBLE; AND
    IV) SUCH TEMPORARY TOILET SHALL NOT BE LOCATED ON PUBLIC PROPERTY WITHOUT THE APPROVAL OF THE DIRECTOR OF PUBLIC WORKS.
15. AN APPROVED WEATHERPROOFING CONSULTANT MUST CERTIFY THE INSTALLATION OF WEATHERPROOFING ON ALL RETAINING WALLS WHICH ARE ADJACENT TO INTERIOR AREAS OF THE BUILDING. THE CONSULTANT WILL NOT BE REQUIRED IF THE INSTALLER IS CERTIFIED IN WRITING BY THE MANUFACTURER.
16. FOR ALL NEW CONSTRUCTION AND WHEN REQUIRED BY THE CITY, AN APPROVED WEATHERPROOFING CONSULTANT MUST CERTIFY THAT THE WEATHERPROOFING ELEMENTS OF THE BUILDING HAVE BEEN INSTALLED IN ACCORDANCE WITH THE APPROVED PLANS, ALL RELEVANT CODES, AND PER MANUFACTURERS SPECIFICATIONS. AT A MINIMUM, AN INSPECTION AND REPORT WILL BE REQUIRED BEFORE PLASTERING BEGINS AND BEFORE FINAL APPROVAL IS GRANTED.
17. PRIOR TO FINAL APPROVAL, A CERTIFIED AIR BALANCER MUST PROVIDE A WRITTEN REPORT SHOWING THE AIR VOLUMES FOR ALL ELEMENTS OF A COMMERCIAL GARAGE EXHAUST SYSTEM OR A COMMERCIAL KITCHEN HOOD SYSTEM.
18. FOUNDATION EXCAVATIONS SHALL BE INSPECTED AND APPROVED BY THE GEOTECHNICAL ENGINEER PRIOR TO REQUESTING CITY INSPECTION. THE GEOTECHNICAL ENGINEER SHALL PREPARE AND LEAVE A FIELD REPORT FOR THE CITY INSPECTOR.
19. PRIOR TO FINAL APPROVAL, THE CITY MUST WITNESS A TEST OF ALL FIRE SMOKE DAMPERS.
20. WATER CONSERVATION PLUMBING FIXTURES ARE REQUIRED FOR ALL NEW AND REPLACEMENT SHOWERHEADS, FAUCETS, TOILETS, AND URINALS.
21. WATER EFFICIENT LANDSCAPING AND SMART IRRIGATION CONTROLLERS SHALL BE INSTALLED:
    I) WHENEVER LANDSCAPE AREA EXCEEDS 2500 SQUARE FEET.
    II) WHEN EXISTING LANDSCAPING IS ALTERED BY MORE THAN 50% AND IS MORE THAN 2500 SQUARE FEET.
22. REVISIONS AND DETAIL CHANGES PROPOSED ON A PROJECT AFTER THE BUILDING PERMIT IS ISSUED SHALL BE COORDINATED AND COMMUNICATED WITH THE CITY'S PROJECT PLAN REVIEW ENGINEER/ARCHITECT (PRE). REVISIONS AND DETAIL CHANGES SHALL BE REVIEWED AND APPROVED BY THE PRE PRIOR TO REQUESTING AN INSPECTION. APPOINTMENTS ARE REQUIRED TO BE MADE WITH THE PRE TO REVIEW THE REVISED PLANS (ADDITIONAL REVIEW FEES MAY APPLY).
23. THE PROJECT ARCHITECT, ENGINEER, AND APPLICANT UNDERSTAND THAT THEIR POINT OF CONTACT IS THE CITY'S PLAN REVIEW ENGINEER/ARCHITECT (PREA) FOR THE DURATION OF THE PROJECT. ALL RELATED PROJECT PLAN REVISIONS, OR PROPOSED NEW STRUCTURES, (E.G. DETACHED GARAGE, GUEST HOUSE, ACCESSORY STRUCTURE, POOL, FENCE/WALLS, AND PAVING ETC...) SHOULD BE DIRECTED TO THE CITY'S PREA. THE ARCHITECT SHOULD CONTACT THE PREA USING THEIR DIRECT TELEPHONE NUMBER IN ORDER TO MAKE AN OFFICE APPOINTMENT.
24. ALL PLANNING DIVISION APPROVAL LETTERS, RESOLUTIONS, AND CODITIONAL APPROVALS SHALL BE MADE PART OF PLANS. THE FINAL SET OF PLANS SHALL BEAR THE STAMP AND SIGNATURE OF THE PLANNING DIVISION INDICATING COMPLIANCE AND CONFORMITY WITH THE CONDITIONS OF APPROVAL OF THE PROJECT, PRIOR TO APPLYING FOR THE BUILDING PERMIT.
25. A DIGITAL COPY OF "AS-BUILT" PLANS SHALL BE SUBMITTED TO THE BUILDING INSPECTOR PRIOR TO REQUESTING FOR FINAL INSPECTION. THE "ARCHITECT AND/OR REGISTERED PROFESSIONAL'S CERTIFICATION FORM" SHALL BE COMPLETED AND MADE PART OF THE PLANS AS A CONDITION OF THE BUILDING PERMIT ISSUANCE. PLEASE USE THE FOLLOWING LINK TO ACCESS THE FORM: AGREEMENT TO PROVIDE DIGITAL FORMAT PLANS
26. THE BUILDING INSPECTION RECORD MUST BE PLACED ON THE FIRST SHEET OF THE PLANS AS A CONDITION OF CITY APPROVAL. PLAN PREPARERS (ARCHITECTS, DRAFTSPERSONS, DESIGNERS AND ENGINEERS) SHOULD VISIT THE BUILDING AND SAFETY WEBPAGE TO DOWNLOAD A COPY OF THE BUILDING INSPECTION RECORD AND COPY IT TO THE FIRST SHEET OF THE PLANS FOR PERMANENT RECORD. FAILURE TO INCLUDE THE BUILDING INSPECTION RECORD ON PLANS SUBMITTED FOR APPROVAL WILL RESULT IN A CORRECTION GIVEN TO THE APPLICANT TO RETURN THE PLANS TO THE PREPARER TO INCLUDE THE DOCUMENT AS PART OF THEIR PLANS.
27. CONSTRUCTION FIELD REPORTS MUST BE SUBMITTED ELECTRONICALLY VIA EMAIL TO FIELDREPORTS@BEVERLYHILLS.ORG.

ELECTRONIC DOCUMENT SUBMITTAL - TWO STEP PROCESS

STEP 1. ATTACH YOUR ADOBE PDF FIELD REPORT DOCUMENT TO AN EMAIL WITH THE FOLLOWING INFORMATION:
- I) PROJECT ADDRESS
- II) PERMIT NUMBER
- III) CONTACT INFORMATION
- IV) IDENTIFY THE DOCUMENT TYPE (STRUCTURAL OBSERVATION, DEPUTY INSPECTION REPORT, ETC.)

STEP 2. SEND THE EMAIL WITH THE ATTACHED FILES TO THE BUILDING AND SAFEY DIVISIONTO FIELDREPORT@BEVERLYHILLS.ORG.

ACCEPTED ELECTRONIC FIELD REPORTS
- I) SURVEYS OF PROPERTY LINES, STRUCTURE HEIGHTS (ELEVATIONS), EASEMENTS, AND SETBACKS
- II) WATERPROOFING CERTIFICATE OF INSTALLATION
- III) STRUCTURAL OBSERVATIONS
- IV) GEO-TECHNICAL & SOIL REPORTS
- V) DEPUTY INSPECTOR REPORTS
- VI) ARCHITECT AS-BUILT CERTIFICATION
- VII) EVALUATION TESTING / LISTING REPORTS
- VIII) OTHER INSTALLATION CERTIFICATES (E.G. ENERGY, HERS RATING, AND CALGREEN COMPLIANCE FORMS)

## DIGITAL PLAN AGREEMENT FORM

GEORGE CHAVEZ, City Building Official
DAVID YELTON, Inspection & Plan Review Manager
NESTOR OTAZU, Community Preservation Manager

BUILDING & SAFETY DIVISION
455 North Rexford Drive, 1st Floor
Beverly Hills, CA 90210
Tel. (310) 285-1141
Fax (310) 273-0972

AGREEMENT TO PROVIDE DIGITAL-FORMAT PLANS

I, the undersigned, agree to the following:

*Upon completion of construction, and prior to final building inspection, digital-format plans shall be submitted to the City of Beverly Hills for the below referenced construction project, shall be in compliance with all City zoning and building codes, and shall be congruent with any "wet-stamped" paper format plans approved and issued by the City of Beverly Hills' Community Development Department.*

PROJECT ADDRESS: 344 Foothill Road

PROJECT NUMBER: 1511800

PROJECT DESCRIPTION: City of Beverly Hills Dog Park

Mandana Motahari
Professional of Record (Printed Name)

______________________
Professional of Record (Signature)

3975 Landmark St. Ste.#400 Culver City, CA 90232
Professional of Record's Mailing Address

mmotahari@rtkarchitects.com
Professional of Record's E-Mail Address

310) 837-3606
Professional of Record's Phone Number

I:\Building and Safety\Public Info-Handout Committee\D_Published Handouts\Pre construction affidavit to provide digital format plans.docx

## ADA DIAGRAMS & NOTES

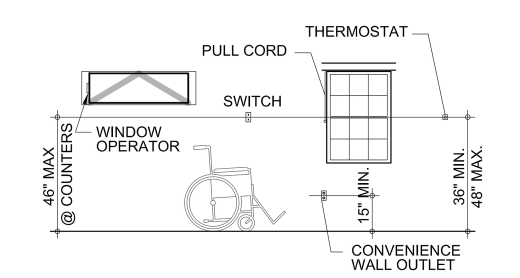


CONTROLS, SWITCHES AND OUTLETS HEIGHTS (A)
SCALE : N.T.S.

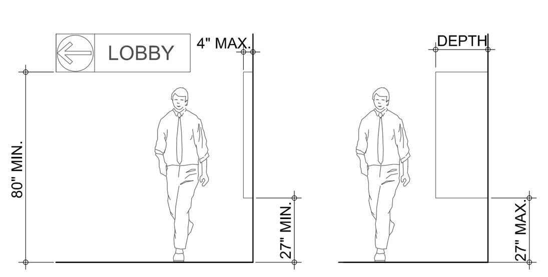


WALKING PARALLEL TO WALL (B)
SCALE : N.T.S.

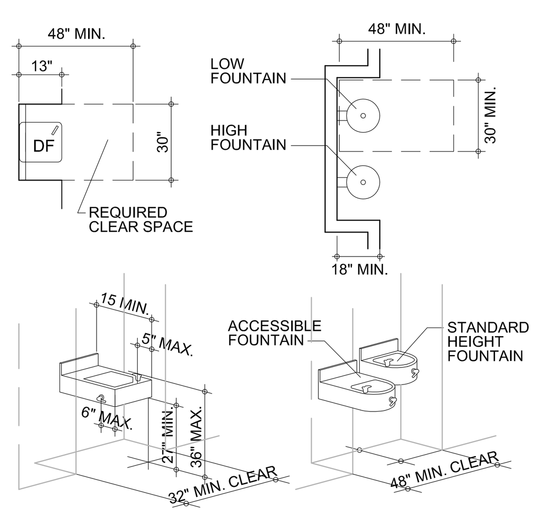


AT ALCOVES DEEPER THAN 24" ADDITIONAL 6" MANEUVERING CLEARANCE IS REQUIRED. SEE CBC 1118B.4, ITEM 2

AT "HI-LOW" TYPE FOUNTAINS, CENTER THE 30" BY 48" CLEAR FLOOR SPACE ON THE "LOW" FOUNTAIN FIXTURE

DRINKING FOUNTAIN ALCOVE INSTALLATION (C)
SCALE : N.T.S.

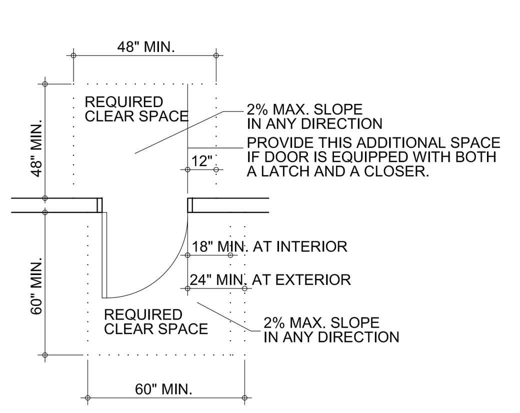


LEVEL MANEUVERING DOOR CLEARANCES (D)
SCALE : N.T.S.

1. CHARACTER TYPE :
   CHARACTERS ON SIGN SHALL BE RAISED 1 / 32 INCH (0.794 mm) MINIMUM AND SHALL BE SANS SERIF UPPERCASES CHARACTERS ACCOMPANIED BY GRADE 2 BRAILLE (see note 5 below).
2. CHARACTER SIZE :
   RAISED CHARACTERS SHALL BE MINIMUM OF 5/8 INCH (15.9 mm) AND MAXIMUM OF 2 INCHES (51 mm) HIGH.
3. FINISH AND CONTRAST :
   CONTRAST BETWEEN CHARACTERS, SYMBOLS AND THEIR BACKGROUND MUST BE 70% MINIMUM AND HAVE A NON- GLARE FINISH. 1117B.5.2
4. PROPORTIONS :
   CHARACTERS ON SIGN SHALL HAVE A WIDTH TO HEIGHT RATIO OF BETWEEN 3:5 AND 1:1 AND A STROKE WIDTH TO HEIGHT RATIO OF BETWEEN 1:5 AND 1:10. 1117B.5.3

   ALL LETTERS MEASURED MUST BE UPPERCASE. AFTER CHOOSING A TYPE STYLE TO TEST. BEGIN BY PRINTING THE LETTERS I, X, AND O, AT 1 INCH HIGH. PLACE THE TEMPLATE'S 1 : 1 SQUARE OVER THE X OR O, WHICHEVER IS NARROWER. IF THE CHARACTER IS NOT WIDER THAN 1 INCH. NOR NARROWER THAN 3 : 5 RECTANGLE, THE PROPORTIONS ARE CORRECT. USE THE 1 : 5 RECTANGLE TO DETERMINE IF THE STROKE OF THE I IS TOO BROAD, AND THE 1 : 10 RECTANGLE TO SEE IF IT IS TOO NARROW. IF ALL THE TESTS ARE PASSED. THE TYPE STYLE IS COMPLIANT WITH PROPORTION CODE.

   TEMPLATE FOR CHECKING CHARACTERS AND STROKE WITH TO HEIGHT PROPORTIONS:

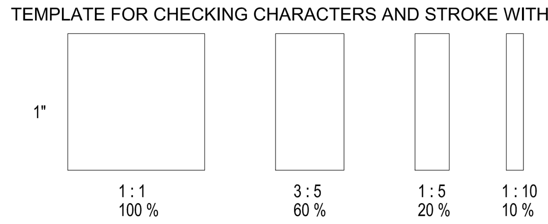


5. BRAILLE :
   CALIFORNIA GRADE 2 BRAILLE SHALL BE USED WHEREVER BRAILLE IS REQUIRED. IN OTHER PORTIONS OF THESE STANDARDS. DOTS SHALL BE 1/10 INCH (2.54 mm) ON CENTERS IN EACH CELL WITH 2/10 INCH (5.08mm) SPACE BETWEEN CELLS. MEASURED M THE SECOND COLUMN OF DOTS IN THE FIRST CELL TO THE FIRST COLUMN OF DOTS IN THE SECOND CELL. DOTS SHALL BE RAISED A MINIMUM OF 1/40 INCH (0.635mm) ABOVE THE BACKGROUND. 1117B.5.6

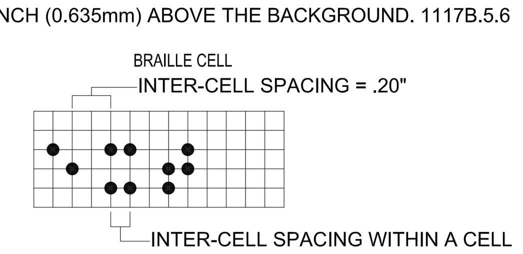


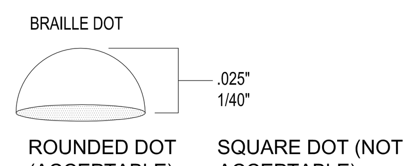


RECOMMEND ROUNDED OR DOMED CALIFORNIA BRAILLE DOTS. EACH DISTINCT AND SEPARATE. DOTS WITH STRAIGHT SIDES AND FLAT TOPS ARE NOT READABLE FOR MANY BRAILLE USERS.

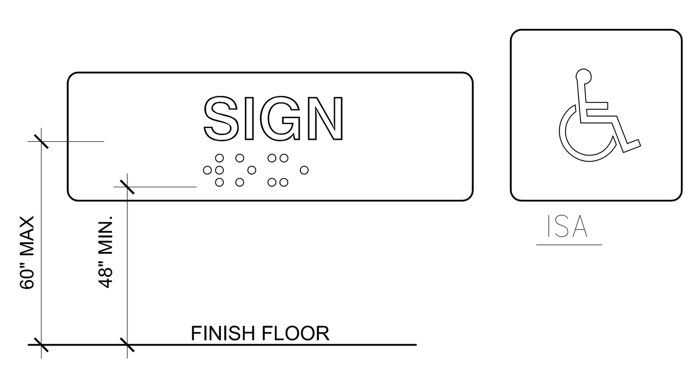


INTERNATIONAL SYMBOL OF ACCESSIBILITY (E)
SCALE : N.T.S.

## GREEN BUILDING FORMS

CITY OF BEVERLY HILLS
Community Development Department
Building and Safety Division

455 North Rexford Drive, 1st Floor
Beverly Hills, CA 90210
Tel. (310) 285-1141
www.beverlyhills.org/buildingandsafety

WATER SAVINGS (WS)
BASELINE WATER USE WORKSHEET (WS-1)

BASELINE WATER USE CALCULATION TABLE

| Fixture Type | Quantity | Flow-rate (gpm) | Duration | Daily uses | Occupants | Gallons per day |
|---|---|---|---|---|---|---|
| Showerheads | | 2.5 | 5 min. | 1 | | |
| Showerheads Residential | | 2.5 | 8 min. | 1 | | |
| Lavatory Faucets Residential | | 2.2 | .25 min. | 3 | | |
| Kitchen Faucets | | 2.2 | 4 min. | 1 | | |
| Replacement Aerators | | 2.2 | | | | |
| Wash Fountains | | 2.2 | | | | |
| Metering Faucets | | 0.25 | .25 min. | 3 | | |
| Metering Faucets for Wash Fountains | | 2.2 | .25 min. | | | |
| Gravity tank type Water Closets | | 1.6 | 1 flush | [illegible] | | |
| Flushometer Tank Water Closets | | 1.6 | 1 flush | [illegible] | | |
| Flushometer Valve Water Closets | | 1.6 | 1 flush | [illegible] | | |
| Electromechanical Hydraulic Water Closets | | 1.6 | 1 flush | [illegible] | | |
| Urinals | | 1.0 | 1 flush | 2 male | | |
| Total daily baseline water use (BWU) | | | | | | |

_______ (BWU) X .80 = _______ Allowable water use

[illegible footnotes]

Contractor (Documentation Author's) Responsible Designer's Declaration Statement
[illegible]

| Signature: | |
|---|---|
| Company: | Date: |
| Address: | License: |
| City/State/Zip: | Phone: |

**BEST MANAGEMENT PRACTICES**
**FOR CONSTRUCTION ACTIVITES***

**Storm Water Pollution Control Requirements for Construction Activities**
**Minimum Water Quality Protection Requirements for All Development Construction Projects/Certification Statement**

***The following is intended as minimum notes or as an attachment for building and grading plans and represent the minimum standards of good housekeeping that must be implemented on all construction sites regardless of size. (Applies to all permits)***

- Every effort should be made to eliminate the discharge of non-stormwater from the project site at all times.
- Eroded sediments and other pollutants must be retained on site and may not be transported from the site via sheetflow, swales, area drains, natural drainage courses or wind.
- Stockpiles of earth and other construction related materials must be protected from being transported from the site by the forces of wind or water.
- Fuels, oils, solvents and other toxic materials must be stored in accordance with their listing and are not to contaminate the soil and surface waters. All approved storage containers are to be protected from the weather. Spills must be cleaned up immediately and disposed of in a proper manner. Spills may not be washed into the drainage system.
- Excess or waste concrete may not be washed into the public way or any other drainage system. Provisions shall be made to retain concrete wastes on site until they can be disposed of as solid waste.
- Trash and construction related solid wastes must be deposited into a covered receptacle to prevent contamination of rainwater and dispersal by wind.
- Sediments and other materials may not be tracked from the site by vehicle traffic. The construction entrance roadways must be stabilized so as to inhibit sediments from being deposited into the public way. Accidental depositions must be swept up immediately and may not be washed down by rain or other means.
- Any slopes with disturbed soils or denuded of vegetation must be stabilized so as to inhibit erosion by wind and water.

"I certify that this document and all attachments were prepared under my direction or supervision in accordance with a system designed to ensure that qualified personnel properly gather and evaluate the information submitted. Based on my inquiry of the person or persons who manage the system or those persons directly responsible for gathering the information, to the best of my knowledge and belief, the information submitted is true, accurate, and complete. I am aware that submitting false and/or inaccurate information, failing to update the ESCP to reflect current conditions, or failing to properly and/or adequately implement the ESCP may result in revocation of grading and/or other permits or other sanctions provided by law."

Print Name ______________________
(Owner or authorized agent of the owner)

Signature ______________________ Date ____________
(Owner or authorized agent of the owner)

*The above Best Management Practices are detailed in the latest edition of the California BMP Handbook or Caltrans Stormwater Quality Handbooks.

## PRE-CONSTRUCTION MEETING TOPICS

Pre-Construction Meeting Topics

**I. General Information**
- a. Construction Work Hours
  Monday –Friday, 8:00 a.m. – 6:00 p.m. (Beverly Hills Municipal Code 5-1-206) Clean Jobsite
- b. Site Maintenance
  - i. Construction Project Daily Maintenance Checklist
- c. Maintenance of the Public Right-of-Way
- d. Tree protection requirements for City Trees
- e. Temporary Water Service & Dust Control
- f. Storm & Waste Water Ordinance/ Dumping in the Street
- g. Porta-Potty Location
- h. Temporary Power Poles
- i. Construction Company Signs
- j. Temporary Fencing & Property
- k. Attractive Nuisances
- l. Open Excavations / Existing Swimming Pools
- m. Fifty – Percent Jobs (Residential)
- n. Noise Ordinance
- o. Construction Parking Plan
- p. Notice of Demolition/Construction Signs
- q. City Observed Holidays – Construction is NOT ALLOWED
  1. New Year's Day
  2. Memorial Day
  3. Independence Day
  4. Labor Day
  5. Thanksgiving Day
  6. Christmas Day
  (Beverly Hills Municipal Code 5-1-206)

**II. Specific Requirements**
- a. Compliance of Resolution / Conditions of Approval
- b. Special Inspection Requirements
- c. Architect/Engineer's Observation Reports
- d. Grading / Shoring Requirements Based on Soils Reports
- e. Grading Inspection by Soils Engineer
- f. Sound Consultant (Multifamily)
- g. Fine Art Ornamentation (Commercial)
- h. In-lieu Parking
- i. Bonds

**III. Permits and Plan Review Required**
- a. Demolition
- b. Grading
- c. Shoring
- d. Building
- e. Plumbing
- f. Electrical
- g. Mechanical
- h. After Hours
- i. Fire Alarm
- j. Fire Sprinkler
- k. Landscape and Irrigation
- l. Temporary Certificate of Occupancy
- m. Certificate of Occupancy
- n. Class "A" Street Use
- o. Class "B" Delivery

**IV. Inspections**
- a. How to schedule inspection
- b. Different permit numbers for different permits
- c. Permits Expire
- d. What Inspections Are Necessary
- e. When to Expect Your Inspector
- f. Alternate Work Fridays
- g. Afterhours Inspections
- h. City Business Tax
- i. Worker's Compensation
- j. Re-inspection Fees
- k. Stop Work Orders
- l. Utility Releases
- m. Temporary C of O's/ C of C's/ Final Inspections
- n. Bond Refunds
- o. Electronic Construction Field Reports and Documents – www.beverlyhills.org/fieldreports

| | Name | Signature |
|---|---|---|
| Owner: | | |
| Contractor: | | |
| Engineer: | | |
| Architect: | | |

Meeting Date: __________ Permit Number: BS__________

**CITY USE ONLY**

Plan Reviewer: __________ Inspector: __________

Planner: __________

## INSPECTION RECORD

**CITY OF BEVERLY HILLS**
**Department of Community Development**
**Building and Safety**
**INSPECTION RECORD**

**IMPORTANT NOTICE!!!**
**PRESERVE THIS RECORD OF YOUR BUILDING INSPECTIONS**

**WORKING HOURS ARE FROM 8:00 AM TO 6:00 PM MONDAY THRU FRIDAY.**
**AFTER-HOUR PERMITS ARE REQUIRED TO WORK ON SATURDAYS, SUNDAYS, HOLIDAYS & DAILY FROM 6:00 PM TO 8:00 AM**

This card must be posted in a conspicuous place at or near the main entrance to the new building, addition or alteration during foundation and framing construction. The card must always be available to the building inspector. The issuance of a building permit does not authorize the installation of mechanical work such as plumbing, electrical, heating or refrigeration which requires a separate plumbing, electrical or mechanical permit. Building permits shall expire 180 days from the date of issuance if the work permitted thereunder has not commenced.

**FOR INSPECTION LOG ONTO http://apps.beverlyhills.org/obc OR CALL 310.285.2534. INSPECTION REQUEST ARE ACCEPTED BETWEEN THE HOURS OF 9:00 AM TO 3:00 PM FOR THE FOLLOWING BUSINESS DAY ONLY. SCHEDULING INSPECTIONS FOR MORE THAN ONE BUSINESS DAY IN ADVANCE ARE NOT ACCEPTED.**

***A fee is charged for a duplicate inspection card***

PERMIT NO.__________

DATE ISSUED__________

__________
ADDRESS OF JOB

__________
NATURE OF WORK

__________
OWNER

__________
CONTRACTOR

| CODE # | INSPECTION | DATE | INSPECTOR | CODE # | INSPECTION | DATE | INSPECTOR |
|---|---|---|---|---|---|---|---|
| 104 | Front, side & rear setbacks | | | | Progress Inspection | | |
| 114 | Structure Height | | | | Progress Inspection | | |
| 185 | Wall Heights | | | | Progress Inspection | | |
| 185 | Fence Heights | | | | Progress Inspection | | |
| 175 | Front Yard Paving | | | | Progress Inspection | | |
| 195 | Parking Spaces | | | | Progress Inspection | | |
| 195 | Handicapped Spaces | | | | Progress Inspection | | |
| CODE # | INSPECTION | DATE | INSPECTOR | CODE # | INSPECTION | DATE | INSPECTOR |
| FIRE DEPARTMENT | | | | GENERAL BUILDING | | | |
| | Sprinkler Rough | | | 311 | Sewer Verification By Plumbing Inspector | | |
| | Sprinkler Bracing | | | 106 | Footing Excavation | | |
| | Sprinkler Final | | | 118 | Footing A.B. Reinforcing Holdown | | |
| | Alarm Rough | | | 106 | UFER Ground | | |
| | Alarm Final | | | 106 | OK to Pour Footings | | |
| | Fixed Sys. Rough | | | POUR CONCRETE AFTER THE ABOVE ARE SIGNED | | | |
| | Fixed Sys. Final | | | 401 | Mechanical Groundwork | | |
| | Fire/Life Safety | | | 203 | Electrical Groundwork | | |
| WORK OUTSIDE BUILDING | | | | 302 | Plumbing Groundwork | | |
| 311 | Sewer | | | 312 | Gas Piping Groundwork | | |
| 315 | Gas Test | | | 111 | Floor Joists | | |
| 310 | Plbg/Mech | | | 110 | OK to Pour or Lay Floor | | |
| 203 | Electrical Underground | | | POUR CONCRETE FLOOR SLAB OR LAY SUBFLOOR AFTER THE ABOVE ARE SIGNED | | | |

| CODE # | INSPECTION | DATE | INSPECTOR | CODE # | INSPECTION | DATE | INSPECTOR |
|---|---|---|---|---|---|---|---|
| RETAINING WALLS | | | | DO NOT CALL FOR FRAMING INSPECTION UNTIL ROUGH ELECTRICAL, PLUMBING, MECHANICAL, AND FIRE APPROVALS HAVE BEEN OBTAINED | | | |
| 106 | Evacuation and Reinforcing Steel | | | | | | |
| 106 | OK to Pour Footing | | | 206 | Walls (Elec.) | | |
| 107 | First Row of Block | | | 206 | Ceiling (Elec.) | | |
| 107 | OK to Grout | | | 308 | Rough Plumbing | | |
| 107 | Conc. Wall Reinforcing | | | 406 | Rough Mechanical | | |
| 108 | OK to Pour Conc. Wall | | | 118 | Holdowns | | |
| SWIMMING POOLS | | | | 119 | Shear Walls | | |
| 130 | Excavation | | | 113 | Floor Nailing | | |
| 130 | Reinforcing | | | 151 | Roof Nailing | | |
| 201 | Bonding | | | 121 | Rough Framing | | |
| 314 | Pool Piping | | | 122 | Insulation | | |
| 109 | OK TO GUNITE | | | 127 | T-Bar Ceiling | | |
| 308 | Rough Plumbing | | | 125 | Exterior Lath | | |
| 208 | Rough Electrical | | | 124 | Interior Lath | | |
| GRADING INSPECTIONS | | | | 123 | Drywall Nailing | | |
| 501 | Initial Grading | | | 126 | Scratch Coat | | |
| 502 | Toe or Bottom | | | FINAL INSPECTIONS | | | |
| PLACE FILL AFTER ABOVE IS SIGNED | | | | 214 | Final Electrical | | |
| 503 | Excavation | | | 315 | Final Gas | | |
| 505 | Fill | | | 317 | Final Plumbing | | |
| 504 | Drainage Devices | | | 410 | Final Mechanical | | |
| 505 | Rough Grading | | | | Final Fire | | |
| BUILDING ADDRESS __________ | | | | 410 | Final Noise Control | | |
| PERMIT NUMBER __________ | | | | 506 | Final Grading | | |
| | | | | 129 | Final This Permit | | |

INSPECTORS COMMENTS

RTK Architects, Inc.
Architecture • Planning • Interior
www.rtkarchitects.com
3975 Landmark St. Ste.#400 Culver City, CA 90232 310 / 837-3606

Revision

| No. | Date | By |
|---|---|---|
| | | |

BID SET

Job No. 1511800
Submittal
Issue Date 4/12/16
Drawn By
Checked By

NOTES & FORMS

CITY OF BEVERLY HILLS DOG PARK
344 FOOTHILL ROAD
BEVERLY HILLS, CA 90210

A-0.1

5/2/16

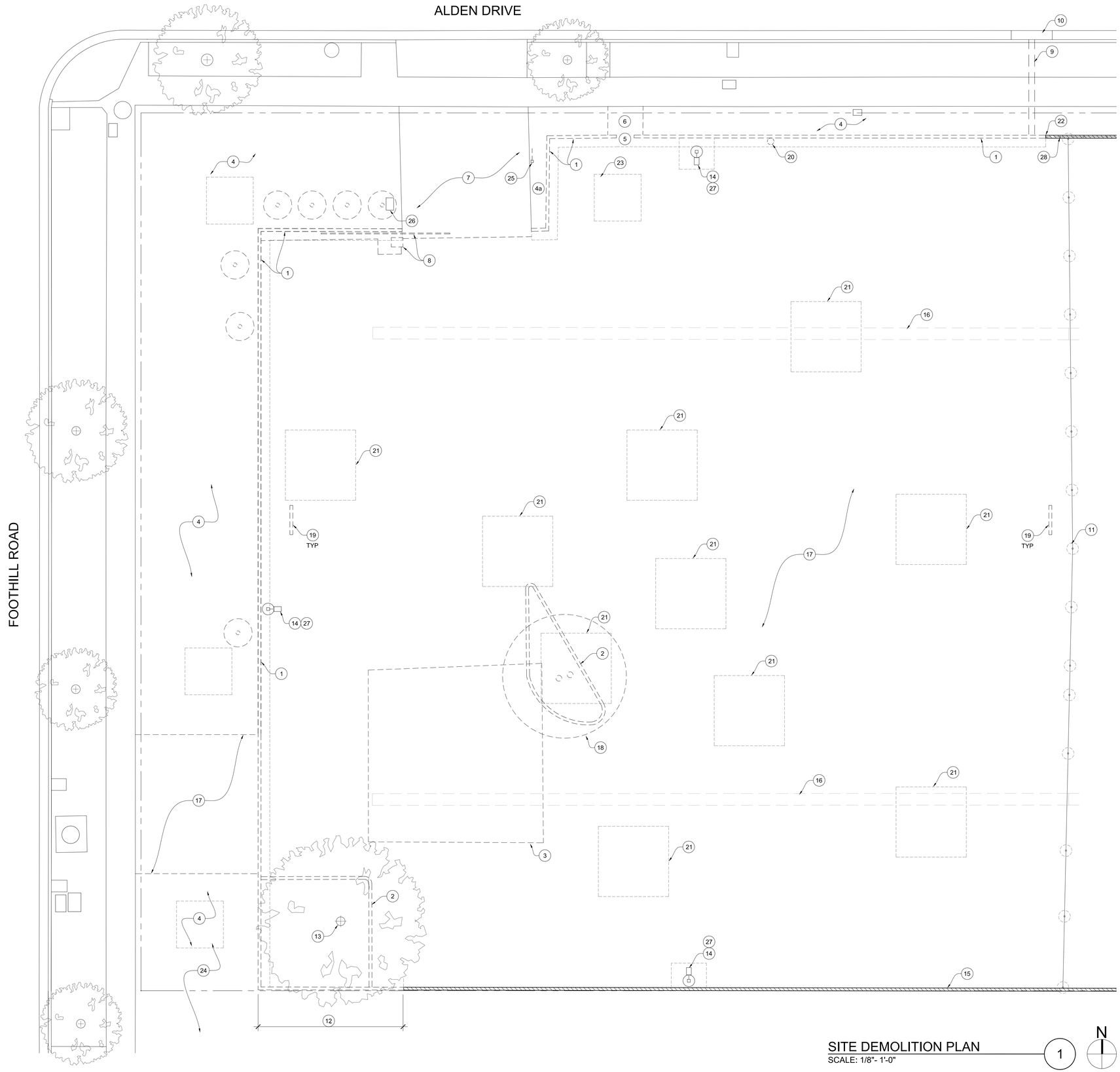


SITE DEMOLITION PLAN
SCALE: 1/8"- 1'-0"

1

N

## KEYNOTES:

1. (E) BLOCK WALL, FENCE & FOOTING TO BE REMOVED
2. (E) CONC. CURB TO BE REMOVED
3. REMOVE (E) CANOPY STRUCTURE, INCLUDING FOOTINGS
4. (E) GROUND COVER, DG PATH & TREES TO BE REMOVED. REFER TO PROPOSED SITE PLAN SHEET A-2.0 FOR NEW WORK.
5. REMOVE (E) WROUGHT IRON MAN GATE
6. REMOVE (E) CONCRETE WALKWAY
7. (E) CONCRETE DRIVEWAY TO REMAIN
8. REMOVE (E) VEHICULAR GATE & MOTOR INCLUDING ELECTRICAL CONDUITS, ETC.
9. REMOVE (E) CONCRETE WALK & LANDSCAPING WHERE NEW STORM DRAIN OCCURS
10. REMOVE (E) CURB & GUTTER AT NEW STORM DRAIN
11. (E) CHAIN LINK FENCE & FOOTING TO BE REMOVED
12. PARTIALLY REMOVE EXISTING CMU WALL, KEEP (E) FOOTING & STEM WALL TO A HEIGHT EQUAL TO FINISH GRADE ON THE SOUTH PROPERTY - DO NOT CUT (E) REBAR UP TO 3'-0" FROM REMOVAL LINE. EXPOSED REBARS WILL LAP NEW REBARS PER DETAIL #10/A-5.0
13. (E) TREES TO REMAIN
14. (E) LIGHT STANDARD TO REMAIN, PROTECT DURING EXCAVATION PHASE
15. (E) CMU WALL & FOOTING TO REMAIN. REMOVE (E) CMU CAP
16. REMOVE (E) CONCRETE SWALE
17. REMOVE (E) AC PAVING & 9 INCHES OF ARSENIC CONTAMINATED SOIL (FOR A TOTAL OF 12" REMOVAL)
18. (E) TREES TO BE REMOVED
19. REMOVE (E) CONC. WHEEL STOPS, TYPICAL (TOTAL OF 17 - VERIFY)
20. REMOVE & PROTECT (E) TIME CLOCK TO BE REINSTALLED AT NEW WALL
21. 60"Ø BOX TREE WELL - 12' x 12' x 4'-6"D
22. CUT (E) CMU WALL AT LINE 8" BACK FROM THE INDICATED FINISH END.
23. 48"Ø BOX TREE WELL - 8' x 8' x 4'-0"D
24. FOR NEW UTILITY LINES REFER TO SHEET C-4.01
25. EXISTING GATE KEY ACCESS TO BE REMOVED
26. EXISTING IRRIGATION CONTROL BOX TO BE REMOVED. PRIOR TO REMOVAL, VERIFY IRRIGATION LINES CONTROLLED BY THIS CONTROLLER. IF SERVING BEYOND THIS SITE, DO NOT REMOVE THE CONTROLLER.
27. **REMOVE EXISTING LIGHT FIXTURE AT TOP OF (E) LIGHT POLES, TYPICAL FOR (3)**
28. **CUT (E) WROUGHT IRON FENCE AT A POST LINE & MODIFY TO FIT NEW WALL LOCATION. ADD NEW POST AS REQUIRED - ALSO SEE #1/A-4.0**

## GENERAL NOTES:

A. AT ALL EXCAVATION AREAS, ARSENIC IMPACTED SOIL SHALL BE REMOVED & DISPOSED PER REGULATORY AGENCIES GUIDELINES.

B. CONTAMINATED SOIL SHALL BE REMEDIATED AT ALL NEW UTILITY LINES, NEW TRENCHES, NEW FOOTINGS & OTHER AREAS AS INDICATED ON CIVIL DRAWINGS SHEET #C-1.01

C. FOR EXTENT OF NEW FOOTINGS REFER TO SHEET A-1.1 & WALL DETAILS ON SHEET A-5.0 (FOR REFERENCE ONLY)

**D. ITEMS 1 THRU 26 ARE NOT INCLUDED IN CONTRACT AND WILL BE PERFORMED BY OTHERS PRIOR TO START OF THIS CONTRACT**

**'FOR REFERENCE ONLY'**

RTK
RTK Architects, Inc.
Architecture ▪ Planning ▪ Interior
www.rtkarchitects.com
3975 Landmark St. Ste.#400 Culver City, CA 90232 310 / 837-3806

| No. | Date | By | Revision |
|---|---|---|---|
| | | | |

BID SET

| | |
|---|---|
| Job No. | 1511800 |
| Submittal | |
| Issue Date | 4/12/16 |
| Drawn By | |
| Checked By | |

SITE DEMOLITION PLAN

CITY OF BEVERLY HILLS DOG PARK

344 FOOTHILL ROAD
BEVERLY HILLS, CA 90210

A-1.0

5/2/16

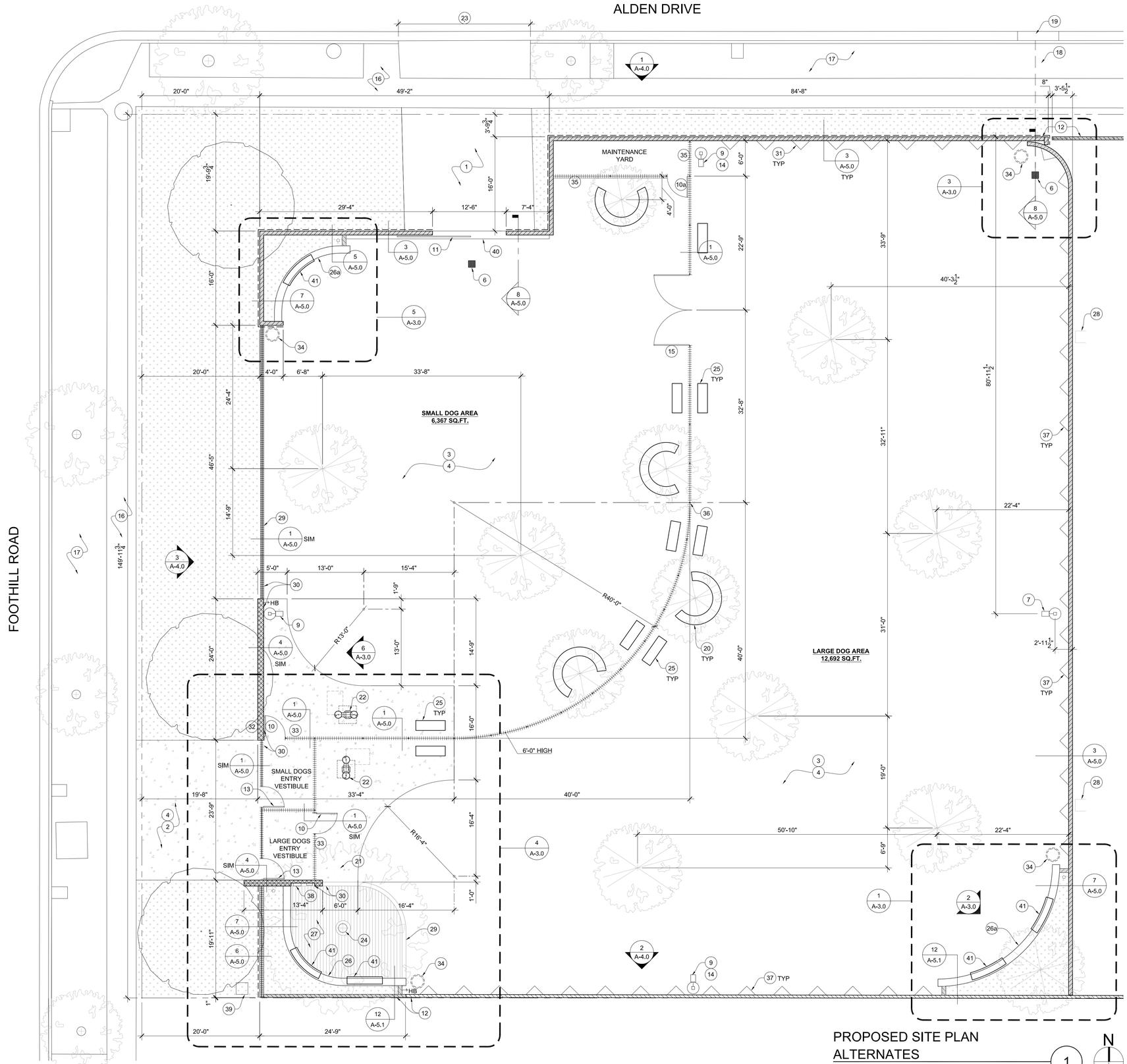


PROPOSED SITE PLAN
ALTERNATES
SCALE: 1/8"- 1'-0"

1

## KEYNOTES:

1. (E) CONCRETE DRIVEWAY TO REMAIN
2. NEW DG PAVING - REFER TO LANDSCAPING DWGS.
3. NEW DG PATH OVER BASE & OVER IMPERVIOUS LINER OVER CERTIFIED SOIL. SEE CIVIL DWGS.
4. DG PAVING, 2% MAXIMUM SLOPE IN ANY DIRECTION
5. NEW UMBRELLA FOOTING - SEE DETAIL #11/A-5.1
6. NEW CATCH BASIN - SEE DETAIL #2/C-2.02
7. LIGHT STANDARD
8. NOT USED
9. (E) LIGHT STANDARD - REFINISH POLE TO MATCH (E) & PROVIDE (N) LAMP
10. NEW 3'-6" WIDE MAN GATE

10a. NEW 3'-6" WIDE MAN GATE - SEE DETAIL #7/A-5.2

11. NEW MANUAL OPERATED SLIDING TYPE SERVICE GATE. SEE DETAIL #2/A-5.2
12. ALIGN NEW & EXISTING WALL
13. NEW 3'-6" WIDE MAN GATE WITH FUTURE CARD KEY ACCESS.
14. FUTURE CCTV TO BE INSTALLED AT (E) LIGHT POLE
15. MAINTENANCE GATE - SEE DETAIL #4/A-5.2
16. (E) SIDE WALK
17. (E) PARKWAY
18. PATCH (E) SIDEWALK & PARKWAY AT NEW STORM DRAIN - PER CITY OF BEVERLY HILLS STANDARDS
19. NEW CURB & GUTTER AT NEW STORM DRAIN PER CITY BEVERLY HILLS STANDARDS DETAIL
20. CIRCULAR BENCH BY CANTERBURY **(ALLOWANCE #1)**
21. NOT USED
22. DRINKING FOUNTAIN - SEE DETAIL #10/A-5.1
23. EXISTING CURB CUT & APRON TO REMAIN
24. EXISTING MATURE TREE
25. CITY STANDARD BENCH, O.F.C.I - SEE DETAIL #9/A-5.2
26. RAISED PLANTER WALL - SEE #4/A3.0 & DETAIL #7/A-5.0 (SIM) & #12/A-5.0

26a. RAISED PLANTER WALL - SEE #1&5/A-3.0 & DETAIL #5/A-5.0 **(ALTERNATE COST #1)**

27. TREX DECKING MATERIAL
28. (E) CONCRETE SWALE
29. FLUSH CONCRETE CURB - SEE DETAIL #6/C2.01
30. ALIGN WALL AND CURB
31. VINE POCKET, TYP. - SEE LANDSCAPING DWGS. **(ALTERNATE COST #4)**
32. PARK SIGNAGE BACK LIT
33. SIGNAGE
34. DOGGIE BAG & TRASH RECEPTACLE, O.F.O.I
35. FENCE WITH PERFORATED PANEL - SEE DETAIL #5/A-5.2 SIM.
36. ELECTRICAL J-BOX STUB-OUT FOR FUTURE USE SEE SHEET #E-1.0
37. VINE POCKETS, TYP. SEE LANDSCAPE PLAN SHEET #L2.0
38. ELECTRICAL PANEL & DATA PANEL. REFER TO SHEET #E-1.0
39. DATA CONTROL BOX
40. 8" THICK CONC BAND AT SLIDING GATE TRACK
41. CURVED METAL BENCH OVER CONC. PLANTER WALL **(ALLOWANCE #2)** - BY CANTERBURY

## LEGEND:

- ECO MESH FENCE BY: MCNICHOLS
  - 10 GAUGE PRE GALVANIZED
  - 3" FRAME DEPTH WITH 2" SQ. OPENING WIRE MESH
  - COLOR: POWDER COATED BLACK
- NEW FENCE BY: MCNICHOLS (PART #3293920148)
  - GALVANIZED 2" SQ. OPENING WIRE MESH
  - COLOR: POWDER COATED TO MATCH ECO MESH
- NEW FENCE BY: MCNICHOLS (PART #1695121841)
  - 18 GAUGE GALVANIZED
  - SQUARE PERFORATED PANEL
  - COLOR: PAINTED TO MATCH ECO MESH
- NEW FENCE BY: MCNICHOLS (PART #3693160041)
  - GALVANIZED WIRE MESH
  - COLOR: PAINTED TO MATCH ECO MESH
- NEW CMU WALL (FOR EXPOSURE JOINTS SEE 81C2.01)
- (N) CMU WALL - PRECISION BLOCK
  **- BASE COST: STANDARD FINISH**
  **- ALTERNATE COST #2: BEAD BAST FINISH BOTH SIDES**
- ARCHITECTURAL CMU WALL - 12" ULTRA BURNISHED FINISH AT ALL EXPOSED SURFACES - SEE DETAIL #4/A-5.0
- NEW TREE - ALTERNATE COST
- EXISTING TREE
- NEW LANDSCAPING AREA
- TOP-CAST PIGMENTED CONCRETE PAVING WITH SAND-WASH FINISH - MAX. 2% SLOPE IN ANY DIRECTION COLOR: STANDARD COLOR BY DAVIS COLORS. PROVIDE 3'X3' MOCK UP FOR APPROVAL - REFER TO DETAIL #6/C2.02
- HB — HOSE BIB

## GENERAL NOTES:

A. REFER TO CIVIL DRAWINGS - SHEET #C-3.01 FOR DRAINAGE PLAN & NEW EARTHWORK QUANTITIES.

B. REFER TO SHEET #L-2.0 FOR LOCATION OF VINE POCKETS. INDICATED VINE POCKETS ON NORTH WALL SHALL BE AN ALTERNATE COST

RTK
RTK Architects, Inc.
Architecture ▪ Planning ▪ Interior
www.rtkarchitects.com
3975 Landmark St. Ste.#400 Culver City, CA 90232 310 / 837-3806

| No. | Date | By | Revision |
|---|---|---|---|
| | | | |

| | |
|---|---|
| BID SET | |
| Job No. | 1511800 |
| Submittal | |
| Issue Date | 4/12/16 |
| Drawn By | |
| Checked By | |

PROPOSED SITE PLAN
CITY OF BEVERLY HILLS DOG PARK
344 FOOTHILL ROAD
BEVERLY HILLS, CA 90210

A-2.0

5/2/16

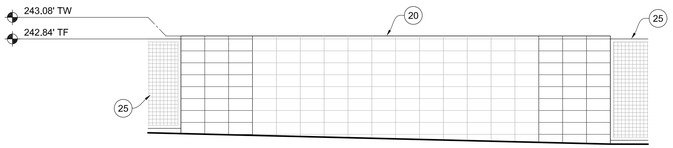


DONOR WALL
PARTIAL ELEVATION (6)
SCALE: 1/4"- 1'-0"

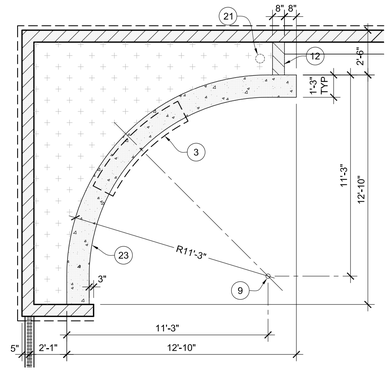


NORTH WEST PLANTER
ENLARGED PLAN (ALTERNATE#1) (5)
SCALE: 1/4"- 1'-0"

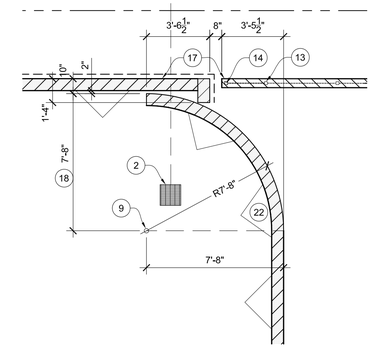


NORTH EAST PLANTER
ENLARGED PLAN (3)
SCALE: 1/4"- 1'-0"

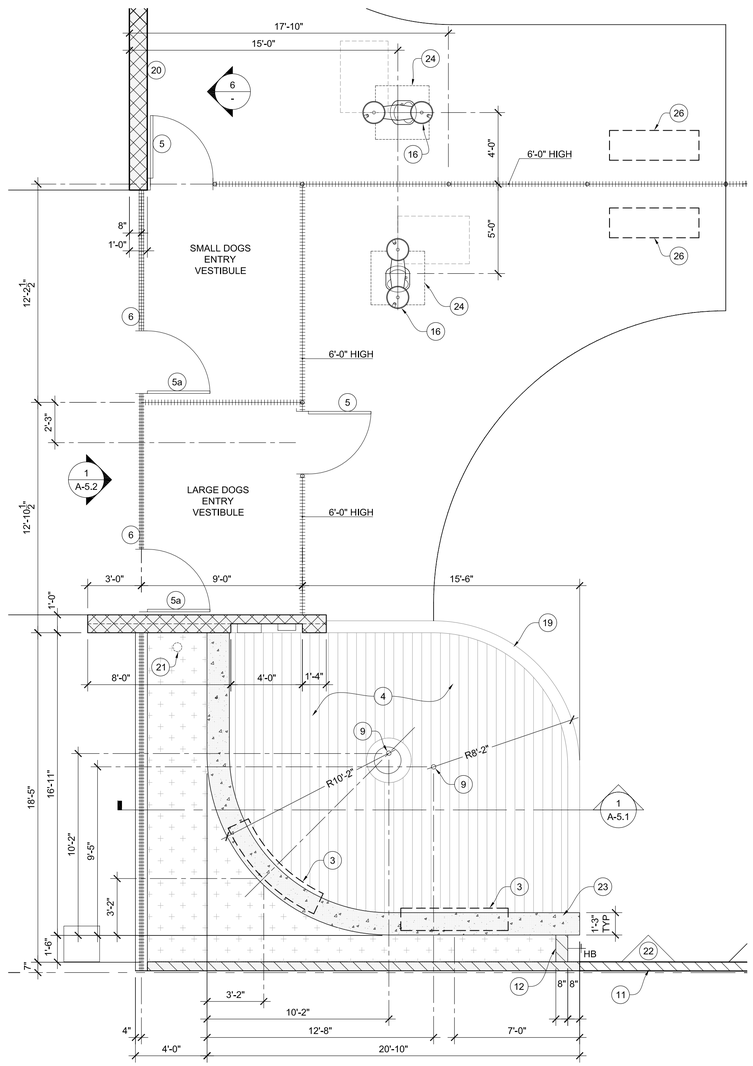


SOUTH WEST PLANTER & DECK
ENLARGED PLAN (4)
SCALE: 1/4"- 1'-0"

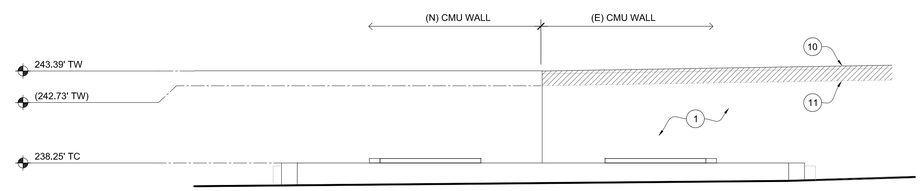


PLANTER PARTIAL ELEVATION (2)
SCALE: 1/4"- 1'-0"

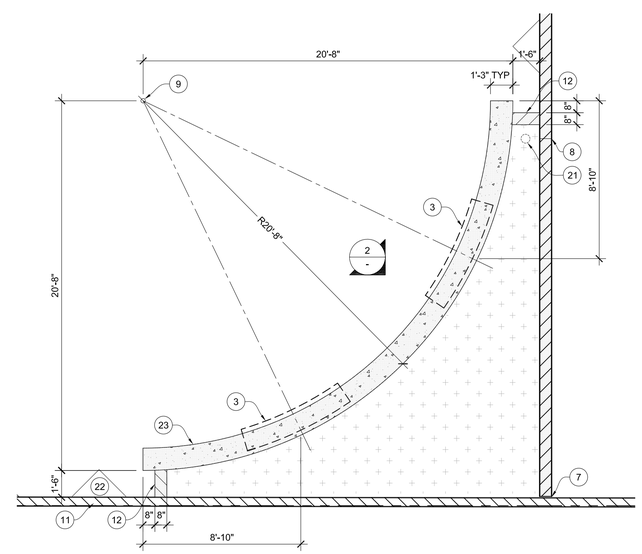


SOUTH EAST PLANTER
ENLARGED PLAN (ALTERNATE#1) (1)
SCALE: 1/4"- 1'-0"

## KEYNOTES:

1. PATCH (E) WALL PLASTER AS REQUIRED, TEXTURE & COLOR TO MATCH EXISTING
2. CATCH BASIN - REFER TO CIVIL DRAWINGS FOR SIZE & DETAIL.
3. STEEL BENCH, POWDER COAT FINISH, ANCHOR TO CONCRETE SURFACE - SEE DETAIL #12/A-5.0
4. DECK FRAMING - SEE DETAIL #2/A-5.1
5. NEW 3'-6" WIDE MAN GATE - SEE DETAIL #8/A-5.2

5a. NEW 3'-6" MAN GATE WITH FUTURE CARD KEY ACCESS - SEE DETAIL #5/A-5.2

6. FUTURE CARD KEY ACCESS
7. EXPANSION JOINT - SEAL AT PLANTER
8. PROVIDE EXPANSION JOINT AT 20'-0" O.C.
9. CENTER OF RADIUS
10. NEW CMU CAP
11. NEW (E) CMU TOP ROW
12. NEW CMU PARTIAL WALL WITH CMU CAP
13. (E) WROUGHT IRON FENCE CUT AT A POST LINE & MODIFY TO FIT NEW WALL LOCATION.
14. MODIFIED WROUGHT IRON FENCE TO BE REINSTALLED WITH NEW POST AS REQUIRED. ALL EXPOSED SURFACES TO MATCH EXISTING.
15. DOGGIE BAG DISPENSER - SEE DETAIL #12/A-5.1
16. DRINKING FOUNTAIN - SEE DETAIL #10/A-5.1
17. EXISTING AND NEW WALL TO ALIGN
18. 8" X 8" X 8" CMU BLOCK AT CURVED WALL
19. CONCRETE CURB FLUSH WITH FINISH GRADE
20. DONOR WALL - ARCHITECTURAL CMU WALL ULTRA BURNISHED FINISH
21. PLANTER DRAIN - SEE CIVIL DRAWING - DETAIL #5/C-2.02
22. VINE POCKETS, TYPICAL. SEE LANDSCAPE PLAN SHEET #L-2.0
23. CONCRETE PLANTER WALL - USE ARCHITECTURAL CONCRETE FORM LINER. SACK AS REQUIRED & SEAL (PROVIDE A MOCK-UP).
24. 36"X36' CONCRETE PAD - SEE DETAIL #10/A-5.1
25. NEW FENCE - SEE PLAN & LEGEND FOR TYPE
26. CITY STANDARD BENCH, O.F.C.I - SEE DETAIL #9/A-5.2

## LEGEND:

- ECO MESH FENCE BY: McNICHOLS
  - 10 GAUGE PRE GALVANIZED
  - 3" FRAME DEPTH WITH 2" SQ. OPENING WIRE MESH
  - COLOR: POWDER COATED MEDIUM BRONZE
- NEW FENCE BY: MCNICHOLS (PART #3293920148)
  - GALVANIZED 2" SQ. OPENING WIRE MESH
  - COLOR: POWDER COATED TO MATCH ECO MESH
- NEW FENCE BY: McNICHOLS (PART #1695121841)
  - 18 GAUGE GALVANIZED
  - SQUARE PERFORATED PANEL
  - COLOR: PAINTED TO MATCH ECO MESH
- NEW FENCE BY: MCNICHOLS (PART #3693160041)
  - GALVANIZED WIRE MESH
  - COLOR: PAINTED TO MATCH ECO MESH
- NEW CONCRETE WALL
- NEW CMU WALL
- (N) CMU WALL - PRECISION BLOCK BASE COST: STANDARD FINISH (ALTERNATE COST #2: BEAD BAST FINISH BOTH SIDES)
- ARCHITECTURAL CMU WALL 12" ULTRA BURNISHED AT ALL EXPOSED SURFACES)
- NEW LANDSCAPING AREA
- DECKING WITH CONCEALED FASTENERS BY TREX TYPE: TRANSCEND COLOR: ROPE SWING (SUBMIT SAMPLE FOR APPROVAL)
- HB — HOSE BIB

## GENERAL NOTES:

A. REFER TO CIVIL DRAWINGS - SHEET #C-3.01 FOR DRAINAGE PLAN & NEW EARTHWORK QUANTITIES.

B. HAZARDOUS SOIL SHALL BE REMEDIATED AT ALL UTILITY LINE, NEW TRENCHES, NEW FOOTINGS & OTHER AREAS AS INDICATED ON CIVIL DRAWINGS.

C. ALL DIMENSIONS ARE TO BE FACE OF MASONRY UNLESS NOTED OTHERWISE

RTK Architects, Inc.
Architecture ▪ Planning ▪ Interior
www.rtkarchitects.com
3975 Landmark St. Ste.#400 Culver City, CA 90232 310 / 837-3606

| No. | Date | By | Revision |
|---|---|---|---|
| | | | |

| | |
|---|---|
| Job No. | 1511800 |
| Submittal | BID SET |
| Issue Date | 4/12/16 |
| Drawn By | |
| Checked By | |

PROPOSED SITE PLAN

CITY OF BEVERLY HILLS DOG PARK
344 FOOTHILL ROAD
BEVERLY HILLS, CA 90210

A-3.0

5/2/16

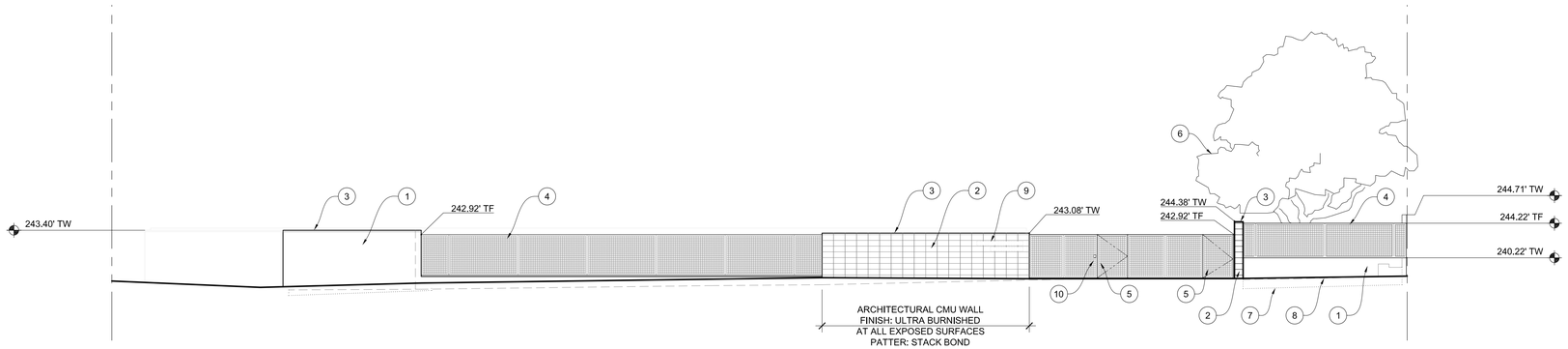


## WEST ELEVATION 3

SCALE: 1/8"- 1'-0"

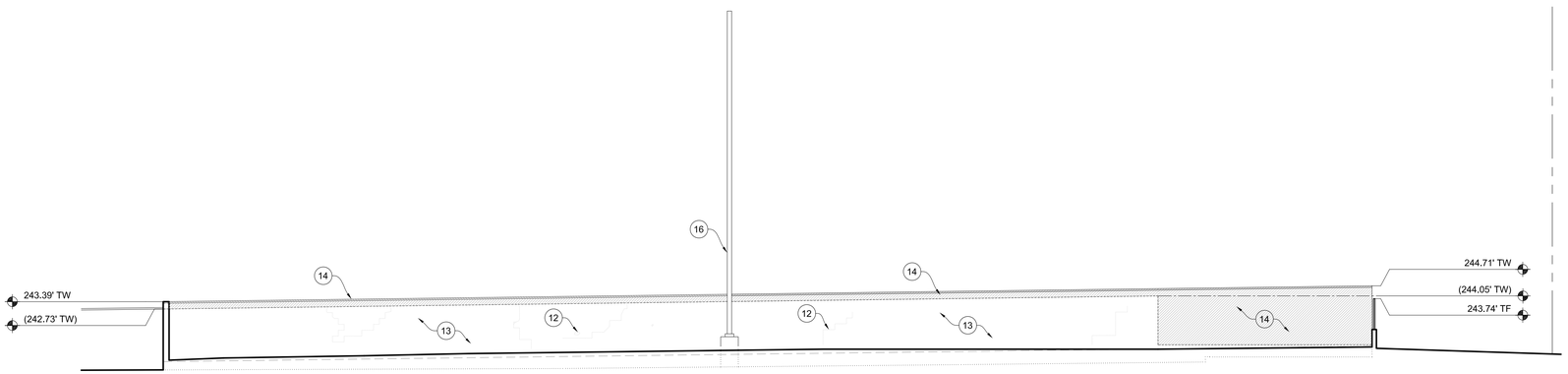


## NORTH INTERIOR ELEVATION 2

SCALE: 1/8"- 1'-0"

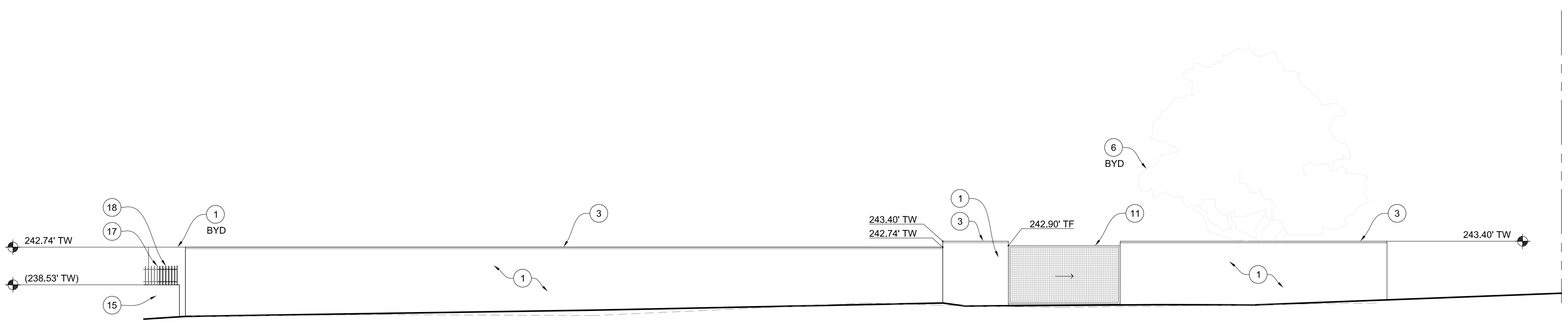


## NORTH ELEVATION 1

SCALE: 1/8"- 1'-0"

## KEY NOTES:

1. STANDARD CMU BLOCK WALL
   BASE BID: PRECISION BLOCK BY: ORCO

   **ALTERNATE COST #2:**
   SHOT BLAST FINISH (BOTH SIDES & CAP) BY: ORCO
2. ULTRA BURNISHED ARCHITECTURAL CMU WALL
   STACK BOND PATTERN
   COLOR: GROUP C
   BY: HEADWATERS
   LOCAL DISTRIBUTOR: ORCO BLOCK
3. CMU CAP TO MATCH WALL
4. ECO MESH FENCE POWDER COATED
   BY: McNICHOLS
   COLOR: BLACK
5. MAN GATE WITH FUTURE CARD READER - SEE DETAIL 1/A-5.2
6. (E) MATURE TREE
7. (E) GRADE AT TREE
8. LINE OF PLANTER BEHIND FENCE
9. BACK LIT SIGNAGE, O.F.O.I.
10. CARD READER
11. GATE - SEE DETAIL #2/A-5.2
12. TYPICAL CRACK AT (E) WALL
13. (E) 6" CMU WALL, FILL ALL (E) CELLS AT (E) REBARS. NEW REBARS SHALL BE LAPPED WITH EXISTING PRIOR TO GROUTING. REPAIR ALL CRACKED SURFACES & JOINTS. PROVIDE NEW COMPLETE FACE SHELL WHERE (E) FACE SHELL IS CRACKED OR MISSING. PATCH PLASTER FINISH AT ALL REPAIRED SURFACES. PAINT ENTIRE WALL. ALSO SEE DETAIL #10/A-5.0
14. NEW 6" CMU WALL - PLASTER TO MATCH (E)
15. (E) 6" CMU WALL
16. (E) LIGHT STANDARD
17. (E) WROUGHT IRON FENCE CUT AT A POST LINE & MODIFY TO FIT NEW WALL LOCATION.
18. MODIFIED WROUGHT IRON FENCE TO BE REINSTALLED WITH NEW POST AS REQUIRED. ALL EXPOSED SURFACES TO MATCH EXISTING.

## LEGEND:

| | |
|---|---|
| | FINISH GRADE BEHIND WALL |
| | NEW FINISH GRADE |
| | (E) FINISH GRADE |
| (00.0) | (E) FINISH ELEVATION |
| 00.0 | (N) FINISH ELEVATION |

## GENERAL NOTES:

A.

RTK
RTK Architects, Inc.
Architecture ▪ Planning ▪ Interior
www.rtkarchitects.com
3975 Landmark St. Ste.#400 Culver City, CA 90232 310 / 837-3806

| No. | Date | By | Revision |
|---|---|---|---|

BID SET

| | |
|---|---|
| Job No. | 1511800 |
| Submittal | |
| Issue Date | 4/12/16 |
| Drawn By | |
| Checked By | |

PROPOSED ELEVATIONS

CITY OF BEVERLY HILLS DOG PARK

344 FOOTHILL ROAD
BEVERLY HILLS, CA 90210

A-4.0

5/2/16

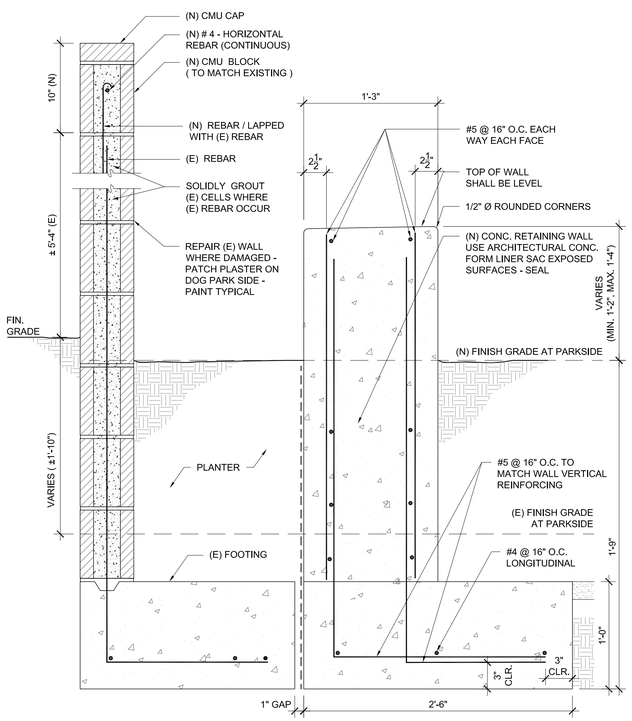


## PLANTER WALL AT (E) WALL
SCALE: 1-1/2" = 1'-0"
12

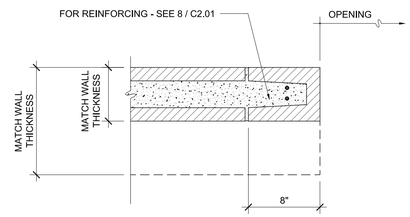


## WALL JAMB DETAIL
SCALE: 1-1/2" = 1'-0"
9

| MATERIAL STRENGTH PROPERTIES - SCHEDULE | | | | | | | | |
|---|---|---|---|---|---|---|---|---|
| ITEM | CONCRETE | | REBAR GRADE | | CONST. INSP. | MAX SLUMP @ APPLICATION POINT (2) | MAX W/C RATIO | MAX AGGREGATE SIZE |
| | EXPS. | STRENGTH (PSI) | A-615 GR.60 (1) | A-185 MESH | YES | | | |
| FOOTINGS | ROCK | 300 | X | | X | 4" | 0.50 | 1-1/2" |

NOTES:
(1) 28 DAYS
(2) SUBJECT TO USE OF WATER REDUCING ADMIXTURES, MIX DESIGNS SHALL BE BY AN APPROVED LABORATORY AND SHALL BE SUBMITTED FOR APPROVAL TO THE STRUCTURAL ENGINEER.
(3) USED FOR ALL REINFORCING BARS REQUIRING WELDING.

1. ALL REINFORCING STEEL DOWELS, ANCHOR BOLTS, AND OTHER INSERTS SHALL BE SECURED IN POSITION PRIOR TO POURING CONCRETE.
2. ALL CONCRETE SHALL BE ROCK CONCRETE CONFORMING TO A.S.T. C-33 EXCEPT SAND LIGHT WEIGHT CONCRETE SHALL CONFORM TO A.S.T.M. C-330. MAXIMUM SIZE AGGREGATE SHALL BE AS INDICATED ABOVE.
3. RETAIN AN APPROVED TESTING LABORATORY. ACCEPTABLE TO THE OWNER, TO PREPARE CONCRETE MIX DESIGNS ACCORDING TO GOVERNING CODE.
   a. SUBMIT TO THE ARCHITECT TWO RECORD COPIES OF EACH MIX DESIGN SIGNED BY A CALIFORNIA REGISTERED CIVIL ENGINEER.
   b. NEW MIX DESIGNS ARE REQUIRED WHEN THERE IS A CHANGE IN MATERIAL BEING USED.
   c. MIX DESIGN SHALL CLEARLY STATE THE LOCATION/AREAS FOR USE.

## CONC. MATERIAL PROPERTY
SCALE: N.T.S.
8

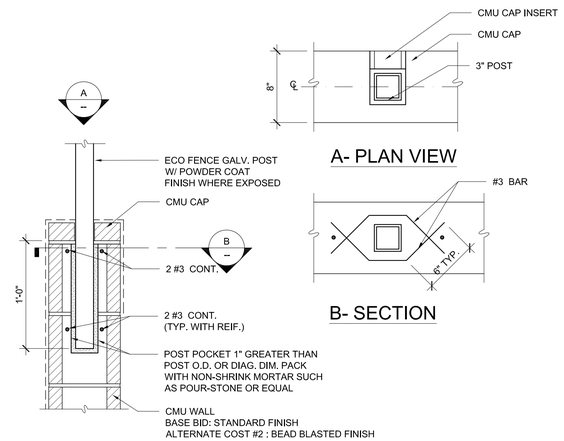


## POST POCKET DETAIL
SCALE: 1-1/2" = 1'-0"
6

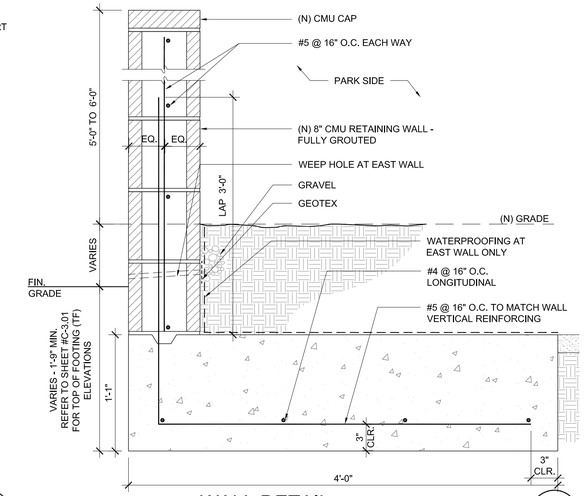


## WALL DETAIL
SCALE: 1-1/2"= 1'-0"
3

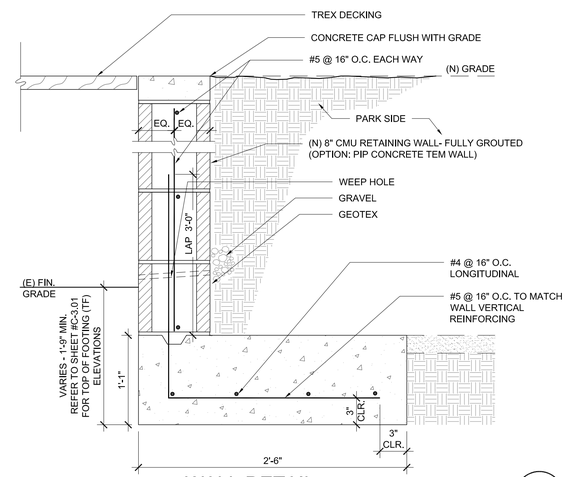


## WALL DETAIL
SCALE: 1-1/2"= 1'-0"
2

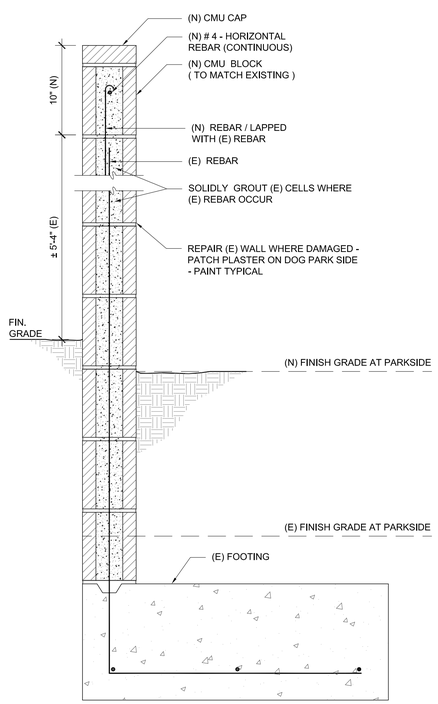


## WALL DETAIL
SCALE: 1-1/2"= 1'-0"
10

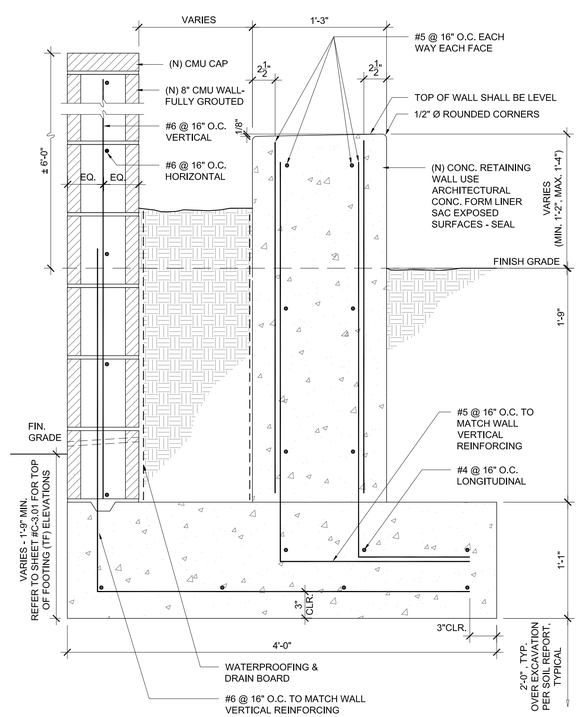


## WALL DETAIL
SCALE: 1-1/2"= 1'-0"
7

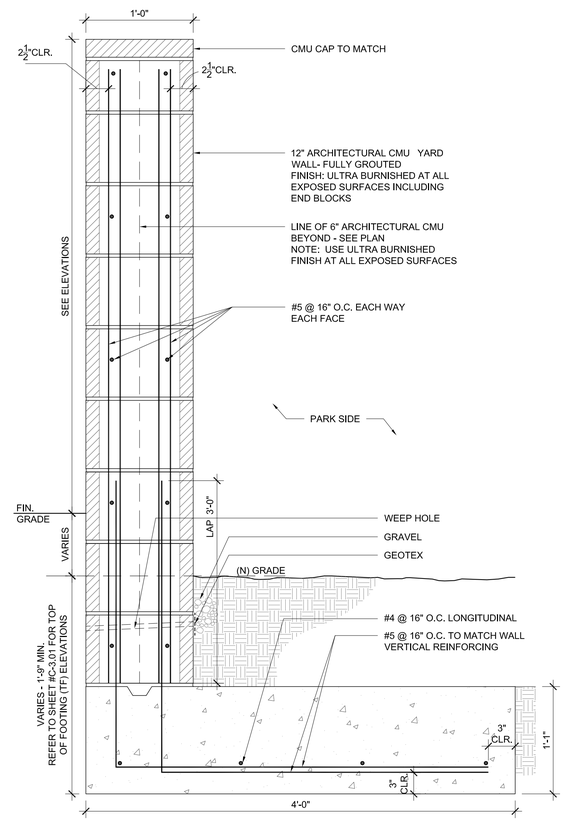


## ARCHITECTURAL CMU WALL DETAIL
SCALE: 1-1/2"= 1'-0"
4

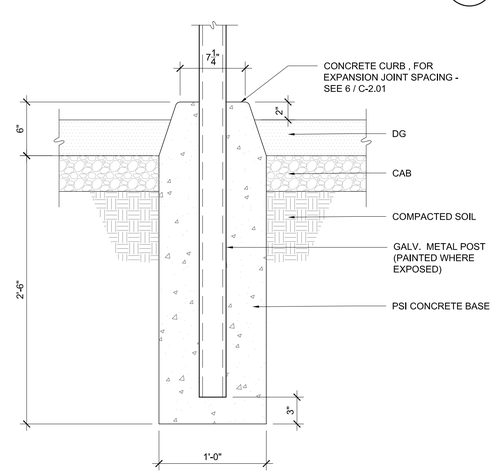


## POLE FOOTING
SCALE: 1-1/2"= 1'-0"
1


RTK Architects, Inc.
Architecture ▪ Planning ▪ Interior
www.rtkarchitects.com
3975 Landmark St. Ste.#400 Culver City, CA 90232 310 / 837-3806


| No. | Date | By | Revision |
|---|---|---|---|

| | |
|---|---|
| BID SET | |
| Job No. | 1511900 |
| Submittal | |
| Issue Date | 4/12/16 |
| Drawn By | |
| Checked By | |

DETAILS

CITY OF BEVERLY HILLS DOG PARK
344 FOOTHILL ROAD
BEVERLY HILLS, CA 90210

A-5.0
5/2/16

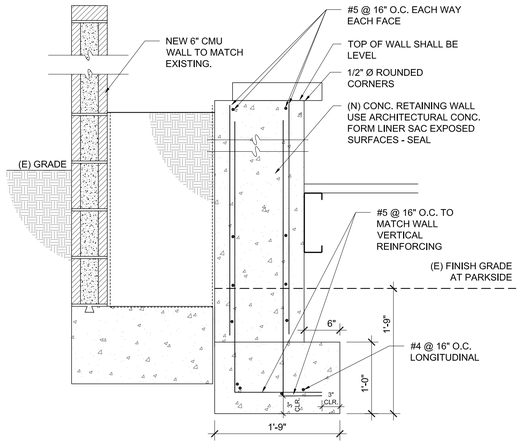


## PLANTER FOOTING DETAIL (12)
SCALE: 1" = 1'-0"

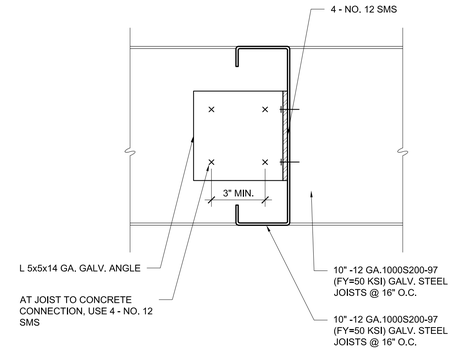


## CONNECTION AT JOISTS (6)
SCALE: 3"= 1'-0"

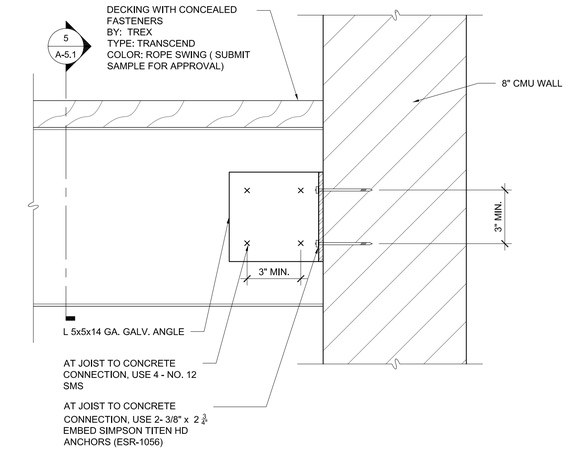


## CONNECTION AT WALL (3)
SCALE: 3"= 1'-0"

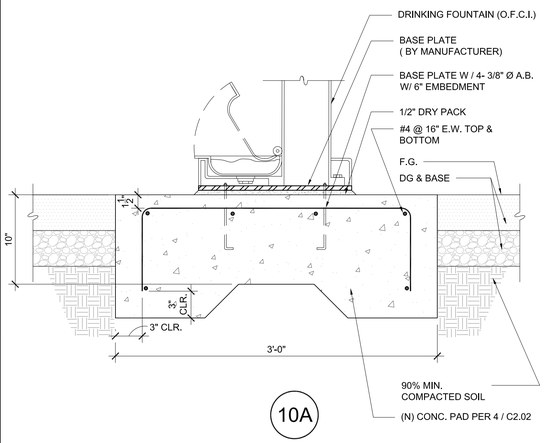


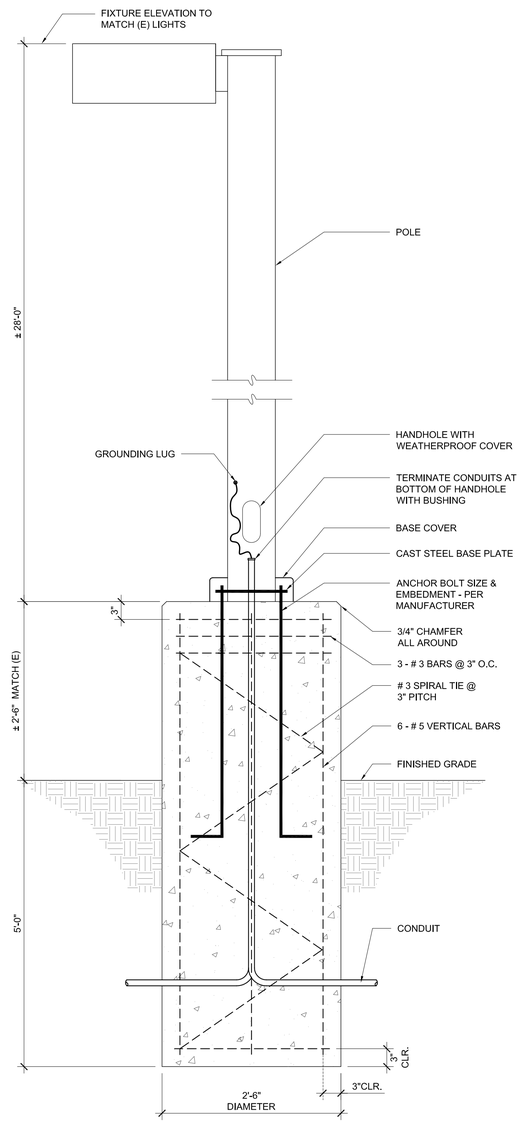


## LIGHT POLE DETAIL (7)
SCALE: 1"= 1'-0" (ALTERNATE COST)

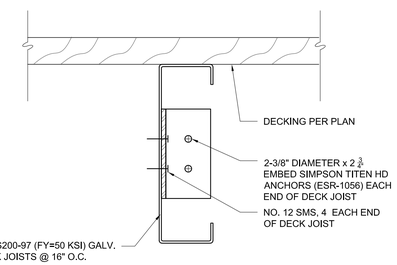


## DETAIL (5)
SCALE: 3"= 1'-0"

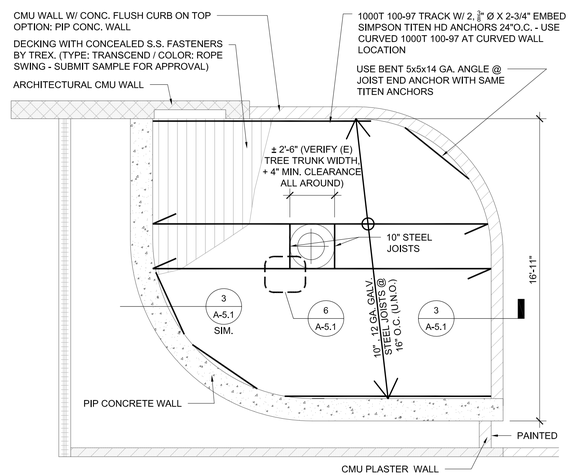


## DECK FRAMING PLAN (2)
SCALE: 1/4"= 1'-0"

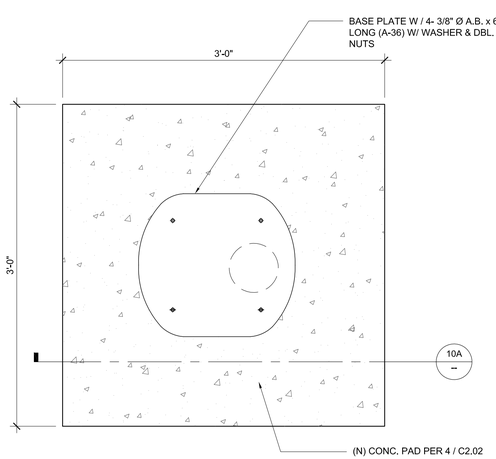


## DRINKING FOUNTAIN FOOTING (10)
SCALE: 1-1/2"= 1'-0"

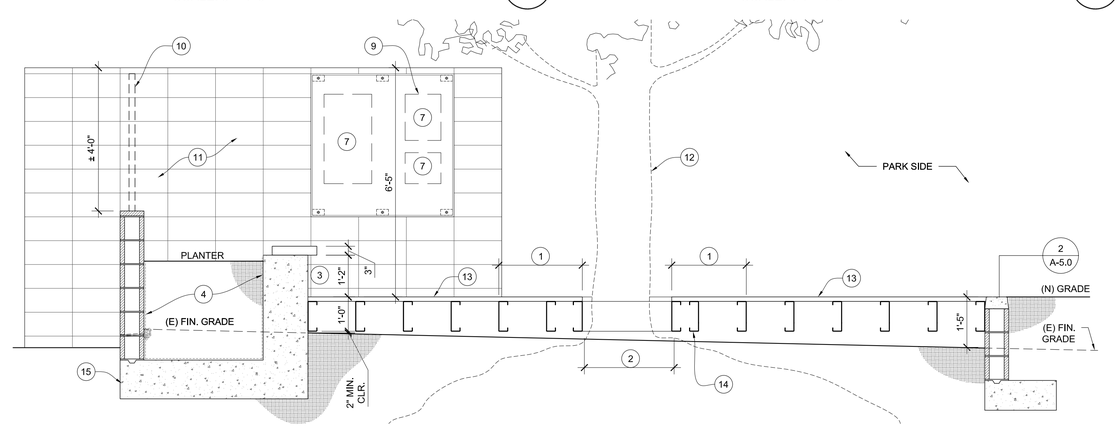


**KEYNOTE:**

1. REMOVABLE DECKING AROUND TREE TRUNK.
2. OPENING TO FIT (E) TREE TRUNK, VERIFY SIZE
3. FORM WITH ARCHITECTURAL CONCRETE FORM LINER AT ALL EXPOSED SURFACES. SAC CONCRETE AS REQUIRED & SEAL CONCRETE SURFACES
4. WATERPROOFING AND DRAIN BOARD
5. WEEP HOLE
6. PAINTED ONE COAT PRIMER , TWO COATS ACRYLIC PAINT
7. CONTROL PANELS
8. SEPARATE DISSIMILAR METALS TO AVOID GALVANIC REACTION
9. GALV. STEEL REMOVALABLE ACCESS PANEL - SEE NOTE #6
10. FENCE SYSTEM
11. NEW CMU WALL
12. (E) TREE
13. (N) TREX DECKING - SEE DETAIL #2/A-5.1
14. 10", 12GA. JOISTS GALV. STEEL @ 16" O.C
15. SEE DETAIL #7/A-5.0 FOR REINFORCING

## PARTIAL SECTIONAL DETAIL (1)
SCALE: 1/2"= 1'-0" (ALTERNATE COST)


RTK Architects, Inc.
Architecture • Planning • Interior
www.rtkarchitects.com
3975 Landmark St. Ste.#400 Culver City, CA 90232 310 / 837-3806


| No. | Date | By | Revision |
|---|---|---|---|
| | | | |

| | |
|---|---|
| BID SET | |
| Job No. | 1511800 |
| Submittal | |
| Issue Date | 4/12/16 |
| Drawn By | |
| Checked By | |

DETAILS

CITY OF BEVERLY HILLS DOG PARK
344 FOOTHILL ROAD
BEVERLY HILLS, CA 90210

A-5.1

5/2/16

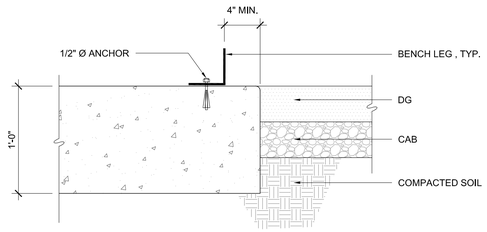


## BENCH BASE ANCHORAGE (9)
SCALE: 1-1/2" = 1'-0"

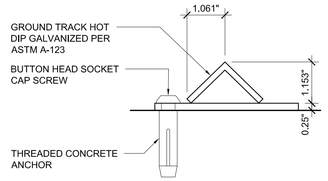


## GROUND TRACK DETAIL (6B)
SCALE: 6"= 1'-0"

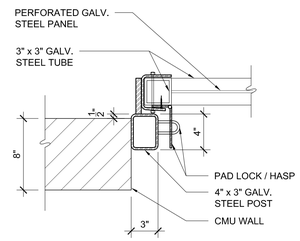


## JAMB DETAIL (6A)
SCALE: 1-1/2" = 1'-0"

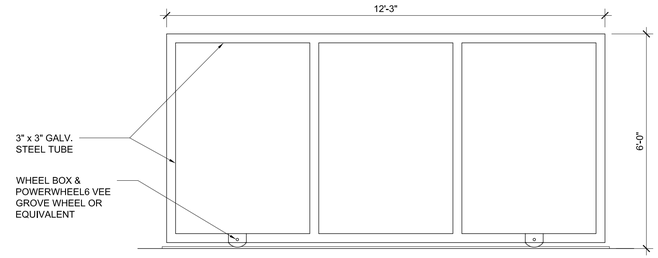


## GATE FRAME (2C)

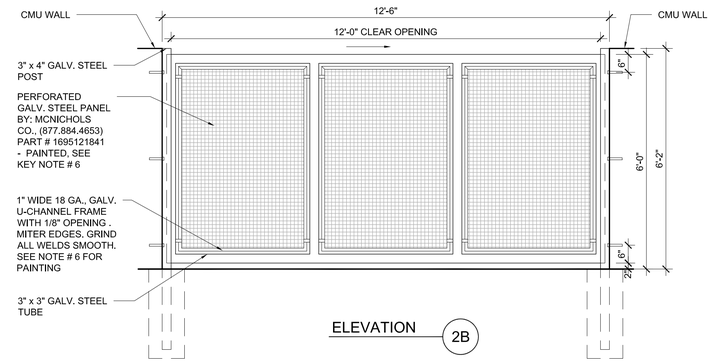


## ELEVATION (2B)

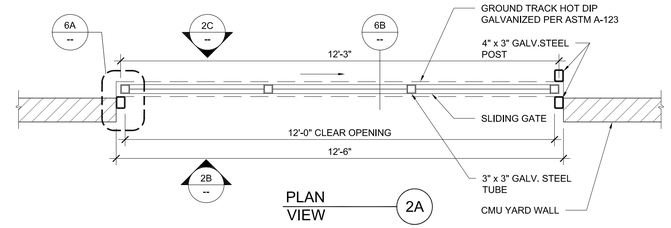


## PLAN VIEW (2A)

## SLIDING GATE DETAIL (2)
SCALE: 1/2"= 1'-0"

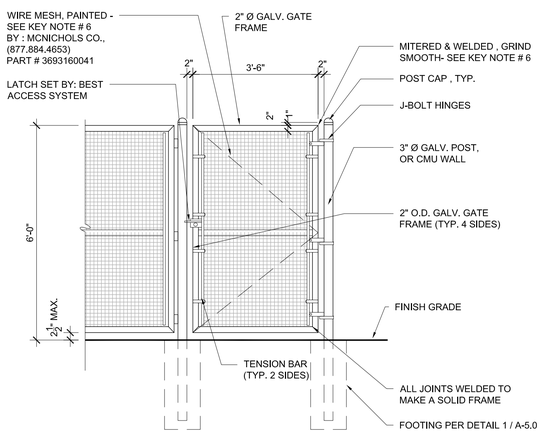


## GATE DETAIL (8)
SCALE: 1/2"= 1'-0"

## SLIDING GATE JAMB & GROUND TRACK DETAIL (6)

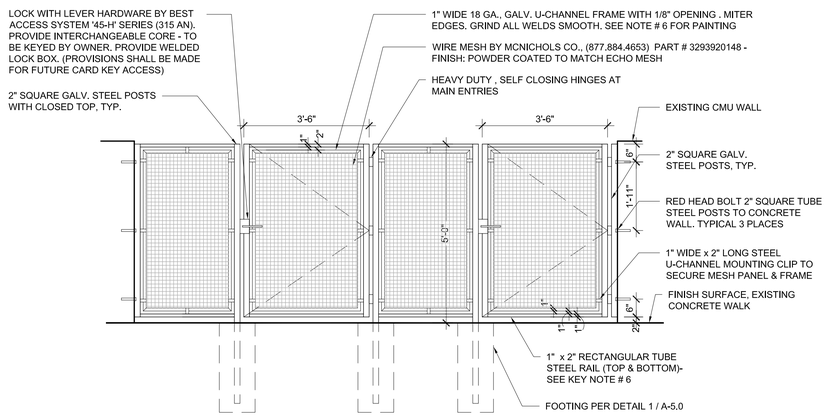


## GATE AND FENCE DETAIL (5)
SCALE: 1/2"= 1'-0"

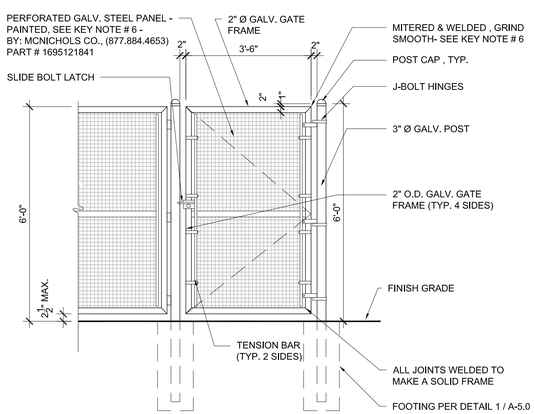


## GATE DETAIL (7)
SCALE: 1/2"= 1'-0"

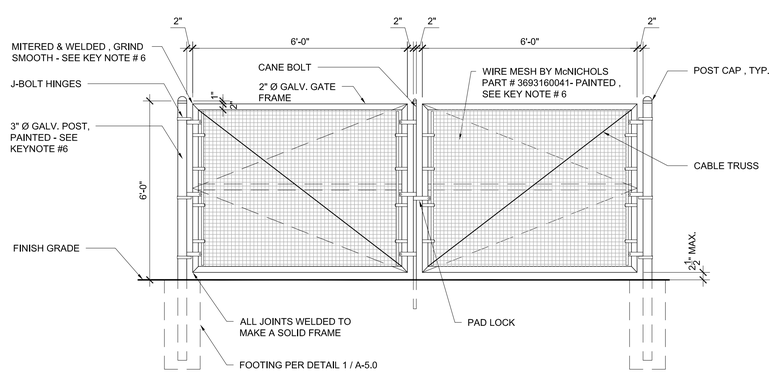


## GATE DETAIL (4)
SCALE: 1/2"= 1'-0"

NOTES:
1. ALL WELDS SHALL BE CONTINUOUS WELDS
2. GRIND ALL WELDS SMOOTH AFTER FABRICATION
3. FINISH ON GUARD RAILS POSTS, AND MOUNTING CLIPS SHALL BE PAINTED (REFER TO NOTE #7.)
4. CONTRACTOR SHALL PROVIDE SHOP DRAWINGS FOR APPROVAL PRIOR TO FABRICATION OF FENCE AND GATES
5. ALL PIPES SHALL BE SCH 40 GALVANIZED
6. ALL PAINTED METAL SURFACES SHALL BE PAINTED WITH ONE COAT OF PRIMER & TWO COATS OF ACRYLIC PAINT IN CHOSEN COLOR , OR EQUAL
7. PRIOR TO PAINTING , CONTRACTOR SHALL SCRAPE, POWER TOOL CLEAN, AND SAND SURFACE ALL METAL SURFACES THAT SHALL BE PAINTED TO REMOVE DIRT, DUST, GREASE, LOOSE SHOP PRIME, OIL, RUST, SCALE, ETC...
8. CONTRACTOR SHALL FIELD VERIFY ALL POST DISTANCES AND CURB HEIGHT MEASUREMENTS PRIOR TO PANEL FABRICATION
9. STEEL TUBE SHALL BE PER ASTM -A-500 OR EQUIVALENT
10. STEEL ANGLES SHALL BE PER ASTM-A-36
11. ALL STEEL MEMBERS SHALL BE HOT DIP GALVANIZED, FOR FINISH SEE SPECIFIC DETAILS

## GATE AND FENCE KEY NOTES (1)


RTK
RTK Architects, Inc.
Architecture ▪ Planning ▪ Interior
www.rtkarchitects.com
3975 Landmark St. Ste.#400 Culver City, CA 90232 310 / 837-3806


| No. | Date | By | Revision |
|---|---|---|---|
| | | | |

| | |
|---|---|
| BID SET | |
| Job No. | 1511800 |
| Submittal | |
| Issue Date | 4/12/16 |
| Drawn By | |
| Checked By | |

DETAILS

CITY OF BEVERLY HILLS DOG PARK
344 FOOTHILL ROAD
BEVERLY HILLS, CA 90210

A-5.2
5/2/16

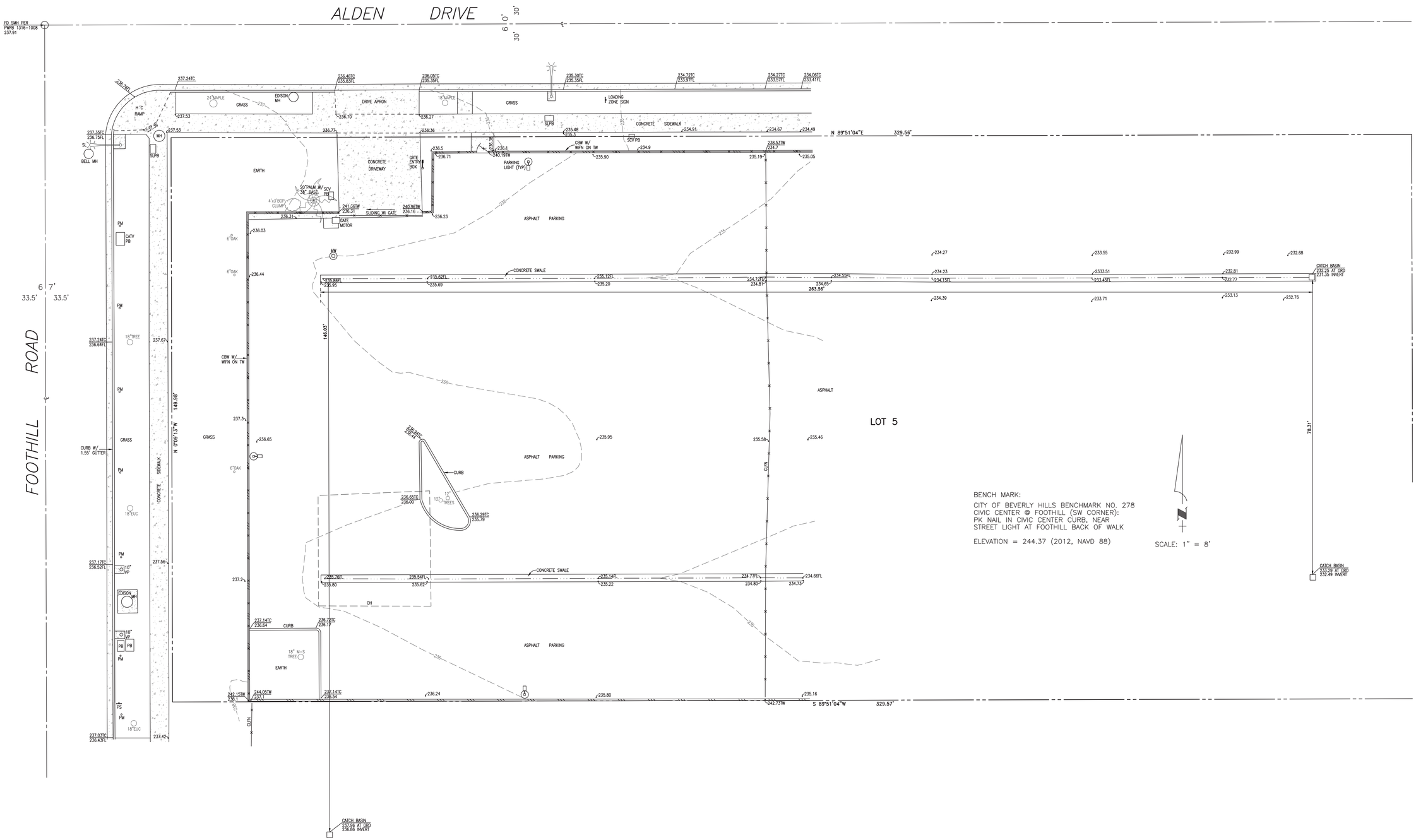
ALDEN DRIVE
FOOTHILL ROAD
FD. SMH. PER PWFB 1316-1008 237.91
N 89°51'04"E 329.56'
S 89°51'04"W 329.57'
N 0°09'13"W 149.98'
149.03'
263.56'
78.31'
LOT 5
ASPHALT PARKING
CONCRETE SWALE
CATCH BASIN 232.35 AT GRD 231.35 INVERT
CATCH BASIN 233.29 AT GRD 232.49 INVERT
CATCH BASIN 237.96 AT GRD 236.86 INVERT
CONCRETE DRIVEWAY
CONCRETE SIDEWALK
DRIVE APRON
GATE ENTRY BOX
SLIDING WI GATE
GATE MOTOR
PARKING LIGHT (TYP)
LOADING ZONE SIGN
EDISON MH
BELL MH
CATV PB
CURB W/ 1.55' GUTTER
CURB
EARTH
GRASS
OH
BENCH MARK:
CITY OF BEVERLY HILLS BENCHMARK NO. 278
CIVIC CENTER @ FOOTHILL (SW CORNER):
PK NAIL IN CIVIC CENTER CURB, NEAR
STREET LIGHT AT FOOTHILL BACK OF WALK
ELEVATION = 244.37 (2012, NAVD 88)
SCALE: 1" = 8'