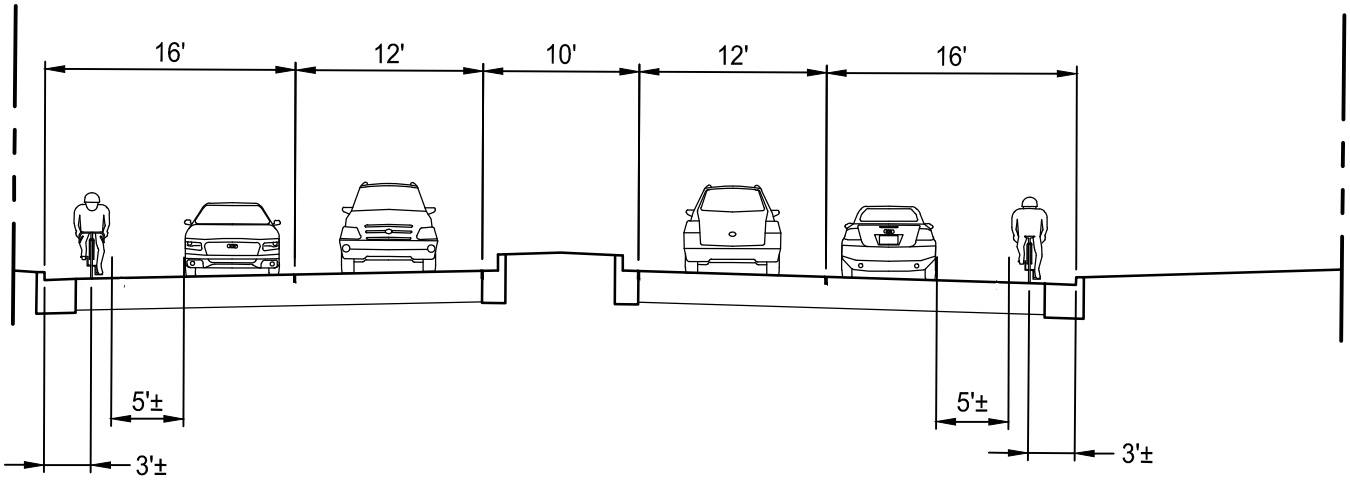

IMPROVED 66' ROADWAY SECTION

Increased Road Width (Curb to Curb)

LOOKING WEST

W:\1BEV041000\ENGR\EXHIB\NSMB-019_66ft-Sect-w-Bike-Lane.dwg Wed.,15 Jan.2014 - 1:15pm Plotted by: dhewlett

PSOMAS

EXHIBIT 1

NORTH SANTA MONICA BLVD. RECONSTRUCTION

BICYCLE CLEARANCE EXHIBIT

BEVERLY HILLS

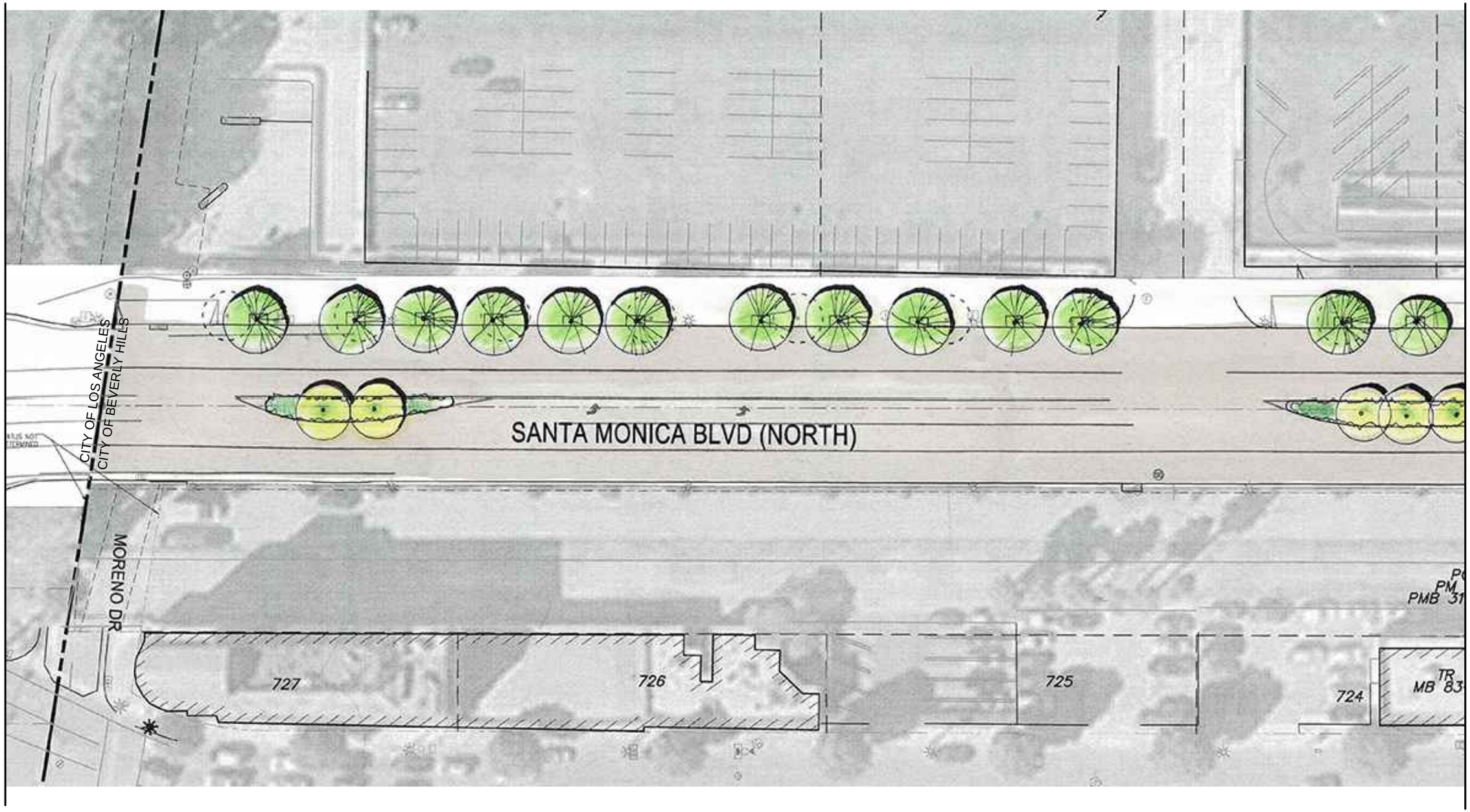

C:\adsk2012\tempfiles\tempdwgs\AcPublish_4604\NSMB-024-00_Gruen-Median-Green.dwg Fri,17 Jan,2014 - 3:21pm Plotted by: dhewlett

PSOMAS

SHEET 1 of 17

EXHIBIT 2

NORTH SANTA MONICA BLVD. RECONSTRUCTION

CANDIDATE MEDIAN LOCATIONS EXHIBIT

BEVERLY HILLS

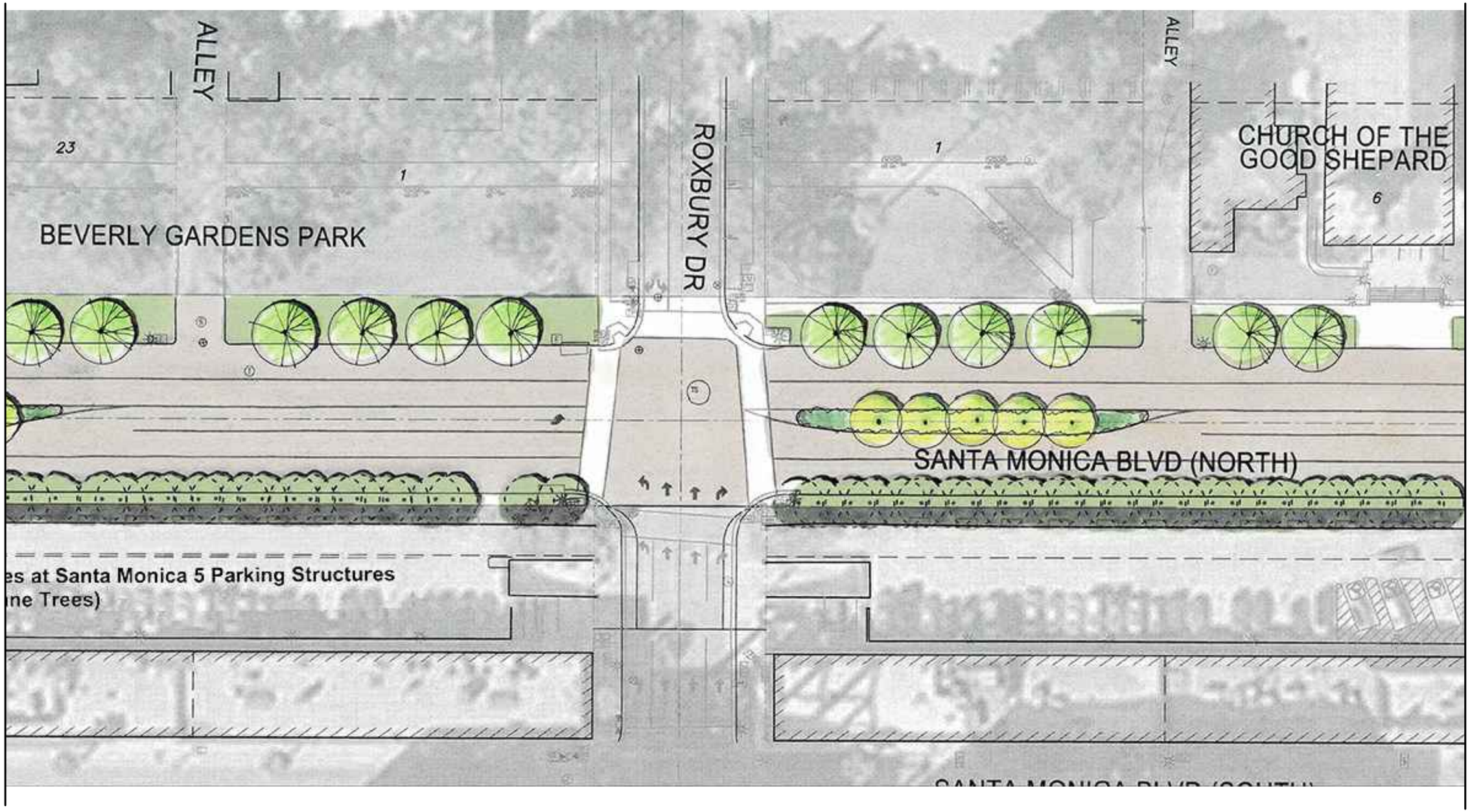

MATCHLINE - SEE SHEET 4

MATCHLINE - SEE SHEET 6

C:\odsk2012\tempfiles\tempdwgs\AcPublish_4604\NSMB-024-00_Gruen-Median-Green.dwg Fri,17 Jan,2014 - 3:21pm Plotted by: dhewlett

PSOMAS

EXHIBIT 2

NORTH SANTA MONICA BLVD.
RECONSTRUCTION
CANDIDATE MEDIAN LOCATIONS EXHIBIT

BEVERLY HILLS

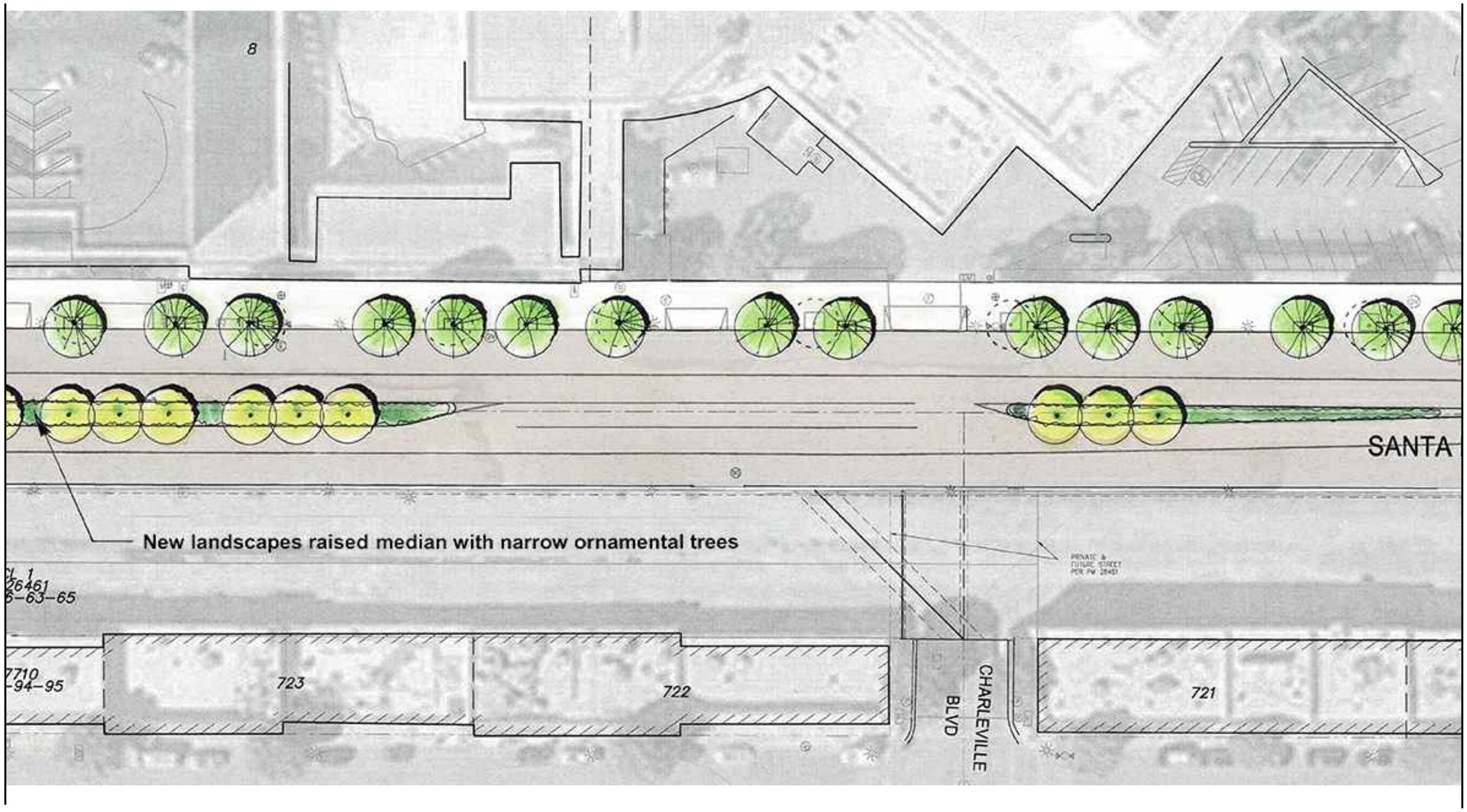

C:\adsk2012\tempfiles\tempdwgs\AcPublish_4604\NSMB-024-00_Gruen-Median-Green.dwg Fri,17 Jan 2014 - 3:21pm Plotted by: dhewlett

PSOMAS

SHEET 2 of 17

EXHIBIT 2

NORTH SANTA MONICA BLVD. RECONSTRUCTION

CANDIDATE MEDIAN LOCATIONS EXHIBIT

BEVERLY HILLS

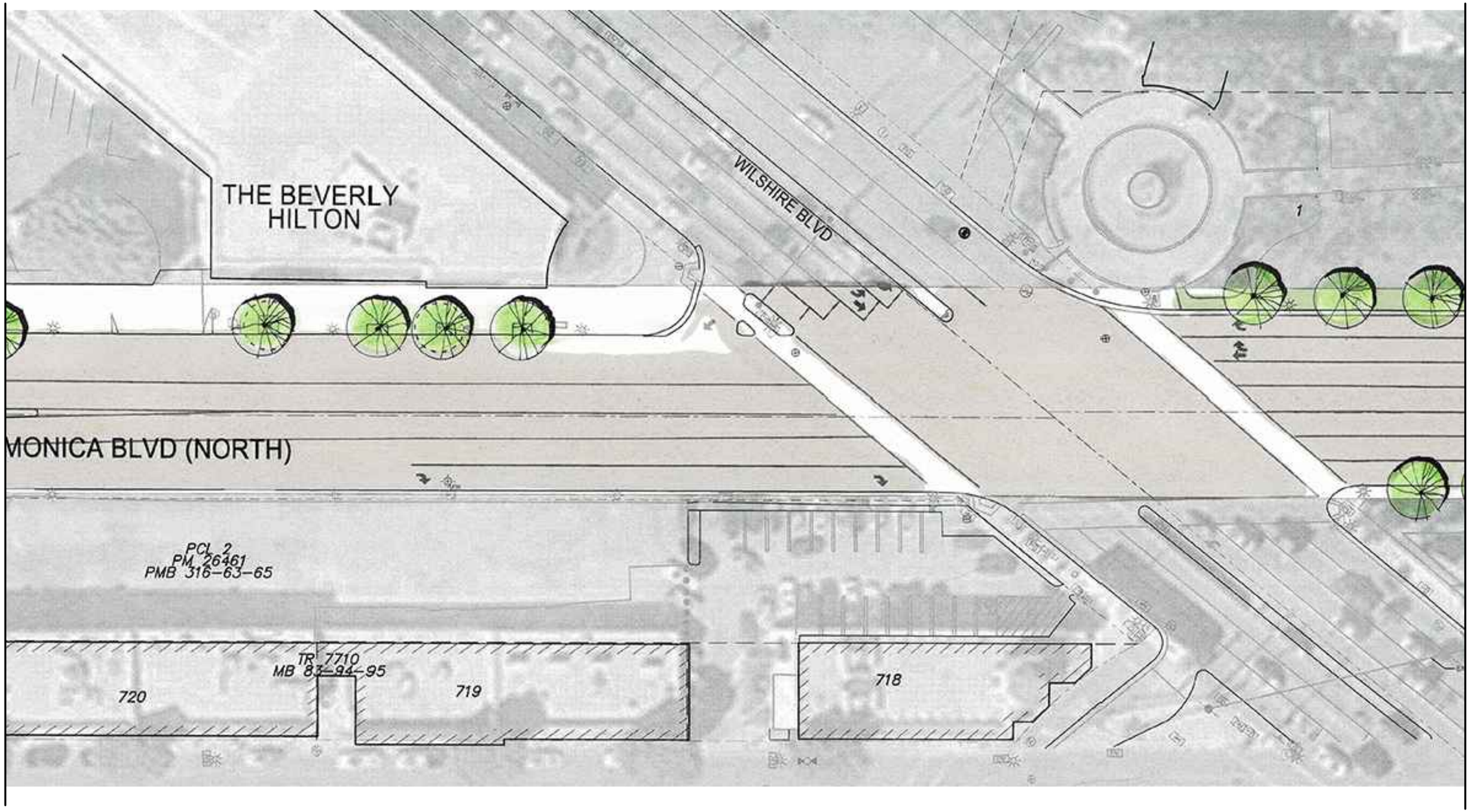

C:\adsk2012\tempfiles\tempdwgs\AcPublish_4604\NSMB-024-00_Gruen-Median-Green.dwg Fri,17 Jan,2014 - 3:21pm Plotted by: dhewlett

PSOMAS

SHEET 3 of 17

EXHIBIT 2

NORTH SANTA MONICA BLVD. RECONSTRUCTION

CANDIDATE MEDIAN LOCATIONS EXHIBIT

BEVERLY HILLS

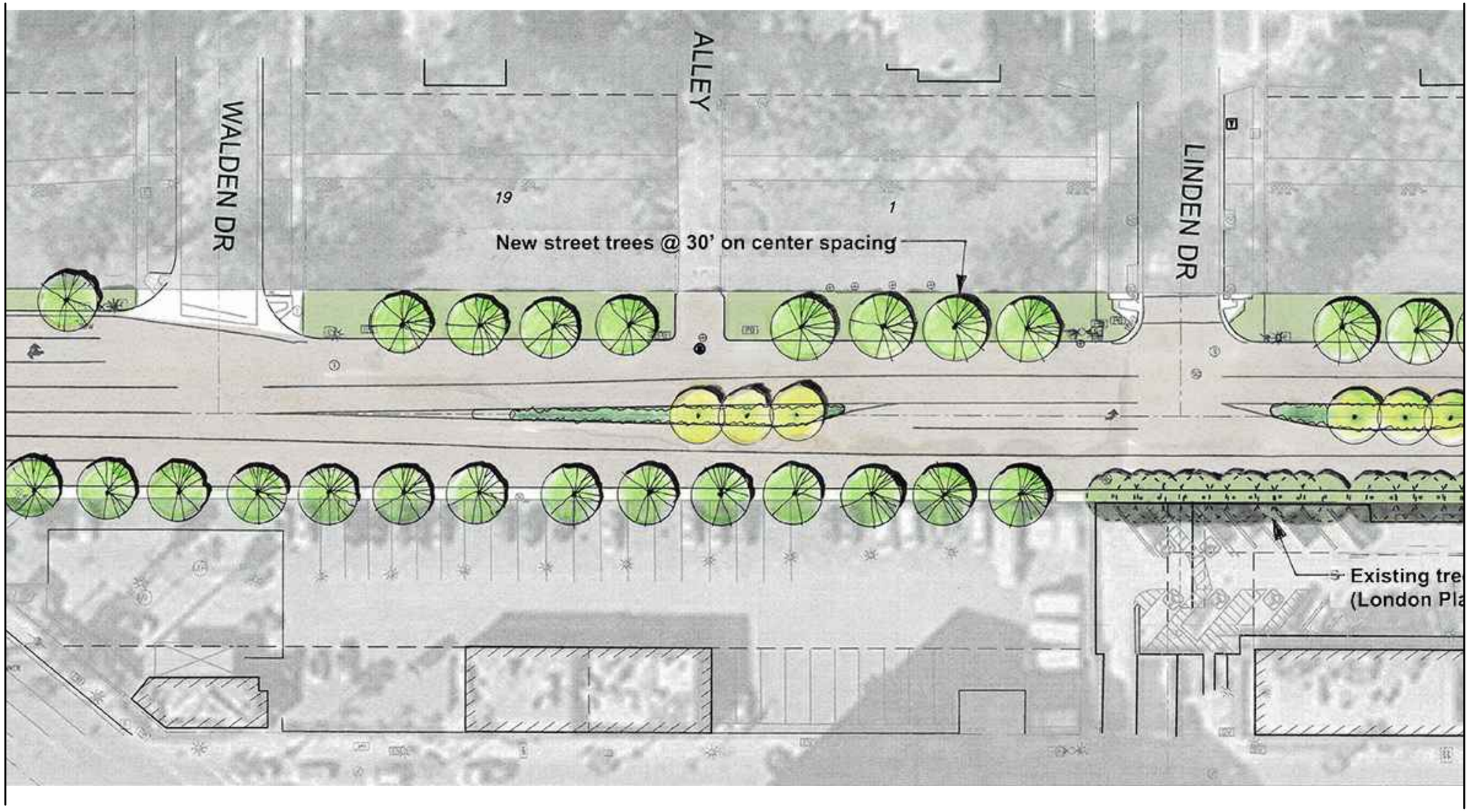

C:\adsk2012\tempfiles\tempdwgs\AcPublish_4604\NSMB-024-00_Gruen-Median-Green.dwg Fri,17 Jan 2014 - 3:21pm Plotted by: dhewlett

PSOMAS

SHEET 4 of 17

EXHIBIT 2

NORTH SANTA MONICA BLVD. RECONSTRUCTION

CANDIDATE MEDIAN LOCATIONS EXHIBIT

BEVERLY HILLS

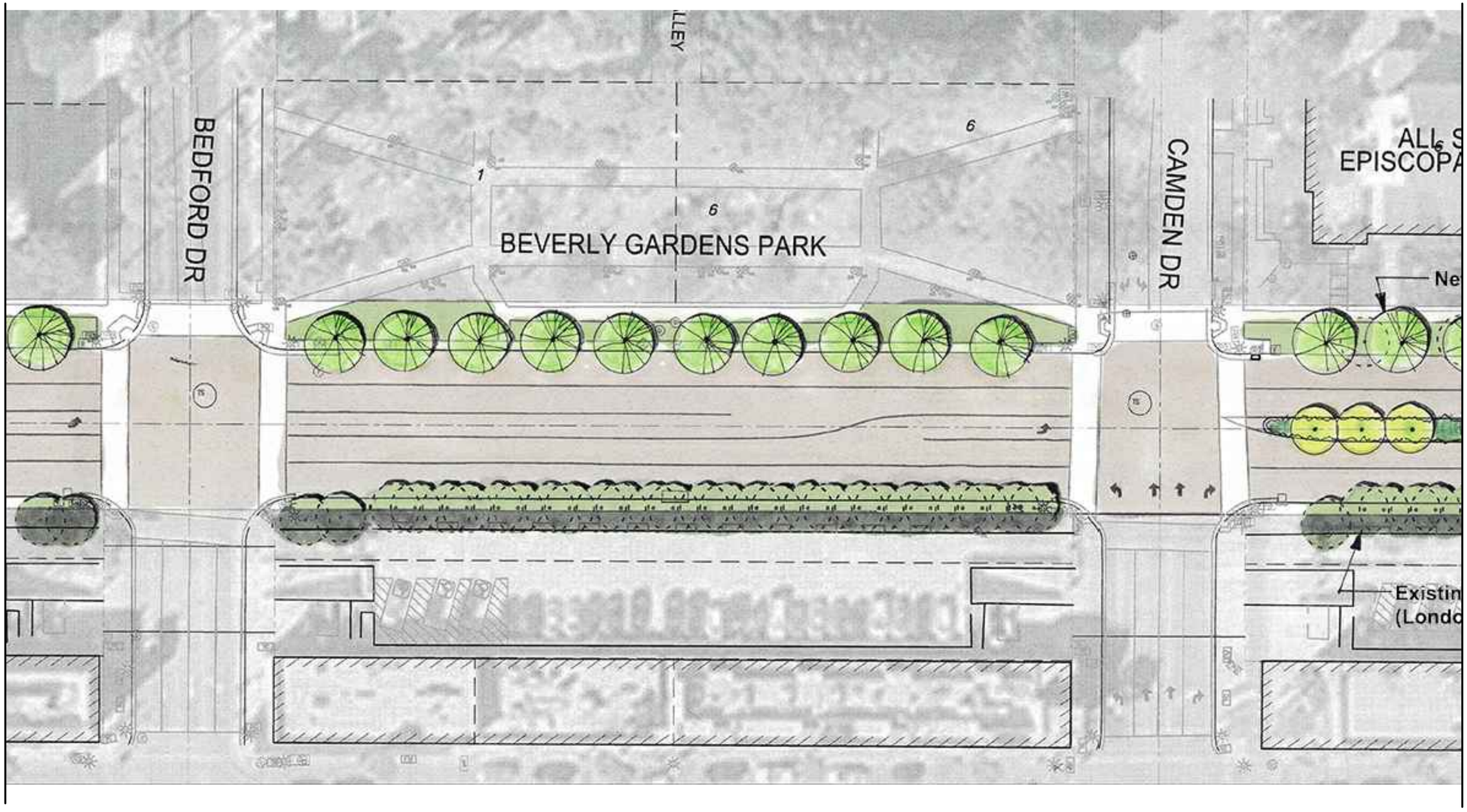

C:\odsk2012\tempfiles\tempdwgs\AcPublish_4604\NSMB-024-00_Gruen-Median-Green.dwg Fri,17 Jan 2014 - 3:21pm Plotted by: dhewlett

PSOMAS

SHEET 6 of 17

EXHIBIT 2

NORTH SANTA MONICA BLVD. RECONSTRUCTION

CANDIDATE MEDIAN LOCATIONS EXHIBIT

BEVERLY HILLS

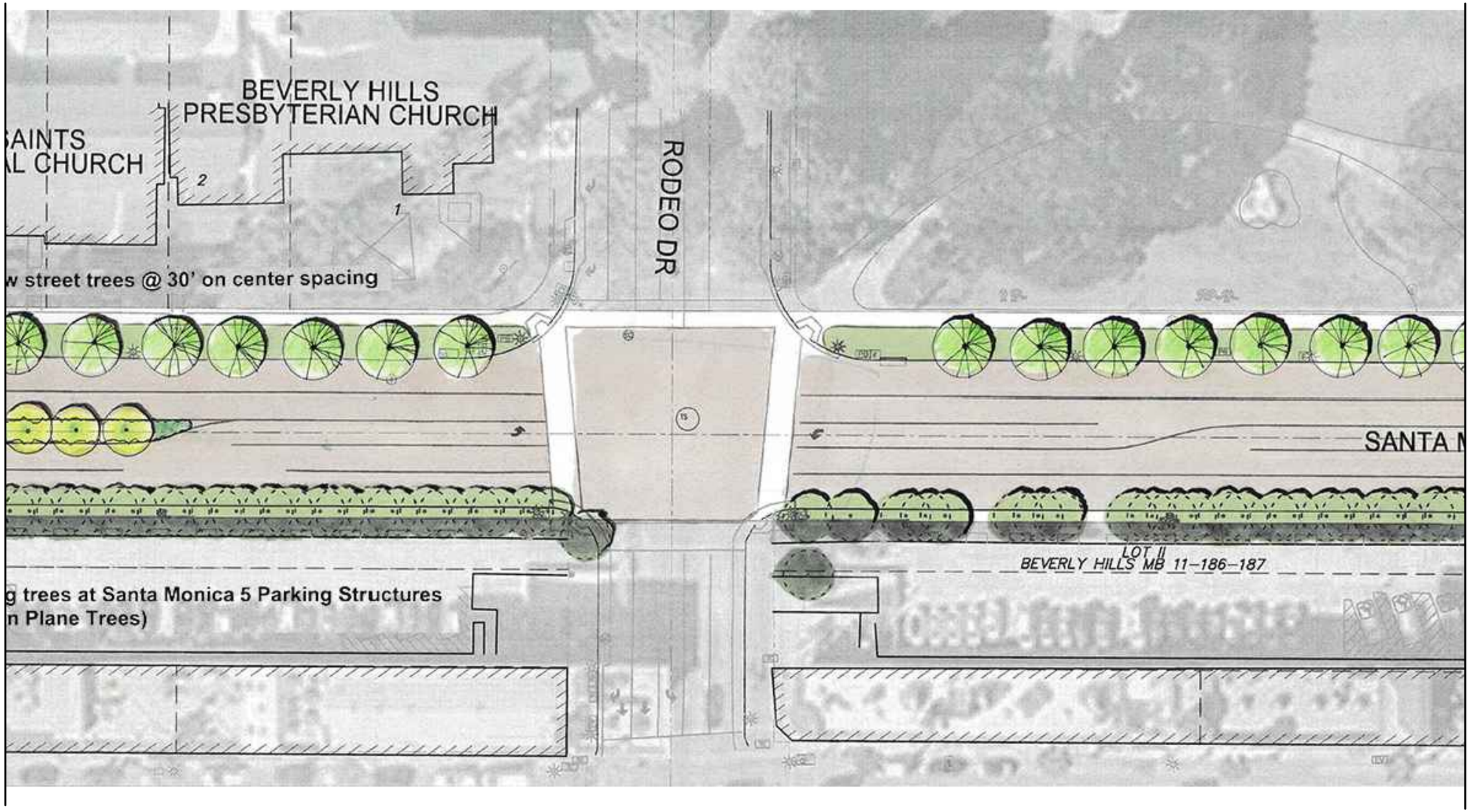

C:\odsk2012\tempfiles\tempdwgs\AcPublish_4604\NSMB-024-00_Gruen-Median-Green.dwg Fri,17 Jan,2014 - 3:21pm Plotted by: dhewlett

PSOMAS

SHEET 7 of 17

EXHIBIT 2

NORTH SANTA MONICA BLVD.
RECONSTRUCTION
CANDIDATE MEDIAN LOCATIONS EXHIBIT

BEVERLY HILLS

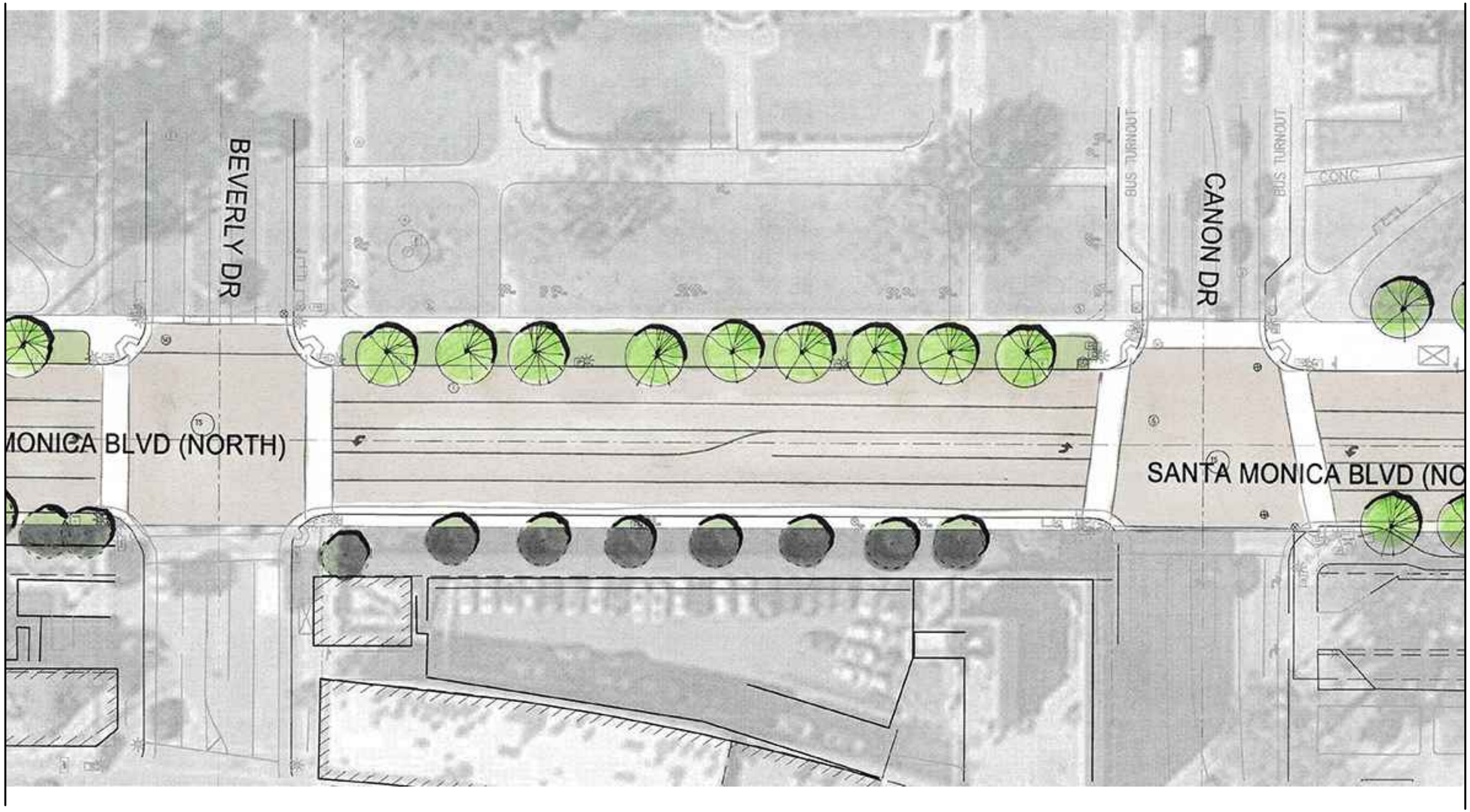

C:\odsk2012\tempfiles\tempdwgs\AcPublish_4604\NSMB-024-00_Gruen-Median-Green.dwg Fri,17 Jan,2014 - 3:21pm Plotted by: dhewlett

PSOMAS

SHEET 8 of 17

EXHIBIT 2

NORTH SANTA MONICA BLVD. RECONSTRUCTION

CANDIDATE MEDIAN LOCATIONS EXHIBIT

BEVERLY HILLS

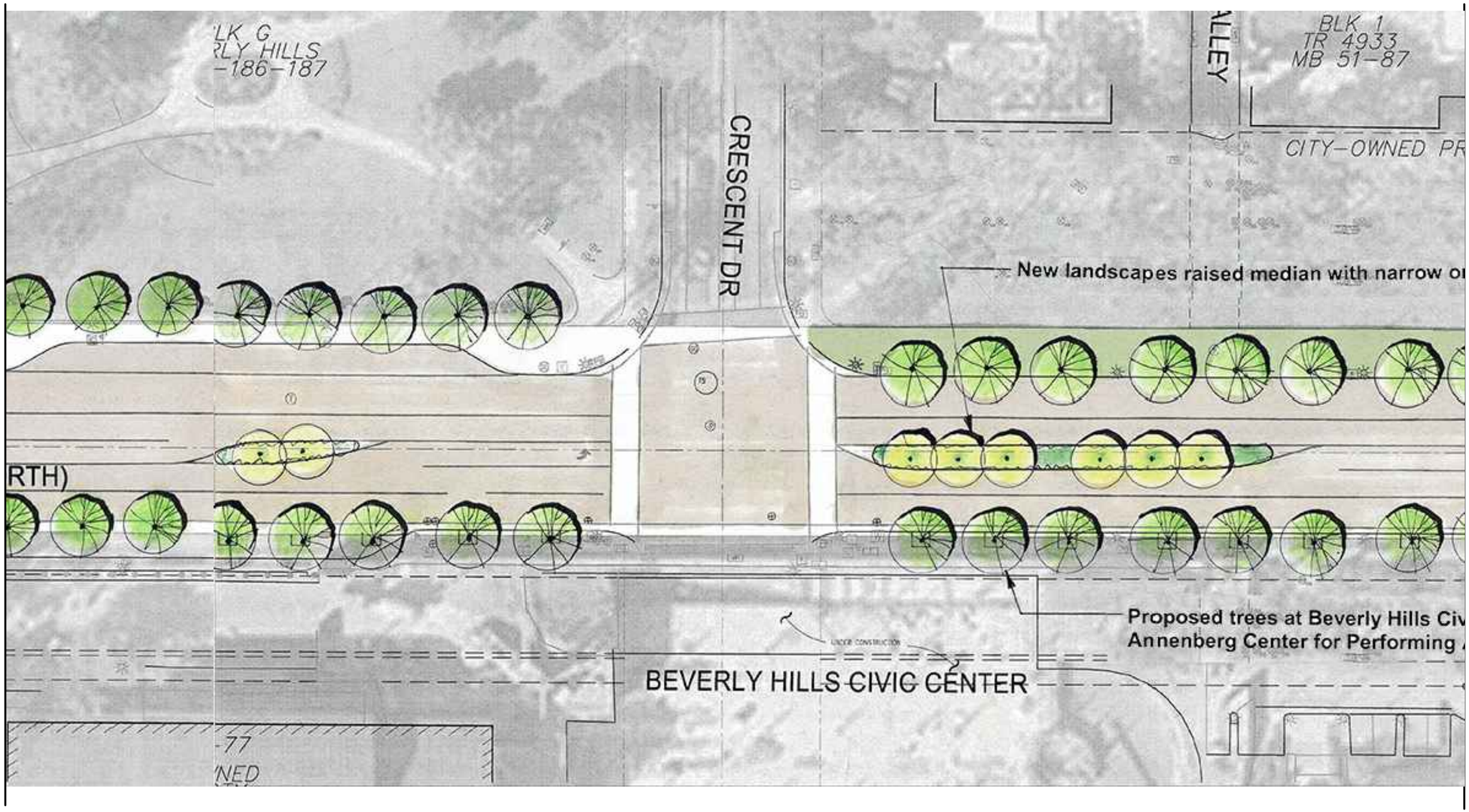

C:\adsk2012\tempfiles\tempdwgs\AcPublish_4604\NSMB-024-00_Gruen-Median-Green.dwg Fri,17 Jan 2014 - 3:21pm Plotted by: dhewlett

PSOMAS

SHEET 9 of 17

EXHIBIT 2

NORTH SANTA MONICA BLVD. RECONSTRUCTION

CANDIDATE MEDIAN LOCATIONS EXHIBIT

BEVERLY HILLS

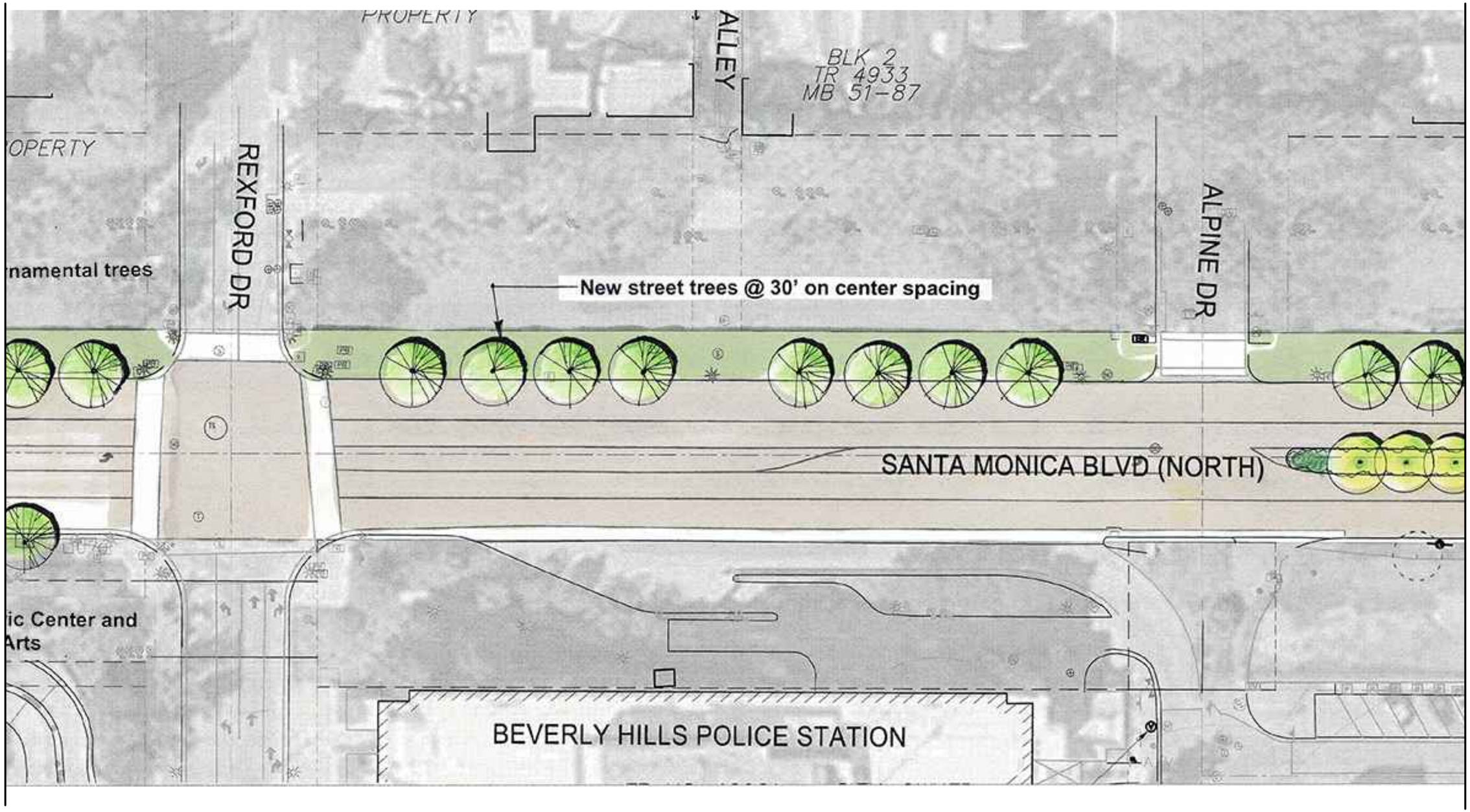

MATCHLINE - SEE SHEET 9

MATCHLINE - SEE SHEET 11

C:\odsk2012\tempfiles\tempdwgs\AcPublish_4604\NSMB-024-00_Gruen-Median-Green.dwg Fri,17 Jan 2014 - 3:21pm Plotted by: dhewlett

PSOMAS

EXHIBIT 2

NORTH SANTA MONICA BLVD.
RECONSTRUCTION
CANDIDATE MEDIAN LOCATIONS EXHIBIT

BEVERLY HILLS

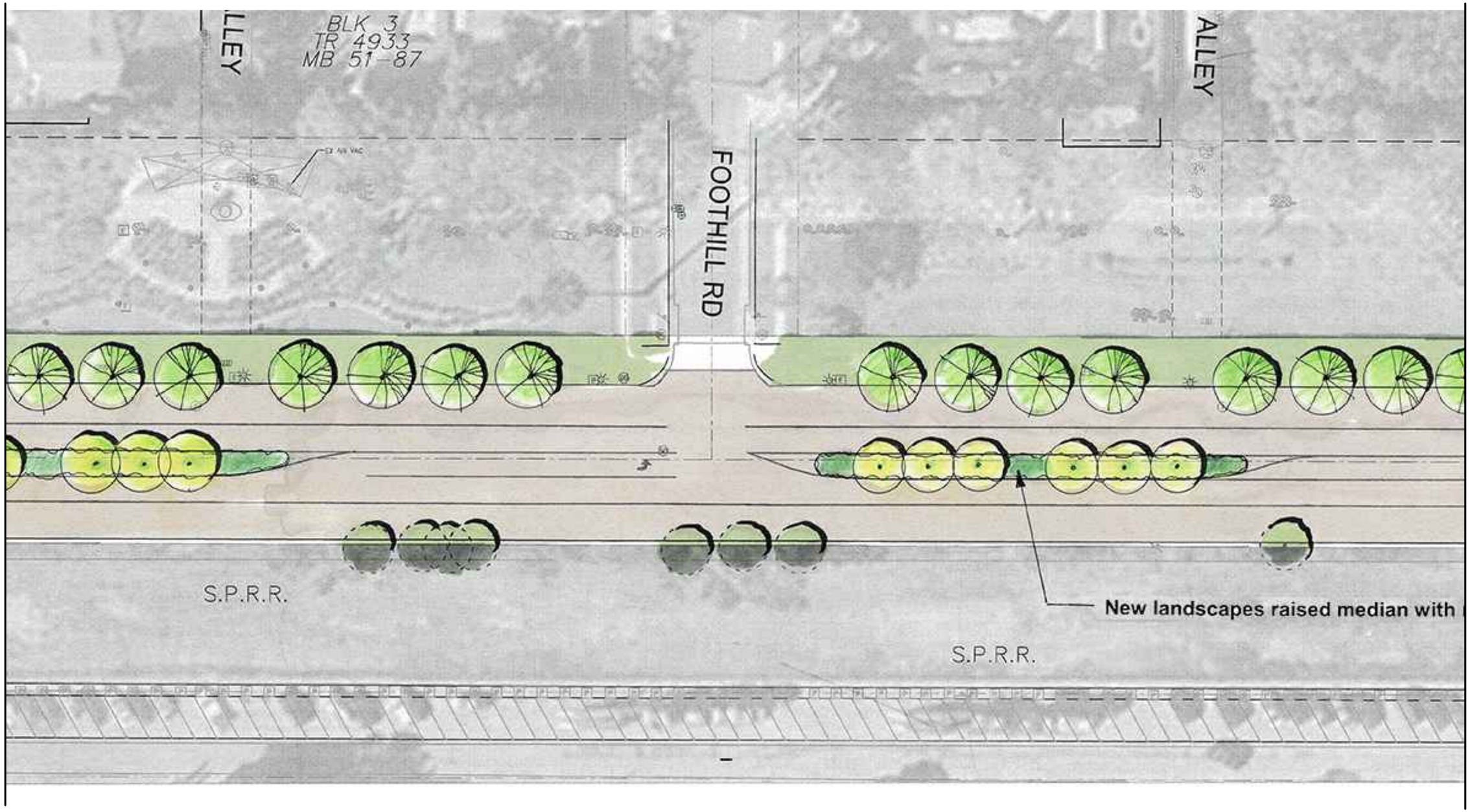

C:\odsk2012\tempfiles\tempdwgs\AcPublish_4604\NSMB-024-00_Gruen-Median-Green.dwg Fri,17 Jan 2014 - 3:21pm Plotted by: dhewlett

PSOMAS

SHEET 11 of 17

EXHIBIT 2

NORTH SANTA MONICA BLVD. RECONSTRUCTION

CANDIDATE MEDIAN LOCATIONS EXHIBIT

BEVERLY HILLS

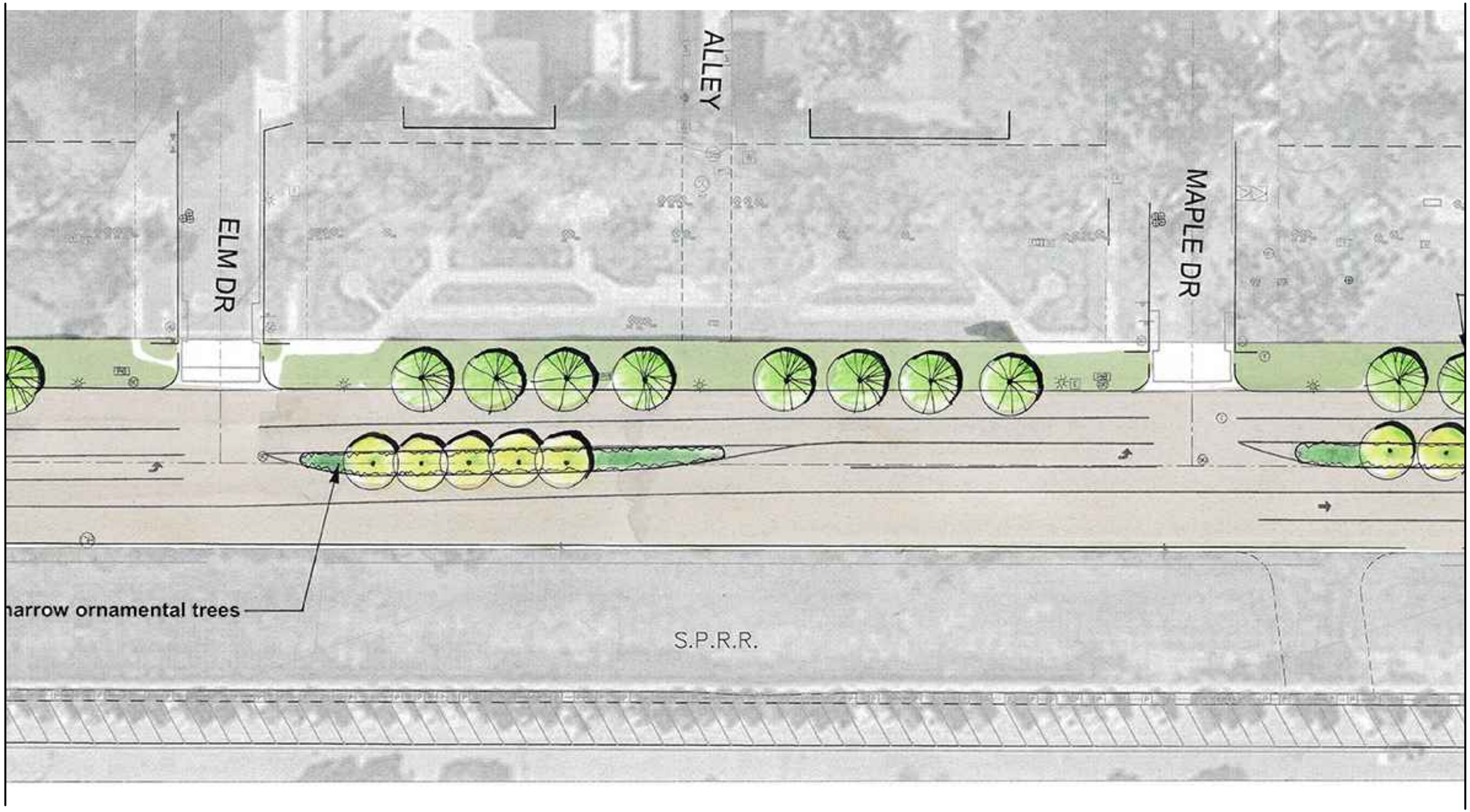

C:\odsk2012\tempfiles\tempdwgs\AcPublish_4604\NSMB-024-00_Gruen-Median-Green.dwg Fri,17 Jan 2014 - 3:21pm Plotted by: dhewlett

PSOMAS

SHEET 12 of 17

EXHIBIT 2

NORTH SANTA MONICA BLVD. RECONSTRUCTION

CANDIDATE MEDIAN LOCATIONS EXHIBIT

BEVERLY HILLS

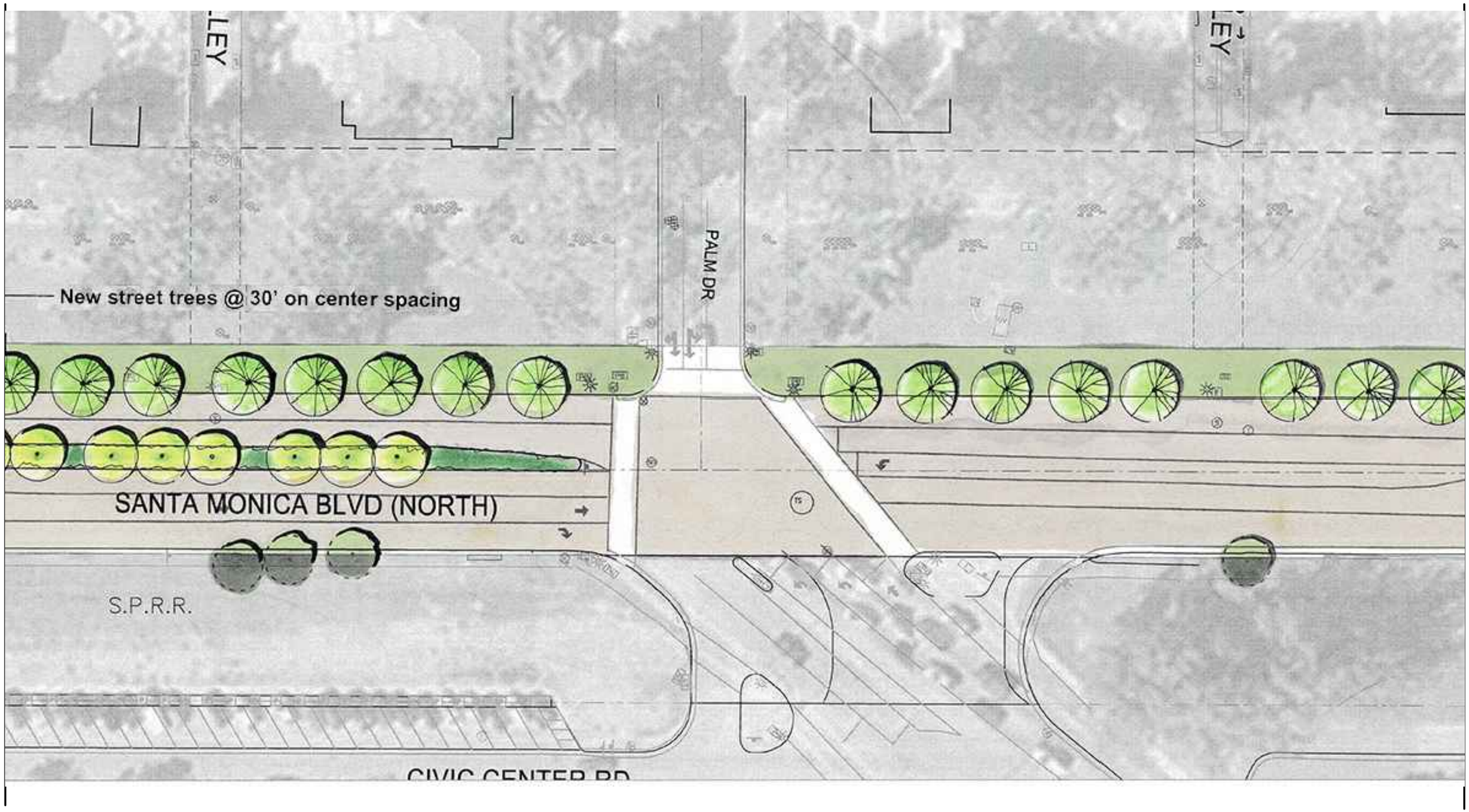

C:\adsk2012\tempfiles\tempdwgs\AcPublish_4604\NSMB-024-00_Gruen-Median-Green.dwg Fri,17 Jan 2014 - 3:22pm Plotted by: dhewlett

PSOMAS

SHEET 13 of 17

EXHIBIT 2

NORTH SANTA MONICA BLVD. RECONSTRUCTION

CANDIDATE MEDIAN LOCATIONS EXHIBIT

BEVERLY HILLS

C:\odsk2012\tempfiles\tempdwgs\AcPublish_4604\NSMB-024-00_Gruen-Median-Green.dwg Fri,17 Jan,2014 - 3:22pm Plotted by: dhewlett

PSOMAS

SHEET 14 of 17

EXHIBIT 2

NORTH SANTA MONICA BLVD.
RECONSTRUCTION
CANDIDATE MEDIAN LOCATIONS EXHIBIT

BEVERLY HILLS

C:\odsk2012\tempfiles\tempdwgs\AcPublish_4604\NSMB-024-00_Gruen-Median-Green.dwg Fri,17 Jan,2014 - 3:22pm Plotted by: dhewlett

PSOMAS

SHEET 15 of 17

EXHIBIT 2

NORTH SANTA MONICA BLVD. RECONSTRUCTION

CANDIDATE MEDIAN LOCATIONS EXHIBIT

BEVERLY HILLS

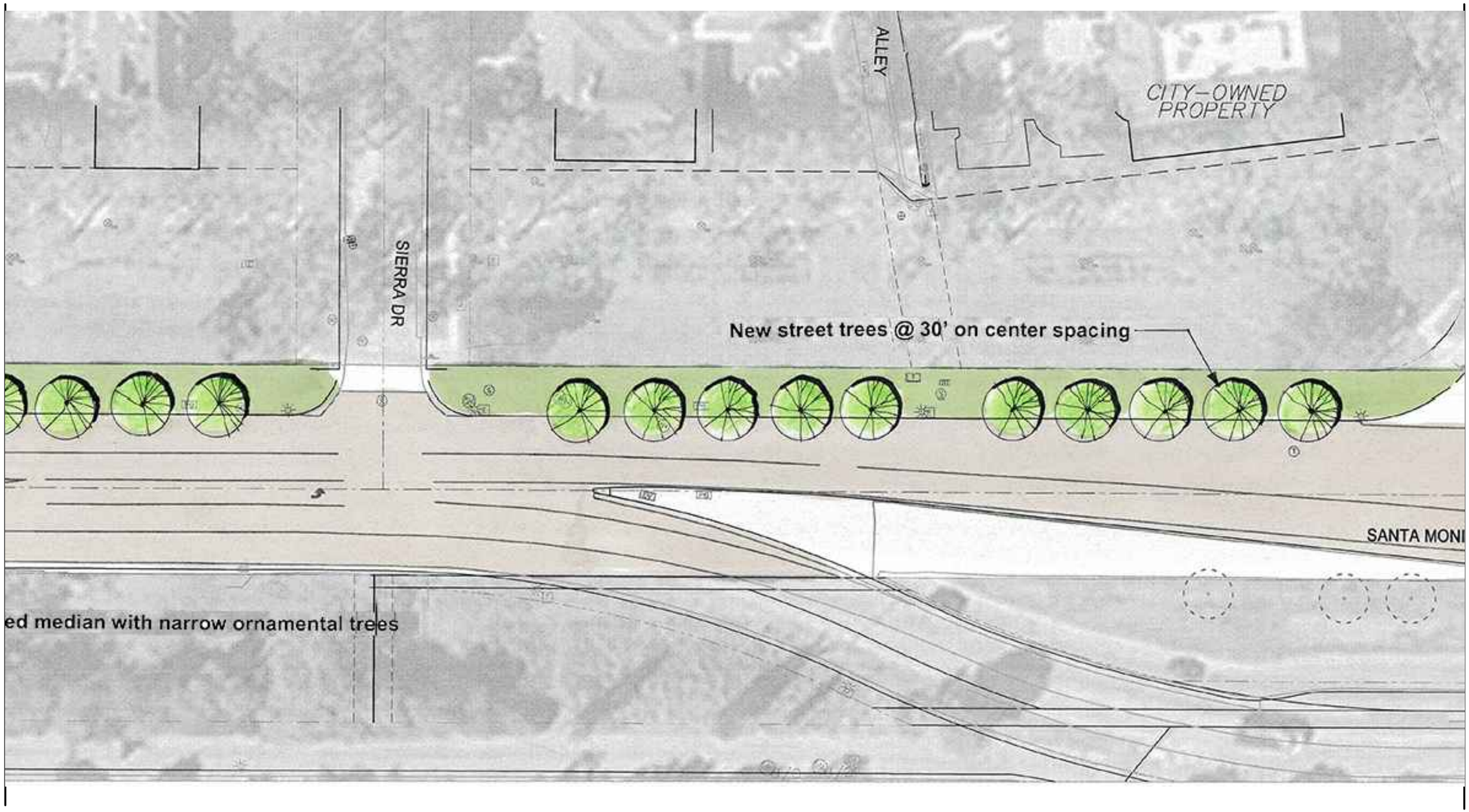

C:\adsk2012\tempfiles\tempdwgs\AcPublish_4604\NSMB-024-00_Gruen-Median-Green.dwg Fri,17 Jan,2014 – 3:22pm Plotted by: dhewlett

PSOMAS

SHEET 16 of 17

EXHIBIT 2

NORTH SANTA MONICA BLVD. RECONSTRUCTION

CANDIDATE MEDIAN LOCATIONS EXHIBIT

BEVERLY HILLS

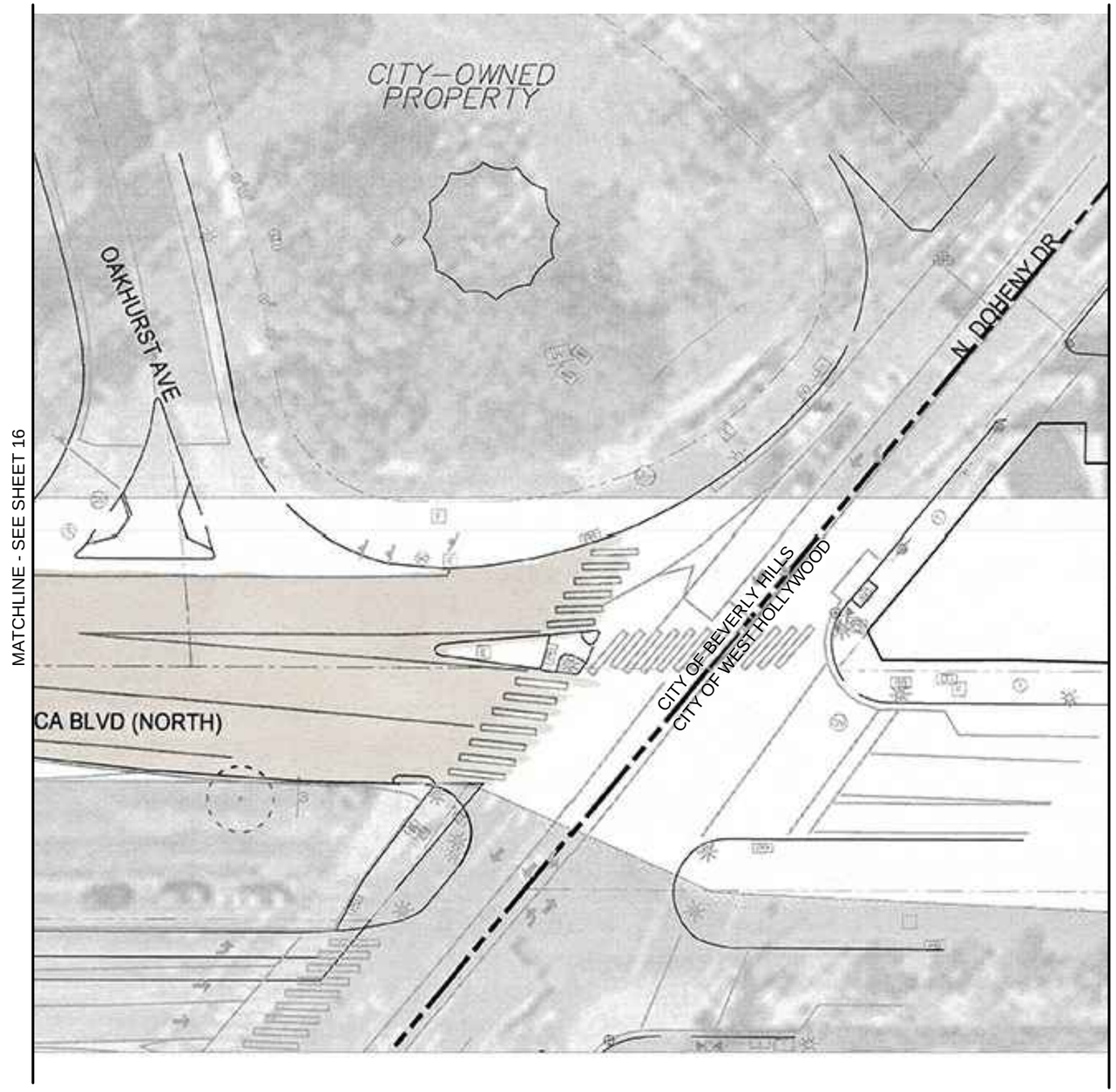

C:\odsk2012\tempfiles\tempdwgs\AcPublish_4604\NSMB-024-00_Gruen-Median-Green.dwg Fri,17 Jan2014 - 3:22pm Plotted by: dhewlett

PSOMAS

SHEET 17 of 17

EXHIBIT 2

NORTH SANTA MONICA BLVD. RECONSTRUCTION

CANDIDATE MEDIAN LOCATIONS EXHIBIT

BEVERLY HILLS

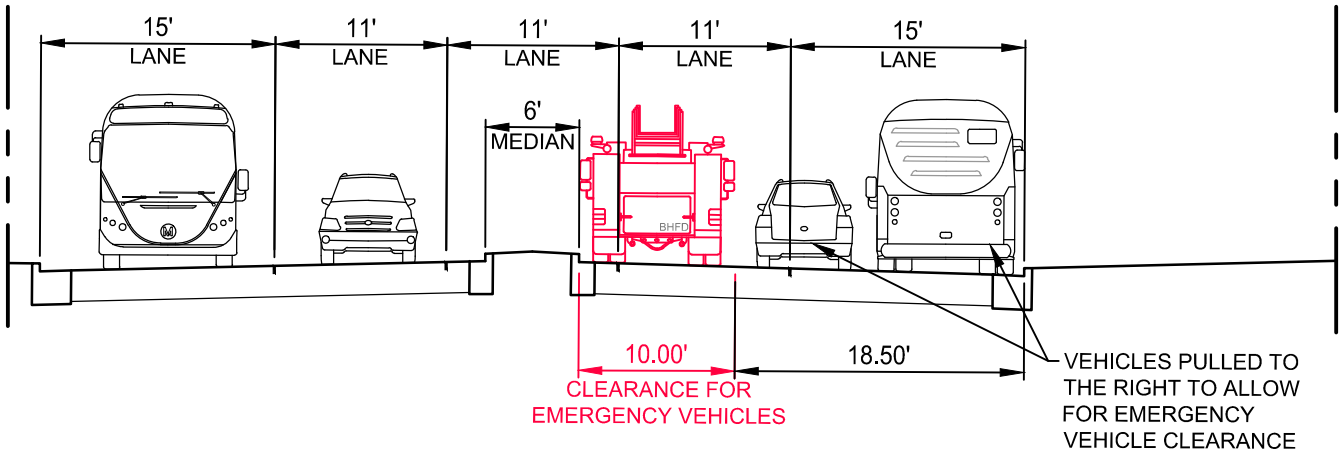

IMPROVED 63' ROADWAY SECTION

Maintain Existing Width (Curb to Curb)

LOOKING WEST

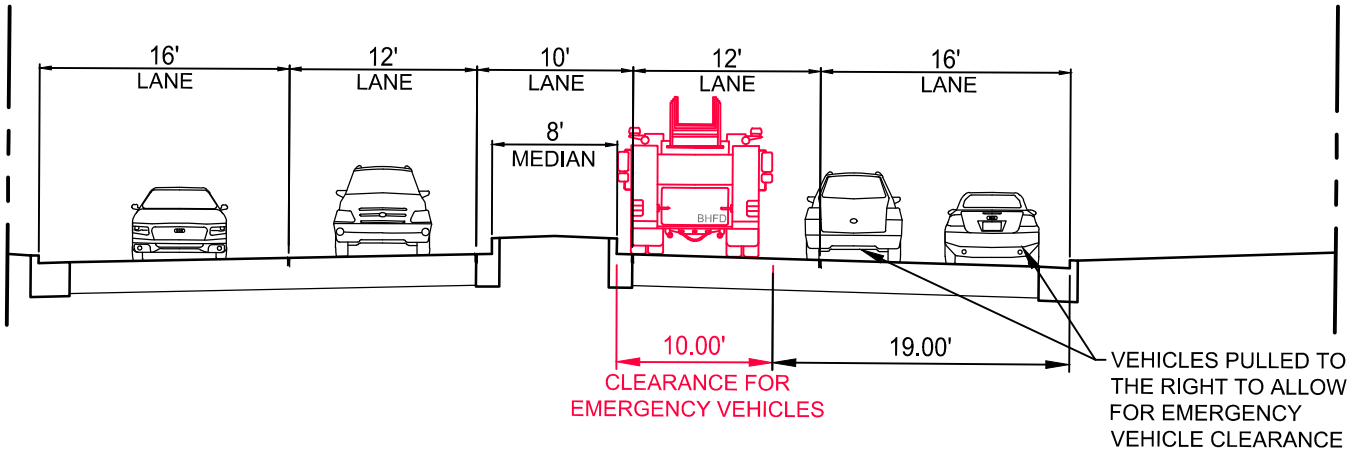

IMPROVED 66' ROADWAY SECTION

Increase Road Width (Curb to Curb)

LOOKING WEST

PSOMAS

EXHIBIT 3

NORTH SANTA MONICA BLVD. RECONSTRUCTION

EMERGENCY ACCESS CLEARANCE EXHIBIT

BEVERLY HILLS

W:\1BEV041000\ENGR\EXHIB\NSMB-020_Emergency Vehicle Sections.dwg Fri,17 Jan.2014 - 4:15pm Plotted by: dhewlett

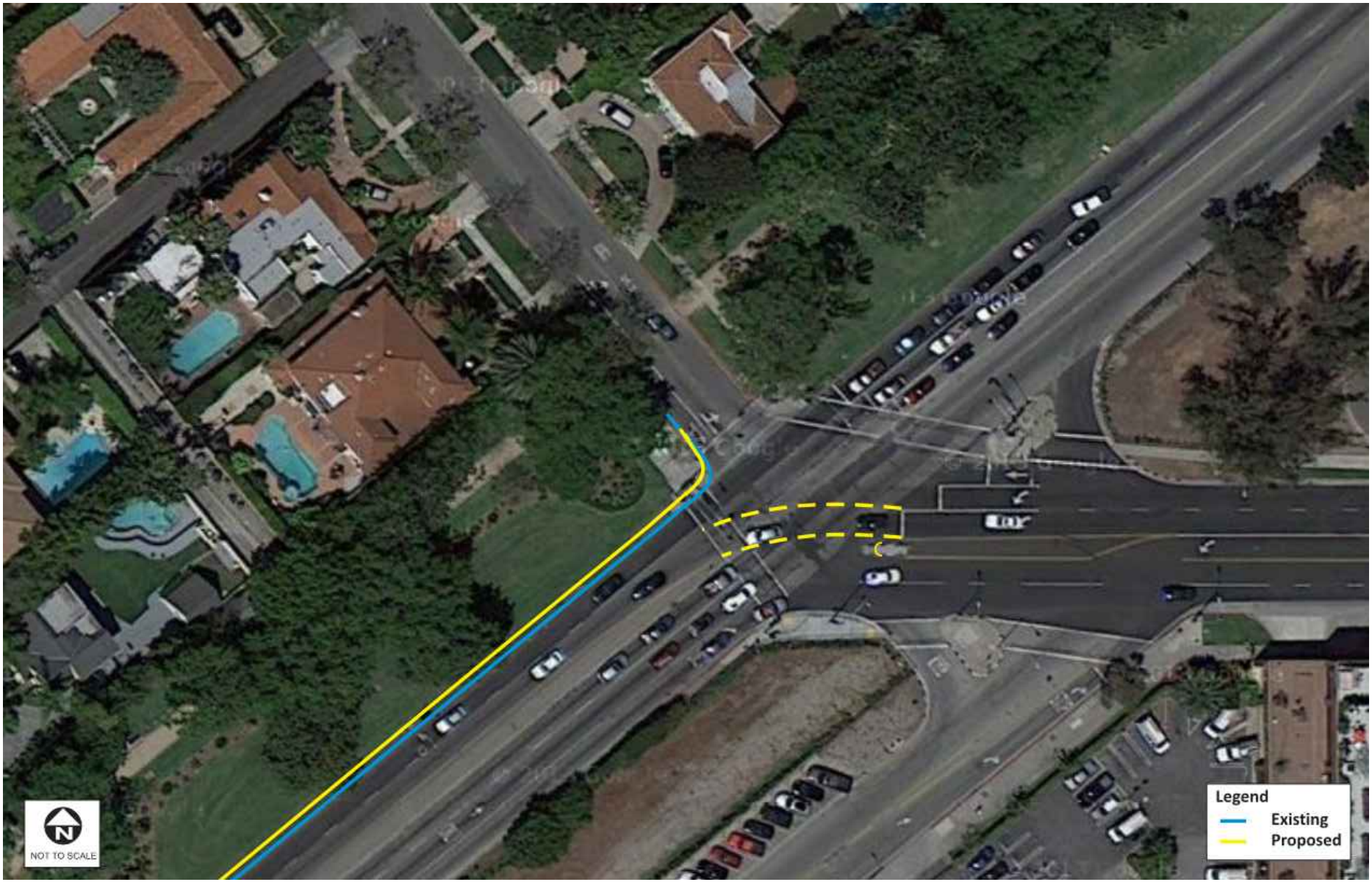

EXHIBIT 4

NORTH SANTA MONICA BLVD. RECONSTRUCTION

BEVERLY BLVD/NORTH SANTA MONICA BLVD INTERSECTION EXHIBIT

PSOMAS

ITERIS

BEVERLY HILLS

W:\1BEV041000\ENGR\EXHIB\NSMB-022_Iteris Exhibit.dwg Fri,17 Jan.2014 - 4:17pm Plotted by: dhewlett

W:\1BEV041000\ENGR\EXHIB\NSMB-024-01_Gruen-Pano-Render-1A.dwg Fri,17 Jan,2014 - 3:28pm Plotted by: dhewlett

PSOMAS

EXHIBIT 5

NORTH SANTA MONICA BLVD.
RECONSTRUCTION

PHOTO RENDERING - (NO MEDIAN) 60' CURB TO CURB WIDTH

BEVERLY HILLS

W:\1BEV041000\ENGR\EXHIB\NSMB-024-06_No-Median_63ft.dwg Fri,17 Jan,2014 - 3:31pm Plotted by: dhewlett

PSOMAS

EXHIBIT 6

NORTH SANTA MONICA BLVD.
RECONSTRUCTION

PHOTO RENDERING - (NO MEDIAN) 63' CURB TO CURB WIDTH

BEVERLY HILLS

W:\1BEV041000\ENGR\EXHIB\NSMB-024-02_Gruen_Median_60ft.dwg Fri,17 Jan,2014 - 3:34pm Plotted by: dhewlett

PSOMAS

EXHIBIT 7

NORTH SANTA MONICA BLVD.
RECONSTRUCTION

PHOTO RENDERING - (VEGETATED MEDIAN) 60' CURB TO CURB WIDTH

BEVERLY HILLS

W:\1BEV041000\ENGR\EXHIB\NSMB-024-07_Median_63ft.dwg Fri,17 Jan,2014 - 3:41pm Plotted by: dhewlett

PSOMAS

EXHIBIT 8

NORTH SANTA MONICA BLVD.
RECONSTRUCTION

PHOTO RENDERING - (VEGETATED MEDIAN) 63' CURB TO CURB WIDTH

BEVERLY HILLS

W:\1BEV041000\ENGR\EXHIB\NSMB-024-03_Gruen-Median-Trees_60-to-66.dwg Fri,17 Jan,2014 - 4:27pm Plotted by: dhewlett

PSOMAS

EXHIBIT 9

NORTH SANTA MONICA BLVD.
RECONSTRUCTION

PHOTO RENDERING - (VEGETATED MEDIAN AND STREET TREES)
INCREASED WIDTH AT EXISTING 60' CURB TO CURB LOCATION

BEVERLY HILLS

EXHIBIT 10

NORTH SANTA MONICA BLVD.
RECONSTRUCTION

PHOTO RENDERING - (VEGETATED MEDIAN AND STREET TREES ARE NOT SHOWN FOR CLARITY)
INCREASED WIDTH AT EXISTING 60' CURB TO CURB LOCATION

PSOMAS

BEVERLY HILLS

W:\1BEV041000\ENGR\EXHIB\NSMB-024-05_Gruen-66ft-No-Median-No-Trees.dwg Fri,17 Jan,2014 - 3:44pm Plotted by: dhewlett

W:\1BEV041000\ENGR\EXHIB\NSMB-024-08_Median_Trees_63-to-66ft.dwg Fri,17 Jan,2014 - 3:50pm Plotted by: dhewlett

PSOMAS

EXHIBIT 11

NORTH SANTA MONICA BLVD.
RECONSTRUCTION

PHOTO RENDERING - (VEGETATED MEDIAN AND STREET TREES)
INCREASED WIDTH AT EXISTING 63' CURB TO CURB LOCATION

BEVERLY HILLS

W:\1BEV041000\ENGR\EXHIB\NSMB-024-04_Gruen-66ft-No-Median.dwg Fri,17 Jan,2014 - 3:51pm Plotted by: dhewlett

PSOMAS

EXHIBIT 12

NORTH SANTA MONICA BLVD.
RECONSTRUCTION

PHOTO RENDERING - (VEGETATED MEDIAN AND STREET TREES ARE NOT SHOWN FOR CLARITY)
INCREASED WIDTH AT EXISTING 63' CURB TO CURB LOCATION

BEVERLY HILLS