APPENDIX D
TECHNICAL SPECIFICATIONS FOR WATER

Specifications D101

Developer – Installed Water Distribution Facilities

As used in these specs, the words defined in the following shall have the meanings herein ascribed:

The engineer : Metro/City of Beverly Hills

Department :Metro/City of Beverly Hills

Los Angeles Department of Water and Power : Metro/City of Beverly Hills

Los Angeles Department of Water and Power Contact : Metro

THIS PAGE INTENTIONALLY LEFT BLANK

Standard Specifications No. DWPWS - D101

Table of Contents

I. General Conditions & Procedures

1.01 Scope ..... Page 1
1.02 Ordinances and Codes 1
1.03 Department of Public Works Requirements 1
1.04 Definitions 2
1.05 Contractor's Qualifications 2
1.06 Start of Construction 3
1.07 Clean-Up 3

II. Pipeline Installation Procedures

2.01 Street Preparation ..... Page 4
2.02 Corrosion Mitigation 4
2.03 Surveying 4
2.04 Inspection 5
2.05 Approval by the Department 6
2.06 Materials Inspection, Handling and Storage 6
2.07 Earthwork and Excavation 8
2.08 Pipe Bedding 10
2.09 Backfill and Compaction 11
2.10 Preparation and Inspection of Pipe Fittings for Installation 12
2.11 Pipe Alignment and Grade 12
2.12 Deviation from Alignment and Grade Occasioned by Other Structures 13
2.13 Installation of Fittings 13
2.14 Installation of Joint-Restraint Fittings 14
2.15 Thrust Blocks 15
2.16 Installation of Valves and Standpipes 16
2.17 Fire Hydrants 16
2.18 Service Laterals and Meters 17
2.19 Service Taps 18
2.20 Hydrostatic Testing 19
2.21 Testing 20
2.22 Disinfection 21
2.23 Acceptance and Release for Wet Taps 21
2.24 Connections to the Department's System 21
2.25 Temporary Resurfacing 22

Standard Specifications No. DWPWS - D101

Table of Contents

Continued.

2.26 Permanent Surfacing ..... Page 22
2.27 As-Constructed Data 23
2.28 Protective Concrete Slabs over Pipes 23
2.29 Criteria for the Separation of Water Mains and Sanitary Sewers 23
2.30 Concrete Structures 24
2.31 Reinforcing Steel for Concrete Structures 26

III. Special Conditions for Ductile Iron

3.01 Special Conditions - Ductile Iron Pipe and Appurtenances ..... Page 28

IV. Special Conditions for Steel Pipe

4.01 Special Conditions - Steel Pipe and Appurtenances ..... Page 31
4.02 Miscellaneous Metalwork and Piping 33

Appendix 1 - Material Specifications
Appendix 2 - Drawings

DEPARTMENT OF WATER AND POWER
CITY OF LOS ANGELES

Developer-Installed
Water Distribution Facilities

Standard Specification No. DWPWS - D101
Revision Number 1

I. General Conditions and Procedures

1.01 SCOPE: This specification is for construction of an intact Developer-Installed Water Distribution System as shown on the project drawings. Connections to the existing pipelines will be made by the Developer, and setting of the water meters will be made by the Department of Water and Power (Department), unless indicated otherwise on the project drawings.

1.02 ORDINANCES AND CODES: In addition to the requirements of these specifications, the Developer shall comply with all laws, ordinances, rules, regulations and codes relating to the work, use of premises and highways, and safety of persons and property. The Department shall reserve the right to request a determination by appropriate authorities to resolve the problem of a potentially hazardous site condition. The Developer shall stop all work related to the area in question until the appropriate agency has resolved the problem. Any work performed and materials or equipment furnished that does not conform to said laws, ordinances, rules, regulations and codes shall be changed to conform thereto by the Developer at his/her sole expense.

All work performed shall be in accordance with the requirements of all permits applicable to the project.

1.03 DEPARTMENT OF PUBLIC WORKS REQUIREMENTS: In addition to the requirements of these specifications, all work shall be in accordance with the latest revision of the Standard Specifications for Public Works Construction (SSPWC), Section 7-9, Section 203, Section 300 - Section 302, and Section 306, all as modified by the City of Los Angeles Bureau of Engineering Standard Plan S-610-18, or latest revision. The Contractor shall also comply with the provisions of the Work Area Traffic Control Handbook (WATCH), and with the permit requirements of the City Engineer of the City of Los Angeles.

1.04 DEFINITIONS:

A. Department - The Los Angeles Department of Water and Power. The plant, facilities, system assets, and personnel controlled by the Board pursuant to its Charter authority.

B. Developer - Any person, association, corporation, entity, or government agency desiring water service for premises under their control which the Department is obligated to serve; often a subdivider.

C. Contractor - In the context of these Specifications, a contractor employed by the Developer to install water distribution facilities.

D. Engineering Standards Manual (ESM) - The manual of Standards, including Standard Drawings, to which the Developer and Contractor must comply when performing work on water distribution facilities.

E. Engineer - The Engineer in Charge of the Water Operating Division (or his or her authorized representative).

F. Inspector - The authorized representative of the Engineer assigned to the jobsite.

1.05 CONTRACTOR'S QUALIFICATIONS: Contractors performing all work for water distribution facilities shall be competent, licensed firms with adequate manpower and equipment to accomplish the work in accordance with the approved plans and specifications. A representative of the Developer or the Contractor shall be present at the jobsite whenever work is being conducted by sub-contractors.

Contractors and Applicants shall meet the following requirements with regard to qualification, and guarantees:

A. Qualification: Contractors desiring to install water distribution facilities for the Department on behalf of a Developer shall be prequalified. "Request for Contractor Prequalification" forms (see Sheet 1 of Appendix 2) may be obtained from, and returned to the Department at least thirty (30) days prior to the date the Contractor anticipates beginning installation of the distribution facilities. Following evaluation of the completed form, written notice of acceptance or denial will be transmitted to the Contractor. Prequalification is subject to yearly application and renewal. The Contractor shall be specifically prequalified by the Department for the installation of sixteen-inch (16") and larger pipe.

B. Guarantee of Workmanship, Materials, and Equipment: The Developer shall guarantee that the distribution facilities installation by the Contractor (or Developer) be free from any and all liens and encumbrances and free from any and all defects in materials and workmanship for a period of one year after final acceptance by the Department. This guarantee shall be in the form of an irrevocable Letter of Credit for an amount determined by the Department, beginning at the date of final acceptance of the distribution facilities by the Department. The Department will make any necessary repairs and charge the Letter of Credit.

1.06 START OF CONSTRUCTION: In addition to all construction requirements contained in other portions of these Specifications, the Developer and Contractor shall observe the following:

A. Construction shall commence within six (6) months of the approval date shown on the plans, or the plans shall be resubmitted for review and approval. If construction on the main installation is halted for more than six (6) months, plans shall be resubmitted for review and approval.

B. The Contractor shall contact the appropriate Water Services Representative at the telephone number shown on the approved plans under "Notice to Contractors" to arrange a preconstruction meeting with the Professional Engineer who designed the project drawings, Department personnel, and the Developer at least two (2) weeks after approval of construction plans and at least two (2) weeks prior to initiating any distribution system construction. The purpose of the meeting shall be to discuss the construction project, scheduling, procurement of materials, and to define responsibilities for the personnel involved in the project. The Contractor will receive a "Field Notes" print and "Field Notes and As-Constructed Drawings" Manual. The Contractor shall give at least 3 working days' notice to the Department prior to commencing construction by calling the Inspection Engineer at (213) 367-3560.

In case of an emergency during non-working hours, the Department's customer telephone service, (800) 499-4611 shall be notified.

1.07 CLEANUP: Upon completion of the water distribution facilities installation, all rubbish, unused materials, concrete forms and other like material shall be removed from the jobsite. All excess excavation material shall be disposed of properly and the area shall be left in a state of order and cleanliness.

II. Pipeline Installation Procedures

2.01 STREET PREPARATION: Prior to installation of water mains, curbs and gutters shall be in place and road construction shall have progressed to within fifteen inches (15") of the finished street grade. The road surface shall be smooth, clear of debris, and free from deep holes, ruts and large rocks which may hamper main installation.

2.02 CORROSION MITIGATION: For all main extensions, the Developer shall provide to the Department after the curbs and gutters have been installed, a soil resistivity survey of the main installation area performed by a Corrosion Specialist certified by the National Association of Corrosion Engineers, or a Corrosion Engineer registered by the State of California. The soil resistivity readings shall be taken at each intersection, cul-de-sac, 500-foot intervals, and both sides of obvious cut and fill areas.

2.03 SURVEYING: Line and grade for Distribution Mains in the absence of curbs and gutters will be established by the Department at the Developer's expense. As-constructed survey will also be done by the Department at the Developer's expense. When specifically approved by the Department, a Professional Engineer or a Land Surveyor licensed to practice in the State of California or his or her authorized representative may perform the surveys. All work shall be done in a professional manner.

When surveying is performed by a party other than the Department, the correct alignment and elevation of the water mains as shown on the approved drawings becomes the responsibility of the Developer and Contractor. Approval of the staked alignment and elevations by the Department's Inspector does not relieve the Developer and Contractor in any manner from the responsibility for field errors. Sufficient line and grade shall be staked to ensure continual work progress.

When surveying is required, hubs and stakes shall be set on an offset line to mark the location of the centerline of the main. Centerline hubs and stakes may be used in addition to the offset hubs and stakes; however, they may not be set in place of the offset hubs and stakes. Normal practice is to set offset hubs and stakes five feet (5') to ten feet (10') off the centerline of the main.

Survey points shall be set at a maximum distance of one hundred feet (100') apart. All valves, crosses, tees, horizontal and vertical bends, and fire hydrants shall be staked for location and grade. Points of curvature and points of tangency of curves, as well as points on the curve, shall be staked for location and grade. All stakes shall be flagged to increase their visibility.

Stakes shall be positioned so that the survey hub is between the stake and the main. The side of the stake facing the main shall be marked to show the point being referenced and the distance from the hub to the centerline of the main. The back side of the stake shall be stationed. Grade stakes shall be set at each hub and shall state the vertical distance from the top of the hub to the top of the pipe. The cover on pipes smaller than twelve inches (12") in diameter shall be not less than thirty inches (30") nor more than forty-two inches (42"); and on pipe twelve inches (12") or larger in diameter, the cover shall be not less than thirty-six inches (36") nor more than forty-eight inches (48") unless shown otherwise in the project drawings. Cover shall be measured to nearest gutter flow line grade.

The Developer and the Contractor shall take reasonable steps to prevent alteration, displacement or removal of hubs and stakes.

2.04 INSPECTION: Installation of all new facilities will be inspected and approved by the Department.

The Department will ensure compliance with the provisions of the approved plans and specifications, especially with regard to the quality of workmanship and materials. Problems which may require sound field judgment, in lieu of strict interpretation of the specifications, shall be resolved by the Department and the Contractor, and any resulting monetary differences shall be resolved between the Contractor and the Developer.

All work shall be performed in accordance with accepted workmanship practices and these Specifications. Any work not accepted by the Department shall be redone until compliance with these Specifications is achieved.

All appropriate permits shall be on the jobsite and shall be checked by the Inspector before starting construction.

The Contractor shall promptly comply with orders relating to quality of materials and workmanship given by the Department.

No materials shall be used prior to inspection and approval by the Inspector. The Department has the right to perform any testing deemed necessary to ensure compliance of the materials with the Materials Specifications. Failure or neglect on the part of the Department to condemn or reject work or materials not in accordance with the Materials Specifications shall not be construed to imply their acceptance should their inferiority become evident at any time. Materials rejected by the Department shall be immediately removed from the jobsite.

2.05 APPROVAL BY THE DEPARTMENT: Throughout these Specifications, many handling and installation procedures, tools, equipment, and materials require approval by the Department. Approval by the Department is used solely as a means to ensure quality control and safety, and in no manner shall it render the Department liable for any injuries suffered or equipment damaged. Safety of workers shall be provided as required by the California Occupational Safety and Health Administration (Cal-OSHA).

2.06 MATERIALS INSPECTION, HANDLING AND STORAGE: All materials needed to complete the work shall be available at the start of construction so that the project may proceed without delay.

A. Inspection, handling and storage of materials shall be in accordance with the following American Water Works Association (AWWA) Standards and Manuals for installation of water mains and their appurtenances, as last revised:

	Standard	Manual
Ductile Iron:	AWWA C600	
Steel:	DWP W293	M11

B. Materials shall be delivered free of damage at the site of installation. The Department shall have the right to inspect all materials delivered to the site and reject any damaged material or material not complying with these specifications.

Pipe and fittings shall be loaded and unloaded by lifting so as to avoid shock or damage. Under no circumstances shall such material be dropped. If, however, any part of the coating or lining is damaged, the replacement or repair of the damaged pipe shall be done to the satisfaction of the Department. Any pipe or fittings that are not acceptable to the Department shall be removed from the jobsite immediately. All pipe handling equipment and pipe handling methods shall be approved by the Department.

C. The Developer shall furnish materials of the size and type shown on the project drawings and further described in this Specification. All materials shall be new and unused and clearly marked to allow field identification during installation for compliance with these Specifications. Everything necessary to complete all installations in accordance with the Standards of the Department shall be furnished and installed whether shown on approved drawings or not. All installations shall be completed as fully operable functioning parts of the Department's Water System.

D. Detailed technical specifications (or a reference to industry specifications) for purchase or approval of materials are included in the Materials Specifications Section of these Specifications (see Appendix 1). This list describes the waterworks materials, reference specifications, and which materials are available only from Water System Stores. The Developer or his/her Contractor should be aware that certain items must be ordered from waterworks suppliers well in advance of the start of construction. Steel pipe not purchased from the Department is subject to inspection and testing in accordance with DWP Specification W-302, at the Developer's expense. The Department shall be notified at least four (4) weeks prior to start of manufacturing. Lack of proper coordination between the Developer and the waterworks supplier will not be accepted as a reason to purchase materials from the Water System Stores.

E. The Department reserves the right of approval for all materials installed in, or connected to, the Water Distribution system. The Developer shall submit to the Department a proposed list of materials to be used, including a complete description of the brand name, catalog number, and any other designating information to allow the Department to determine compliance with these Specifications. Acceptance of materials, or the waiving of inspection thereof, shall in no way relieve the Developer of the responsibility for furnishing materials meeting the requirements of Materials Specifications. New water industry products or materials will be tested by the Department if the Engineer feels the product or material has some merit. The Department will establish the criteria for testing and evaluating the product. Adequate lead time shall be allowed for testing of previously unapproved materials as to not delay the project. The Department reserves the right to accept or reject any product or material regardless of the test results.

F. The Developer may procure from Water System Stores materials that are not available from waterworks suppliers. The procurement of materials from the Department's Stores shall be done in accordance with conditions in the agreement between the Department and the Developer. For procurement of materials through the Department's Stores, the Developer shall consider at least the following items:

1. Purchase Price - To be based on the Department's purchase price plus handling, warehousing and applicable taxes.

2. Delivery Location - All materials to be supplied F. O. B. Department's yard.

3. Ordering / Pickup - All materials shall be paid for in full at the time of ordering. The Department will supply the material to the Developer as soon as possible following receipt of the material from its material contractors. The Department will not guarantee warehousing of all items. The Developer will arrange for pickup of materials a minimum of 48 hours prior to pickup.

4. Coordination - Detailed coordination for pickup of materials shall be developed at the preconstruction meeting.

5. Preconstruction Plans - The Developer shall prepare a project schedule identifying dates on which key construction activities will be initiated and completed. These plans shall be submitted to the Department for review. A meeting shall be scheduled with the Department by the Developer and his/her Contractor at least 10 working days prior to initiating any distribution system construction to provide for coordination between the Department and the Developer, and to discuss items such as the project schedule, material and construction standards, material procurement, inspection, and other related items.

2.07 EARTHWORK AND EXCAVATION: Earthwork shall be defined to include all clearing, grubbing, grading, excavation, fill, backfill, excess excavation, bedding material, borrow material, and surface restoration as may be required to complete the work.

A. The location of the proposed installation has been based on the best available data as furnished by the City Engineer. The Department shall not be held liable for inaccurate records, and it shall be the Developer's responsibility to verify the location and extent of all existing substructures prior to starting the project. All underground utilities and structures that may interfere with construction shall be located and the location verified sufficiently in advance to permit necessary relocations without delays.

B. All excavations shall be made to lines and grades established by the approved drawings, with the exception that the Department's Inspector has the authority to change the plan and profile to meet unforeseen field conditions. Pipe trenches shall be excavated to a minimum depth of six inches (6") below the bottom of the pipe. Deviation from grades will be allowed when approved by the Department, in accordance with Sections 2.11 and 2.12 of these Specifications. When the cover is not specified, or a profile is not provided, the cover on pipes smaller than 12-inches in diameter shall be not less than 30 inches nor more than 42 inches; and on pipes 12-inches or larger in diameter, the cover shall be not less than 36 inches nor more than 48 inches from the final grade. Cover shall be measured to gutter flow line grade.

The bottom portion of the trench shall be excavated, trimmed, graded and cleaned, and shall be free from stones and irregularities. The bottom of the trench excavation shall be graded so that the joining ends of the pipe will be centered.

Bell holes shall be provided at the joints where necessary and shall be of the size that will enable installation of the joints.

C. For 12-inch and smaller diameter pipe, the trench shall be excavated to a minimum width of eighteen inches (18") or a minimum of six inches (6") on each side of the pipe, whichever is greater, for proper placement and densification of the bedding and backfill material. For 16-inch and larger diameter pipe, the trench must be a minimum of twelve inches (12") on each side of the pipe.

All existing asphalt or concrete surfacing shall be saw-cut vertically in a straight line that is slightly wider on each side than the trench excavation to prevent raveling of the remaining pavement during excavation and construction. Removed asphalt or concrete surfacing material in its existing form shall not be used in any fill or backfill.

D. The Contractor shall comply with Section 6500 of the Labor Code of the State of California by preparing a detailed plan for the excavation of all trenches five feet (5') or more in depth showing the design of shoring, bracing and sloping, or other provisions to be made for worker protection from the hazard of caving ground during the excavation of such trenches. A copy of this plan shall be submitted to the Department, for information only, in advance of construction. If such plan varies from the shoring system standards established by the Construction Safety Order of the Division of Industrial Safety, the plan shall be prepared by a Civil or Structural Engineer registered by the State of California. The Inspector will confirm that a Registered Engineer has prepared the plan.

All excavations shall be shored in accordance with the California Department of Industrial Relations Construction Safety Orders, Article 6, Paragraph 1541, Trenches, Section e, "Trench Shoring Systems", and all other related Sections.

E. All utility lines and appurtenances exposed by the excavation shall be protected and supported, if necessary, in accordance with the existing requirements of the agency concerned.

F. All surplus excavation material shall be removed from the jobsite and disposed of properly. If the surplus excavation is disposed of on private property, written permission shall be obtained from the owner and a copy given to the Department.

G. Except as otherwise dictated by construction conditions, the excavation shall be of such dimensions as to allow for the proper installation and removal of concrete forms, or precast slabs and panels, and to permit the construction of the necessary pipe connections. Care shall be taken to ensure that the excavation does not extend below established grades. If the excavation is made below such grades, the resulting excess excavation shall be filled in with sand or graded gravel, deposited in horizontal layers not more than six inches (6") in thickness after being compacted, and shall be moistened to within two percent (2%) of the optimum moisture content required for compaction of that soil. After being conditioned to have the required moisture content, the layers shall be compacted in accordance with Section 2.09(B) of these Specifications.

H. In general, blasting will be allowed in order to expedite the work only if a permit by the local authority having jurisdiction is granted. All explosives and appurtenances shall be transported, handled, stored, and used in accordance with the laws of the local, state, and federal governments as applicable.

I. All pipe trenches or structure excavation shall be kept free from water during pipe installation and other related work. The method of dewatering shall provide for a completely dry foundation at the final lines and grades of the excavation. No water shall be drained into other work being completed or under construction.

The dewatering operation shall continue until such time as it is safe to allow the water table to rise in the excavations. Pipe trenches shall contain enough backfill to prevent pipe flotation. When pipe is laid in a casing or tunnel longer than thirty (30) pipe diameters, the pipe inside the casing or tunnel shall be secured so flotation does not occur when the pipe is empty.

Water shall not be allowed to rise in the excavation until the concrete has set a minimum of twenty-four (24) hours, and the forms have been removed. Water shall not be allowed to rise unequally against unsupported structural walls.

J. If the bottom of the excavation is soft or unstable and, in the opinion of the Department, cannot satisfactorily support the pipe or structure, a further depth and width shall be excavated and refilled to six inches (6") below grade with bedding material suitably densified to provide a firm foundation for the pipe or structure.

2.08 PIPE BEDDING

A. Installation of Bedding and Pipe: After completion of the trench excavation and proper preparation of the foundation, pipe shall be laid a minimum of six inches (6") above trench bottom on sand bags adjacent to pipe bells before placement of bedding material. As an alternative, a minimum of six inches (6") of sand bedding

material may be placed on the trench bottom for support under the pipe with bell holes dug deep enough to provide a minimum of two inches (2") of clearance between the bell and bedding material. All pipe shall be installed in such a manner as to ensure full support of the pipe barrel over its entire length. Bedding material shall be placed to such a height that after consolidation, it will support, surround and cover the pipe to a depth of not less than twelve inches (12"). See Sheet 2 of Appendix 2.

The minimum limits of bedding shall be from six inches (6") below the bottom of the pipe to twelve inches (12") above the top of the pipe. Approved backfill may then be installed to the ground line. See Section 2.09 of these Specifications for backfill and compaction of backfill.

Sand shall be water densified prior to backfilling by flooding when installing ductile iron pipe, and by flooding or jetting when installing steel pipe.

B. Bedding Material: The bedding material shall be 3/4 sack sand-cement slurry, or clean, well-graded, washed, concrete sand with an electrical resistivity of not less than 10,000 ohm per cubic centimeter and shall conform to Subsection 200-1.5.3 of the Standard Specifications for Public Works Construction, as last revised. When slurry is used, the pipeline shall be laid on sandbags to ensure a minimum of six inches of slurry under and around the pipe. The Department reserves the right to specify the type of bedding material to be used at any time.

2.09 BACKFILL AND COMPACTION

A. Pipes: Backfill shall be the fill placed above the bedding. All backfill, except that within State Highways, shall be placed as specified in Subsection 306-1.3.2 or 306-1.3.3, and compaction requirements shall be in accordance with Subsection 306-1.3.4 of the Standard Specifications for Public Works Construction. Backfill within State Highways shall be in accordance with Caltrans' latest specifications and permit for the project.

Excavations performed under permit by the City of Los Angeles within the roadway portion of all paved streets and alleys shall be backfilled with 3/4 sack sand-cement slurry, unless otherwise permitted by the City Engineer. The mixture of slurry and backfill shall be controlled to prevent pipe floatation. Sand-cement slurry shall contain 3/4 of a sack of Portland cement to one cubic yard of washed concrete sand with sufficient water to facilitate placement. The backfill material on unpaved streets shall be suitable native soil, suitable sand, or sand-cement slurry. Suitable native soil shall consist of material free of organics, rubbish, debris, and other objectionables.

Backfilling shall be kept as close to the pipe laying operation as possible. Backfilling shall be conducted at all times in a manner to prevent damage to the pipe and its coating, and to prevent mixing of bedding and backfill material.

B. Structures: Backfill for structures shall be from the subgrade of the structure to ground level on dirt surfaces or bottom of base layer on paved surfaces. Compaction, material, and other requirements shall be the same as backfill for pipes.

2.10 PREPARATION AND INSPECTION OF PIPE AND FITTINGS FOR INSTALLATION: Before placing pipe in the trench, each pipe length or fitting shall be thoroughly cleaned of all foreign material, kept clean thereafter, and carefully examined for cracks and other defects before installation. Bell ends and spigot ends are to be examined with particular care.

Joint lubricant shall be as supplied by the pipe manufacturer and approved by the Department. Joint lubricant shall be nontoxic and water soluble.

Pipe shall be cut, whenever necessary, to conform to location of fittings, line or grade. All cuts shall be straight and true, and made in a workmanlike manner so as to leave a smooth end without damaging the pipe. The cut ends of pipe shall have all burrs removed and be lightly rasped or filed. All tools used in cutting pipe shall be approved by the Inspector.

FOR ASBESTOS-CEMENT PIPE:

POWER-DRIVEN SAWS WITH ABRASIVE DISCS (MASONRY BLADES) SHALL NOT BE USED FOR DRY CUTTING OR BEVELING ASBESTOS-CEMENT PIPE. This is in recognition of efforts to reduce the incidence and corresponding danger of airborne pipe fragments wherever cutting is necessary.

2.11 PIPE ALIGNMENT AND GRADE: In laying pipe, the intent is to lay and set line and grade within a tolerance of three inches (3") plus or minus. On relatively level ground, the intent is to lay to grade. Fittings, valves and hydrants shall be installed at specified locations and elevations.

When laying pipe on curves, the intent is to lay to the alignment. The pipe shall be kept in alignment by placing all the joints on the curve. When laying ductile iron pipe, short lengths of pipe or eleven and one quarter (11-1/4) degree bends shall be used as necessary to accomplish the curvature without exceeding individual joint deflections specified by the pipe manufacturer. When laying steel pipe, specified alignment may be accomplished by pulling joints, trimming spigots, using elbows, and using short lengths of pipe in accordance with the project drawings.

The cover on pipes smaller than twelve inches (12") in diameter shall be not less than thirty inches (30") nor more than forty-two inches (42"); and on pipe twelve inches (12") or larger in diameter, the cover shall be not less than thirty-six inches (36") nor more than forty-eight inches (48"). Cover shall be measured to nearest final gutter flow line grade. If difficulties arise when crossing substructures, deviations from cover limits will be permitted in accordance with the project drawings.

Any changes in alignment and grade shall be authorized by the Department and shall be accomplished by the installation of additional fittings. Pulling of joints is permitted only when installing pipe where the finished surface has horizontal or vertical curves.

Pipes with bell and spigot rubber gasket joints shall be laid with bell ends facing the direction of laying, unless directed otherwise by the Inspector.

Whenever the installed pipe is left unattended, temporary plugs shall be installed at all openings. Temporary plugs shall be watertight and designed to prevent children and animals from entering the pipe. All temporary plugs shall be approved by the Department.

2.12 DEVIATION FROM ALIGNMENT AND GRADE OCCASIONED BY OTHER STRUCTURES: Whenever obstructions not shown on the plans interfere to such an extent that an alteration in the plans is required, the Department shall have the authority to determine the best method of correction. See Sheet 3 of Appendix 2. The Department will request the plans to be modified and order a deviation from line and grade. Arrangements may be made with the owners of the structure for its removal, relocation, or reconstruction. If the extent of the plan modifications require a revised permit, the modified plans shall be submitted to the Department for approval.

2.13 INSTALLATION OF FITTINGS: All fittings shall be in compliance with the Materials Specifications in Appendix 1. Acceptable joint types for straight lengths of ductile iron and steel pipe are push-on joints and slip-joint welding, respectively. Mechanical joints for straight lengths of pipe will be allowed only when specifically approved by the Department. Fittings shall be set and joined in the manner described in Sections 3.01 and 4.01 of these Specifications. The use of "wyes" in main installations is strictly prohibited.

Lead joints may be required when installing special fittings. Flange joints are required when installing four-inch (4") and larger line valves in steel pipe, four-inch (4") and larger tapping sleeves, and other fittings. No other type of joint shall be used without the specific approval of the Department.

Flanges and flanged fittings shall have a rating that meets the maximum static pressure at the location of installation. Care should be exercised to select flanges and flanged fittings that have matching drilling templates. As a rule of thumb, flanges and flanged fittings having a 200 psi or smaller rating or class, match. Also, flanges and flanged fittings having a 250 psi or greater rating or class, match. After the flange has been welded, there shall be no draft or layback of the flange face.

Mechanical couplings shall be of a gasketed, sleeve type, with diameter to properly fit the pipe. Tolerance on pipe and coupling, together with proper bolt and gasket arrangements, shall be sufficient to ensure permanent watertight joints under all conditions. Where pipes of different outside diameter are connected together, or where pipe is connected to fittings of different materials, care shall be exercised to select the proper ring or adapter.

Repair clamps, repair sleeves, joint clamps, and similar devices shall not be used to repair or join water mains. Pipe damaged during installation shall be removed and replaced.

Adapters, plugs, end caps, bulkheads, slip sleeves, anchor boxes, lock-joint gaskets, yokes and rods, and other appurtenances shall be used where appropriate throughout the system, subject to the approval of the Department. The Department does not intend to unreasonably limit the installation of any type of fitting, joint, or proprietary device; however, the installation of any such fitting not specifically approved by these Specifications, is subject to the approval of the Department. Written request for approval of deviating items shall be made in advance through the Department.

All fittings installed in ductile iron main extensions shall be wrapped with polyethylene encasement material as instructed on Sheet 5 of Appendix 2. All fittings installed in steel main extensions shall be coated in accordance with Section 4.01(B)3.

2.14 INSTALLATION OF JOINT-RESTRAINT FITTINGS: Ductile iron fittings subjected to unbalanced hydrostatic forces and the adjacent sixty (60) linear feet of pipe shall be restrained with lock-joint gaskets (U.S. Pipe "Field Lok" or equivalent) or yokes and rods. For horizontal 11-1/4 degree bends, ten (10) linear feet shall be restrained with lock-joint gaskets or yokes and rods. Any other method used for restraining joints must be approved by the Department.

Steel pipe shall be restrained throughout the entire length. Noninsulating mechanical couplings shall be fitted with anchor boxes in accordance with Sheet 8 of Appendix 2 and shall be electrically bonded in accordance with Sheet 13C of Appendix 2.

Lock-joint gaskets or yokes and rods shall be installed for the entire length of ductile iron fire hydrant, fire service, and domestic service laterals.

2.15 THRUST BLOCKS: Concrete thrust blocks shall be provided for all bends and fittings subjected to an unbalanced hydrostatic force. Concrete thrust blocks shall be sized for the test pressure of the main and the allowable soil bearing capacity. The test pressure is generally one and one-half times the maximum static pressure. For design purposes, a minimum of two hundred (200) psi shall be used for all main installations. Standard sizes and shapes of thrust blocks based on two hundred (200) psi water pressure and various types of soil are shown on Sheet 6 of Appendix 2.

The thrust blocks shall be two thousand (2000) psi or greater compressive strength concrete conforming to the Materials Specifications.

A. Installation: Care shall be taken not to block outlets or to cover bolts, nuts, clamps, or other fittings, or to make them inaccessible. Ductile iron pipe shall be polyethylene encased prior to installing thrust blocks. If a large thrust block is to be poured, it shall be separated into sections by a suitable material. If, in the opinion of the Department, the soil-bearing capacity is not sufficient to provide adequate restraint based on minimum bearing areas as shown on the Sheet 6 of Appendix 2, then the minimum bearing area shall be increased to a size that will ensure adequate restraint. In every instance, the thrust block shall bear against undisturbed soil.

Before placing concrete, all equipment for mixing and transporting the concrete shall be clean. All debris or water shall be removed from the place to be occupied by the concrete. Concrete shall be placed only in the presence of the Inspector unless inspection has been waived prior to the placement.

B. Form Work: All forming for concrete thrust blocks shall be done by bulkheading around the shape of the thrust block with wood, burlap, or reinforced paper sacks filled with sand. Sacks shall be of a size easily handled when full, and shall be removed before backfilling.

If the main must be placed into service immediately, wood may be used to form up thrust blocks. Wood forms shall be of such design as to support the thrust until the concrete has set and shall not be considered a substitute for the concrete thrust block.

No horizontal struts or braces required for trench shoring shall remain in the concrete thrust blocks. Prior to placing concrete, the forms and trench wall shall be inspected and approved by the Inspector.

When concrete is deposited against the ground without the use of forms, the ground shall be thoroughly moistened or other provisions made to prevent the ground from absorbing water from the concrete.

C. Minimum Curing Time: Newly placed concrete shall be allowed to set undisturbed for a minimum of twenty-four (24) hours.

D. Compaction of Fill Over Thrust Blocks: Backfill may be placed over thrust blocks after the surface has set sufficiently to resist the weight of the backfill. However, no tamping or compacting shall be allowed above the thrust block for a minimum of twenty-four (24) hours after placement.

2.16 INSTALLATION OF VALVES AND STANDPIPES: Valves shall be located as shown on the project drawings. Any deviations from this shall be at the sole discretion of the Department.

Gate valves must be purchased from Water System Stores in accordance with Section 2.06(F).

Valves shall be handled in a manner which prevents injury or damage. Valves shall be operated prior to installation to ensure good operating condition. Valves shall be set with the valve stems plumb and be joined to the pipe in the manner previously specified for cleaning, laying, and joining flanged and push-on joints. Valves installed in ductile iron main installations shall be wrapped with polyethylene encasement material as instructed in Section 2.13 of these Specifications. Valves installed on steel main extensions shall be coated in accordance with Section 4.01(B)3.

A valve standpipe and gate cap shall be provided for every valve not installed above ground or in a vault. Twelve-inch (12") and smaller line valves shall be provided with a six-inch (6") cast iron gate cap, steel split sleeve, and steel standpipe. Eight-inch (8") and twelve-inch (12") gate valves also require a steel standpipe bottom. Gate valve caps, split sleeves, standpipe bottoms, and standpipes shall be obtained from the Department. The standpipe shall be electrically isolated from the valve, shall not bear, transmit shock or external loads to the valve, and shall be centered and plumb over the wrench nut of the valve, with the gate cap set to finished grade or an elevation determined by the Department. See Sheet 7 of Appendix 2.

2.17 FIRE HYDRANTS: All hydrants shall be field staked for location and grade. Final location shall be in accordance with project drawings and Sheets 14 through 19 of Appendix 2. Fire hydrants shall be set so that the elevation of the bottom of the top section flange or the center of the threaded coupling is set at the finish grade of the ground or top of the curb. All hydrants shall stand plumb.

Fire hydrant installations shall have all joints within the lateral restrained. Push-on joints, cast mechanical couplings, and steel mechanical couplings shall be fitted with lock-joint gaskets, yokes and rods, and anchor box assemblies, respectively. Ductile iron fire hydrant installations shall have the lateral, bury ell and mid-section encased in polyethylene material in accordance with Section 2.13 and 3.01(B)5 and Sheet 5 of Appendix 2..

All steel mains shall have fire hydrant laterals of steel only. Ductile iron mains can have fire hydrant laterals of either ductile iron or steel.

2.18 SERVICE LATERALS AND METERS: Water is conveyed from mains to the plumbing of customer's premises by service laterals. In the context of these Specifications, service laterals include all pipe, fittings, valves, and appurtenances up to and including the meter. All water pipe beyond the meter is controlled by the Los Angeles City Plumbing Code.

Applications for service shall be received and approved by the Department before tapping the main. Meters less than three inches in size shall be set by the Department except when specifically approved by the Department. Service installation orders will be prepared by the Inspector unless the Department directs the Developer to do so. The Developer shall cooperate with the Inspector in compiling as-constructed service data. All services shall be flushed with water after the laterals are installed.

Services shall be installed as shown on the project drawings. Small services (3-inches and smaller) shall be installed in accordance with Sheets 20 through 30 of Appendix 2.

Service laterals shall not be installed within a three-foot (3') horizontal distance of other utilities.
Cover from top of service lateral to nearest gutter grade shall be a minimum of two feet (2') for two-inch (2") and smaller service laterals, a minimum of two and one-half feet (2-1/2') for four-inch (4") to eight-inch (8") service laterals, and three feet (3') for twelve-inch (12") service laterals. The service lateral shall be installed at lower depths if the Department determines that the installation at normal depth is not desirable.

Four-inch (4") and larger gate valves used with steel or ductile iron service pipe within the service vault shall be flanged gate valves with cast iron bodies conforming to the Materials Specifications. All eight-inch (8") and larger gate valves installed in a vault or aboveground shall be supported by concrete stands or grout-filled concrete blocks.

Unless installed in a vault or aboveground, all gate valves shall be equipped with a cast iron vertical gate cap, steel split sleeve, and steel standpipe, and, if appropriate, a steel standpipe bottom. See Section 2.16.

All joints in four-inch (4") and larger service laterals shall be firmly anchored to each other.

The main to be tapped shall extend along the front lot line of the property to be served. In the case of corner lots, the property may be served from the side lot line. If service is requested for lots at the end of a cul-de-sac, the main to be tapped shall not be more than fifty feet (50') from any property line in the cul-de-sac.

2.19 SERVICE TAPS

A. On Existing Water Mains: Service taps (connections) on existing mains are generally made by the Department while the main is in service. The Contractor may be required to install four-inch (4") and larger services by connecting to the valve provided by the Department. In specific instances, the Department may allow service taps to be made by an approved contractor.

B. On New Water Mains: Service taps on new mains installed by contract are made by the Contractor. Service connections shall be wet-tapped. Wet-tap connections shall be made after testing and disinfection of the main installation. Refer to Section 2.23 for other conditions which must be met prior to wet-tapping.

C. Tapping Sleeves and Tees: Tapping sleeves and tees shall conform to the Materials Specifications in Appendix 1. Tapping sleeves or clamps are used to tap existing mains that are in service and under pressure without interrupting service. They are also used to tap new mains. Care shall be exercised to select sleeves and gaskets which are properly sized to fit the type and class of pipe to be tapped. Where four-inch (4") and larger tees and tapping sleeves are used, a thrust block shall be formed and poured behind the sleeve or tee to prevent possible damage to the main from pressure shocks which develop as valves are first opened.

D. Tapping: Adjacent taps shall be spaced a minimum of two feet (2'). In tapping water mains, it may be necessary to dig out bedding material and to cut or remove part of the polyethylene wrapping in ductile iron pipe and to remove part of the enamel undercoating and cement coating in steel pipe. When tapping steel pipe, the reinforcing wire in the cement mortar coating must not come in contact with the pipe or the corporation valve. After the taps are made, the polyethylene wrap in ductile iron pipe shall be repaired or replaced in accordance with Sheet 5 of Appendix 2 and the steel pipe recoated with coal-tar enamel and cement that conform to the Materials Specifications. Any bedding material removed during excavation shall be replaced in kind and compacted in accordance with Section 2.08(A) of these Specifications.

E. Meter locations shall be identified by chiseling a "W" on the face of the curb. Service taps that cannot be located from the "W" shall be identified by a "T" chiseled in the face of the curb perpendicular to the main at the tap location.

2.20 HYDROSTATIC TESTING: No hydrostatic testing shall be made on any portion of the pipeline until field-placed concrete has had adequate curing time as defined for thrust blocks in Section 2.15 of these Specifications.

The Department shall be notified twenty-four (24) hours in advance of testing. The main being tested shall not be restrained against the existing main or its appurtenances. Testing against the shut gate valves is prohibited. All testing shall be made in the presence of the Department Inspector.

Only the following methods are acceptable for supplying potable water for hydrostatic testing:

1. Water may be taken from a nearby pressurized water source which has been previously disinfected, tested and accepted by the Department, such as a fire hydrant.

2. Water may be delivered to the site in a disinfected water truck having a minimum capacity of three hundred (300) gallons. The water truck shall be used exclusively for the transportation of potable water.

3. Any previously tested, disinfected and Department-accepted main which is pressurized and is to serve the new main may be tapped on the pressurized side of the closed valve.

In any event, the method of supplying water as well as the source of water for hydrostatic testing shall be certified and approved by the Department. Use of barrels, sanitary or otherwise, to supply water for hydrostatic testing is strictly prohibited.

The Department will not furnish the calibrated meter or the pump required for testing. The main shall be properly backfilled and shall be in a state of readiness for testing. All bulkheads, pumps, taps, and appurtenances necessary to fill the main and maintain the required pressure shall be in place. The main shall be filled with water at a rate which will not cause any surges or exceed the rate at which the air can be released. The main shall be subjected to a hydrostatic pressure of one and one-half (1-1/2) times the maximum static pressure at the highest point along the test section by means of a continuously operating pump, equipped with a bypass valve for regulating pressure. The specified test pressure shall be based on the elevation of the lowest point of the line or section under test and corrected to the elevation of the test gage.

All air in the main shall be properly purged. Where blow-offs or hydrants are not available or are not effective in purging air from the line, the Department shall require a tap to purge the main. The location and size of tap shall be at the Department's discretion.

The test pressure shall be maintained at plus or minus five (5) psi for a period of two (2) continuous hours during which an examination of the main shall be made, and any leaks repaired. Any pipe or fitting found to be faulty shall be removed and replaced. No leakage shall be allowed through the bonnet of line valves. Any valve leaking shall be repaired in place or removed and replaced. Cutting and replacing pavement, excavating, and backfilling may all be necessary parts of locating and repairing leaks discovered by pressure testing of pipe.

After all visible leaks have been stopped, the full test-pressure shall be maintained for two (2) continuous hours. No leakage shall be allowed for steel pipe with welded joints. Allowable leakage for ductile iron pipe shall not exceed the amount determined by the following formula:

$$L = S \cdot D \cdot P^{1/2} \div 133{,}200$$

L = Allowable leakage (gallons per hour)
S = Length of pipe tested (feet)
D = Nominal diameter of the pipe (inches)
P = Average test pressure during the test (psi)

Testing against closed valves is prohibited. When fire hydrants are in the test section, the test shall be made against the closed fire hydrants.

Should testing show a leakage rate in excess of the rates computed, the main shall not be accepted. The main shall be repaired and retested as described in this Section until it meets the test requirements.

2.21 TESTING: Testing of the completed piping system and appurtenances shall be the responsibility of the Developer and shall comply with the appropriate AWWA standard for installation of the water mains. The Developer must, at no expense to the Department, locate leaks and make repairs as necessary until leakage is within specified limits before the system will be accepted by the Department. A report of the testing shall be provided by the Developer to the Department before acceptance of the facilities.

2.22 DISINFECTION: All main extensions will be disinfected by the Department before they are accepted by the Department. The Contractor shall install temporary valved inlets at points designated by the Inspector to enable disinfection of the mains. Disinfection of the completed main installation shall be done after hydrostatic testing, in accordance with AWWA Standard C601, as last revised. Before filling the pipe with water, the pipe shall be clean and free from debris to the satisfaction of the Department's Inspector. The Department shall be notified at least forty-eight (48) hours prior to the desired disinfection time.

2.23 ACCEPTANCE AND RELEASE FOR WET TAPS: A main will be accepted by the Department and released for wet taps only when the following conditions have been met:

A. The main and all appurtenances have been installed to the satisfaction of the Department and all pertinent notes and measurements have been made.

B. The main has been successfully pressure tested to the requirements of Section 2.20.

C. Water Quality Division has disinfected and released the main for taps.

2.24 CONNECTIONS TO THE DEPARTMENT'S SYSTEM

A. Connections: Connections to the Distribution System are generally made by the Contractor unless the Department determines it is in its best interest to have the Department make the connection. Connections shall be performed in a neat and workmanlike manner in accordance with Sheets 9 through 12 of Appendix 2. The Department's Inspector shall be present at all times during construction of the connection. The connection shall be subject to approval by the Department. Under no circumstances shall a non-disinfected main, which cannot be isolated, be connected to a disinfected main.

The Department is not responsible for water tightness of its valves on existing facilities. If existing valves leak, the Department will assist in reducing the influx of water, but the Contractor shall use methods at his or her own disposal to work with the resulting leakage.

All connections to Trunk Lines owned or controlled by the Department will be made by the Department, unless otherwise noted on the drawings. The Department will provide and install all fabricated pipe, tapping sleeves, valves, etc., that are necessary to construct the connection, unless otherwise noted on the drawings.

B. Operation of Valves: In connecting to the Department's system, it may be necessary to operate existing Department valves. All line valves in the Department's system shall be operated by Department personnel only. The Contractor shall give the Department at least forty-eight (48) hours' notice to arrange for operation of the valves. Both the Contractor and the Department's Inspector shall be present when the valves are operated.

C. Interruption of Service: The Contractor shall provide written notification forty-eight (48) hours in advance to all affected Department customers of temporary water outage on Contractor-installed connections that cause interruption in service. Outages shall be kept to a minimum.

2.25 TEMPORARY RESURFACING

A. Temporary road patch material shall be placed where pavement has been removed for installation of water facilities. The trench compacted backfill shall be removed from the excavation to a depth of not less than two inches below the surrounding pavement area. The pavement edges shall be trimmed square and shall be cleaned before any temporary paving material is placed. The temporary paving material shall be spread, rolled and finished in accordance with Section 302 of the Standard Specifications for Public Works Construction, current edition. The Contractor shall maintain the temporary surfacing in good order until permanent resurfacing is placed.

B. Temporary resurfacing material shall conform to the requirements of Section 306-1.5.1 of the Standard Specifications for Public Works Construction, current edition.

2.26 PERMANENT SURFACING: Arrangements for placement of permanent surfacing shall be the responsibility of the Contractor and in accordance with Section 306-1.5.2 of the Standard Specifications for Public Works Construction, current edition. All streets shall be restored in accordance with the regulations and requirements of the agency having control or jurisdiction over the street, roadway, or easement. All standpipes, gate caps, maintenance holes, fire hydrants, and other main appurtenances shall be adjusted to the final finished grade by the Contractor. Each of the areas to be permanently surfaced shall be identified by the use of a surveyor's type tag, fixed by a PK masonry nail driven into the center of the resurfaced area of scattered cuts and at 50-foot intervals for trenches. The tag shall be furnished and installed by the Contractor and shall include the Contractor's name, DWP-WS, and the year that the resurfacing was placed. The Department reserves the right to modify the identification system.

A. Unsurfaced Areas: All surface cuts shall be restored to a condition equal to that prior to construction.

B. Surfaced Areas: All surface cuts shall be, as a minimum, restored to a condition equal to that prior to construction.

C. Easements, Cultivated or Agricultural Areas: In easements, cultivated or agricultural areas, topsoil to a depth of eight inches (8") shall be removed from the area of general disturbance and stockpiled. After installation of all pipelines, appurtenances and structures, and completion of all backfill and compaction, the stockpiled topsoil shall be redistributed evenly over all disturbed areas. Care should be taken to conform to the original ground contour or final grading plans.

2.27 AS-CONSTRUCTED DATA: The Contractor shall cooperate with the Design Engineer in compiling as-constructed data of the water distribution system revisions, no later than two (2) weeks after completion of the project, by completing the Field Notes Drawing in accordance with the Department's latest "Field Notes and As-Constructed Drawings Manual." Accuracy shall be to within 0.5 feet horizontally and to within 0.1 feet vertically. As-constructed survey data shall be provided for all Distribution Mains installed in the absence of curbs. Service installation documents will be prepared by the Inspector unless the Department directs the Contractor to do so, or services are not installed in conjunction with installation of main. The Contractor shall cooperate with the Inspector in compiling as-constructed service lateral data. The water system will not be activated until all the conditions are met.

2.28 PROTECTIVE CONCRETE SLABS OVER PIPES: Under unusual circumstances, it may be necessary to lay pipe at shallow depths. Concrete slabs shall be used over the pipe to protect it from traffic. The slabs shall be designed to support traffic loads without transmitting the impact, or load, to the pipe whenever the pipe cover is less than two feet (2'). Concrete slabs shall be installed only with the approval of the Department.

2.29 CRITERIA FOR THE SEPARATION OF WATER MAINS AND SANITARY SEWERS: The contents of this section are provided in case field conditions dictate changes from the project drawings. No changes in pipe location shall be made prior to the Inspector's approval. See Sheet 4 of Appendix 2.

A. Basic Separation Standards: The following are minimum separation requirements for water mains and sewer lines:

(1) Parallel Construction: The horizontal distance between pressure water mains and sewer lines shall be at least ten feet (10').

(2) Perpendicular Construction (Crossing): Pressure water mains shall be at least one foot (1') above sanitary sewer lines where these lines must cross.

(3) Separation distances specified in (1) and (2) shall be measured from the nearest edges of the facilities.

(4) Common Trench: Water mains and sewer lines must not be installed in the same trench.

B. Exceptions to Basic Separation Standards: When water mains and sanitary sewers are not adequately separated, the potential for contamination of the water supply increases. Local conditions, such as available space, limited slope, existing structures, etc., may create a situation where there is no alternative but to install water mains or sewer lines at a distance less than that required by the Basic Separation Standards. In such cases, refer to Sheet 4 of Appendix 2.

Water mains and sewers of twenty-four inches (24") diameter or greater may create special hazards because of the large volumes of flow. Therefore, installations of water mains and sewer lines twenty-four inches (24") diameter or larger should be reviewed and approved by the health agency prior to construction.

C. Special Provisions:

1. The Basic Separation Standards are applicable under normal conditions for sewage collection lines and water distribution mains. More stringent requirements may be necessary if conditions, such as high groundwater, exist.

2. In the installation of water mains, measures should be taken to prevent or minimize disturbances of the existing line. Disturbance of the supporting base of this line could eventually result in failure of this existing pipeline.

2.30 CONCRETE STRUCTURES

A. Form Work: Forms shall conform to shapes, lines and dimensions of the members as shown on the drawings. Form work shall also be in compliance with applicable local building and construction codes. Embedded metal ties with snap-off ends shall be used for internal form ties. Use of ordinary wire ties will not be allowed, nor will withdrawal of form ties through the walls be permitted.

Forms may be made of wood or metal, subject to the approval of the Department. Where the finished concrete surface will be exposed, the forms shall be void of any irregularities, such as knotholes and chips.

Before concrete is placed, all forms shall be carefully cleaned, all reinforcement securely tied, and all necessary openings blocked out. Any material necessary for the support of piping and valves shall be supplied by the Contractor.

Forms shall not be disturbed until concrete has hardened sufficiently to permit their removal with safety. The removal of forms shall be carried out in such a manner as to ensure the safety of the structure. Supervisory personnel shall be present at the time the forms are removed, and shall be responsible for the safety of this operation.

B. Workability of Concrete: Concrete shall be of a consistency and composition that it can be worked readily into the corners and angles of the forms and around the reinforcement without permitting the materials to segregate, or free water to collect on the surface. No chlorides shall be added to the concrete mix.

C. Mixing and Placing Concrete: Before placing concrete, all equipment for mixing and transporting concrete shall be clean. All debris or water shall be removed from the places to be occupied by the concrete. Wooden forms shall be thoroughly wetted or oiled. No concrete shall be placed until forms, reinforcing steel, and cleanup have been approved by the Department.

Concrete shall be placed only in the presence of the Department Inspector unless inspection has been waived prior to the placement.

Concrete shall be conveyed from the mixer to the place of final deposit by methods which will prevent separation or loss of materials. All concrete placed shall have a temperature of at least 50° F (10° C), but not more than 90° F (32° C).

Concrete shall be deposited, as nearly as practicable, in its final position to avoid segregation due to rehandling or flowing. No concrete that has partially hardened or been contaminated by foreign materials shall be deposited, nor shall retempered concrete be used.

D. Finishing Concrete: All unformed surfaces shall be screeded and wood float-finished. Floor surfaces shall be roughened by light brooming following the wood float-finish.

After the form work is removed, the voids in all formed surfaces shall be filled with patching mortar and form ties cut back and dry packed if necessary.

E. Curing and Protecting Concrete: The finished concrete shall be protected for a period of three days and maintained at a temperature of not less than 50° F (10° C). Precaution must be taken during hot weather to prevent cracks due to thermal contraction. Newly placed concrete shall be allowed to set undisturbed for a minimum curing time of twenty-four (24) hours.

When concrete is deposited against the ground without the use of forms, the ground shall be thoroughly moistened or other provisions made to prevent the ground from absorbing water from the concrete.

Concrete shall be protected with a Department-approved curing membrane immediately after removal of the forms, or on completion of finishing of floors or slabs. White membrane shall be used on non-water-bearing surfaces where concrete is exposed to the direct rays of the sun. The membrane shall be a nontoxic type.

2.31 REINFORCING STEEL FOR CONCRETE STRUCTURES

A. Installation: Reinforcing steel shall be accurately formed to the dimensions indicated on the drawings. Bends in bars shall be made cold. Bars with kinks or bends not shown on the drawings shall not be used.

Splices shall be located where shown on the drawings. Splices at other locations shall be approved by the Design Engineer. Welded wire mesh shall be lapped one space and securely wired together. Before the reinforcement is embedded in concrete, the surfaces of the bars, and bar supports, shall be cleaned of heavy flaky rust, loose mill scale, dirt, grease, or other foreign substances which are objectionable. Reinforcement will be inspected for compliance with requirements as to size, shape, length, splicing position, and amount after it has been placed.

B. Placing of Reinforcing Steel: Reinforcing steel shall be accurately placed and secured in position by using annealed iron wire ties so that it will not be displaced during the placing of the concrete. Chairs, hangers, spacers, and other supports for reinforcement may be concrete, galvanized, or plastic coated metal, or other approved material.

Steel reinforcement shall be protected by the thickness of concrete indicated on the plans. Where not otherwise shown, the thickness of concrete over the reinforcement shall be as follows:

1. Where concrete is deposited against the ground without the use of forms, not less than three inches (3").

2. Where concrete is exposed to the weather, or exposed to the ground but placed in forms, not less than two inches (2") for bars more than five-eighths inch (5/8") diameter and one and one-half inches (1-1/2") for bars five-eighths inch (5/8") diameter or less.

3. In slabs and walls not exposed to the ground or to the weather, not less than three-quarters inch (3/4").

4. In all cases, the thickness of concrete over the reinforcement shall be "clear" and at least equal to one and one-half (1-1/2) diameters that of the reinforcement bars.

III. Special Conditions for Ductile Iron

3.01 SPECIAL CONDITIONS - DUCTILE IRON PIPE AND APPURTENANCES

A. General: The methods of installation for water distribution systems using ductile iron pipe and appurtenances shall comply with AWWA Standard C600.

B. Pipe Installation:

1. Rubber gasket joints: Rubber gasket joints shall be installed in accordance with the manufacturer's instructions except that the deflection angle per joint shall not exceed three degrees (3°). Immediately before joining two lengths of ductile iron pipe, the inside of the bell, the outside of the spigot end, and the rubber gasket shall be thoroughly cleaned to remove oil, dirt, grit, excess coating, and other foreign matter. Lubrication shall be placed along the jointing surfaces of the pipe. The rubber gasket shall be flexed inward and inserted in the gasket recess of the bell socket. Caution shall be exercised to ensure the correct type of gasket is used. The two sections of pipe together with the rubber gasket shall then be the sole element of the joint depended upon to provide water tightness, and care shall be taken to prevent pinching or tearing of the rubber gasket.

   The spigot end of the pipe shall be placed in the bell end with care to prevent the joint from contacting the ground. The joint shall be completed by slowly and steadily pushing the pipe home. Pipe furnished without a depth mark shall be marked before assembly to assure insertion to full depth of the joint. The spigot end of field-cut pipe lengths shall be filed, or ground to resemble the spigot end of such pipe as manufactured.

2. Flanged Joint: Before joining flanged joint fittings, all parts and jointing surfaces shall be thoroughly cleaned to remove oil, dirt, grit, excess coating, and other foreign matter.

   Prior to bolting flanges, connecting fittings or pipe shall be properly supported to reduce stress on the flanges. With the flanges properly aligned, the gasket shall then be slipped into position, and secured in position by inserting the bolts through the flanges. All nuts shall be turned finger tight, then tightened in a staggering sequence by a wrench.

3. Lead joints: Lead joints, where required, shall be constructed with the lead embedded in the joint a minimum of 2-1/2 inches in ductile/cast iron pipe joints. Rubber or paper packing shall be packed tightly in the bottom of the joint. The joint shall be poured with molten lead in one continuous pour. Lead shall meet the requirements of ASTM B29, specifications for pig lead. After the poured joint has cooled, all clay or material used as a mold shall be removed from the pipe, and the lead shall be caulked a minimum of four passes to ensure a secure, watertight joint.

4. Mechanical Couplings: When installing mechanical couplings, care shall be taken to ensure that the connecting pipe ends, couplings, and gaskets are clean and free from all dirt and foreign matter with special attention given to the contact surfaces of the pipe, gaskets, and couplings. These couplings shall be assembled and installed in conformity with the recommendations and instructions of the coupling manufacturer. The two sections of pipe connected by the mechanical coupling shall be separated by a minimum of one inch. Coupling bolts shall be tightened so as to secure a uniform annular space between the follower rings and the body of the pipe and all bolts tightened approximately the same amount. Diametrically opposite nuts shall be tightened progressively and evenly. Final tightening shall be done with a torque-limiting wrench set for the torque recommended by the coupling manufacturer.

   On pipes twelve inches (12") and smaller, mechanical couplings installed within sixty feet (60') of fittings subjected to unbalanced hydrostatic forces shall be restrained by using yokes and rods furnished by the Department. On pipes sixteen inches (16") and larger, other forms of restraint shall be used, per the drawings.

5. Polyethylene Encasement: Ductile iron pipe and all appurtenances shall be wrapped with polyethylene tubes. The pipe must be clean prior to installation of the polyethylene tubes. The polyethylene encasement shall prevent contact between the pipe and bedding material.

   Polyethylene pipe wrap material shall be applied to line pipe and appurtenances in the manner shown on Sheet 5 of Appendix 2. The polyethylene shall be clear colored, have a minimum wall thickness of eight (8) mils, and shall conform to the Materials Specifications. A 10-mil thick dielectric pressure-sensitive tape shall be used to close seams or hold overlaps. Damage to polyethylene pipe wrap in the trench prior to and during backfill shall be repaired to the satisfaction of the Department. Exposure to sunlight of the polyethylene pipe wrap shall be minimized to prevent deterioration.

6. Service taps: Service taps on new mains shall be wet-tapped. Wet-tap connections shall be made after testing and chlorination of the main installation. Polyethylene wrap damaged during the tapping operations shall be repaired in accordance with Sheet 5 of Appendix 2. Meter locations shall be identified by chiseling a "W" on the face of the curb. Service taps that cannot be located from the "W" shall be identified by a "T" chiseled in the face of the curb perpendicular to the main at the tap location.

7. Gate Valve Location: Each gate valve location shall be referenced on the curb. At a convenient nearby location, an arrow approximately 4 to 5 inches shall be chiseled on the top of the curb pointing to the gate. The distance, in feet, from the arrow to the gate shall be chiseled on the face of the curb below the arrow.

IV. Special Conditions for Steel Pipe

4.01 SPECIAL CONDITIONS - STEEL PIPE AND APPURTENANCES

A. General - The pipe shall be electric-resistance welded, lined and coated steel water pipe, slip-jointed for field welding. The steel shall comply with ASTM A53, Type E, Grade A, except the pipe wall thickness shall have a maximum allowable variation of -3% and +2% of the specified thickness.

The Contractor shall furnish the Department with a certified copy of the mill test reports showing the chemical and physical test results of the steel. The pipe shall be inspected by the Department prior to cutting, belling, lining and coating. The Department shall retain the right to inspect and/or test the pipe at each of these phases. The Department shall be notified five (5) days in advance of the required inspection.

Installation of steel pipe and appurtenances shall be in accordance with the AWWA M11 Steel Pipe Manual and DWP W293.

B. Pipe Installation:

1. Welding: Field-welded joints and connections shall be performed in accordance with the procedure of the American Welding Society by operators currently qualified under the Standard Qualification Procedure, Standard D10.9, of the American Welding Society, as last revised. Joints shall be welded externally only. The weld shall be equal in thickness to the thinnest member being joined.

   The Department shall have the right to require any welder to qualify by calling for and witnessing the making of test specimens by the welder. The expense of such tests shall be paid by the Contractor. The Department retains the right to provide welding inspections during the course of the project.

2. Flanged Joint: Before joining flanged joint fittings, all parts and jointing surfaces shall be thoroughly cleaned to remove rust-preventing grease, oil, grit, burrs, excess coating, and other foreign matter.

   Prior to bolting flanges, connecting fittings and pipe shall be properly supported to reduce stress on the flanges. With the flanges properly aligned, the gasket shall then be slipped into position, and secured by inserting the bolts through the flanges. All nuts shall be turned finger tight, then tightened in a staggering sequence by a wrench.

3. Coatings: Field-joints, connections, gate valves, mechanical couplings and all other fittings shall be coated in accordance with AWWA C203 standards (hot-applied, coal-tar enamel), AWWA C205 standards (reinforced cement-mortar coating), as last revised, or non-toxic grease and wax tape as listed in the Material Specifications, Appendix 1.

   Irregular shaped fittings such as gate-valves or mechanical couplings shall be coated with two coats of pipe mastic. Fiberglass mat fabric, coal-tar saturated, 20 x 20 mesh, shall be used as a reinforcement in the first coat, and after allowing for air drying, the second coat shall be applied. All mastic coatings shall be air dry prior to backfilling.

   Mortar-coated steel pipe shall have the pipe joints coated with a cold-applied tape coating, followed by a 3/4-inch thick overcoat of wire-mesh (2" x 2" No. 12 gauge, galvanized) reinforced cement mortar.

   All field enameling or wrapping shall be tested by the Developer using an electrical holiday detector in accordance with AWWA C203 Section 2.14.12 for enameling and AWWA C209 Section 4.4 for wax tape, and any flaws or holidays found shall be repaired by the Developer in accordance with AWWA C203 Section 2.14.12 for enameling and AWWA C209 Section 3.4 for wax tape.

4. Mechanical Couplings: Mechanical couplings installed on steel main extensions shall be non-insulating type and shall be bonded in accordance with Appendix 1. When installing mechanical couplings, care shall be taken to ensure that the connecting pipe ends, couplings, and gaskets are clean and free of all dirt and foreign matter with special attention given to the contact surfaces of the pipe, gaskets, and couplings. These couplings shall be assembled and installed in conformity with the recommendation and instructions of the coupling manufacturer. Coupling bolts shall be tightened so as to secure a uniform annular space between the follower rings and the body of the pipe and all bolts tightened approximately the same amount. Diametrically opposite nuts shall be tightened progressively and evenly. Final tightening shall be done with a torque-limiting wrench set for the torque recommended by the coupling manufacturer.

   Anchor boxes conforming to Sheet 8 of Appendix 2. shall be installed on all mechanical couplings.

5. Insulating Joints: Pipe connections between dissimilar metals shall be insulated from each other at the locations indicated, using insulating assemblies as noted on the project drawings. Preassembled insulating joints shall be purchased from the Department. Special care shall be exercised during the installation of these fittings to prevent electrical conductivity across the insulating joint.

   Copper service connections, two inches and smaller, shall incorporate an insulating fitting between the corporation valve and the copper service lateral. The corporation valve and insulating fitting shall be coated prior to backfilling.

6. Service taps: Service taps shall be wet-tapped. The portions of the pipe coating removed or damaged during tapping shall be repaired using materials conforming to the Material Specifications. Meter location shall be marked by chiseling the face of the curb with a "W".

7. Cathodic Protection: When noted on the project drawings, a cathodic protection system shall be installed on the pipeline. The cathodic protection system shall be in accordance with the construction drawings and/or the Department's standard as specified in Sheets 13A through 13D of Appendix 2.

   The cathodic protection system shall be installed and tested by a Corrosion Engineer registered by the State of California, a Corrosion Specialist certified by the National Association of Corrosion Engineers, or someone under the direct supervision of a Registered Corrosion Engineer. The Department retains the option of installing and testing this system, the cost of which shall be borne by the Developer.

8. Gate Valve Location: Each gate valve location shall be referenced on the curb. At a convenient nearby location, an arrow approximately 4 to 5 inches shall be chiseled on the top of the curb pointing to the gate. The distance, in feet, from the arrow to the gate shall be chiseled on the top of the curb adjacent to the arrow.

4.02 MISCELLANEOUS METALWORK AND PIPING: All fabrication shall be equal to the best practice in modern fabricating shops. Welding shall be performed by Department-approved operators currently qualified under the Standard Qualification Procedure of the American Welding Society, as last revised. All exposed welds shall be ground smooth, and all weld splatter shall be properly removed to the satisfaction of the Inspector.

Installations involving steel pipe shall have field-welded joints, gate valves, mechanical couplings, and all other fittings coated in accordance with AWWA C203 standards (hot-applied, coal-tar enamel), AWWA C205 standards (reinforced cement-mortar coating), as last revised or non-toxic grease and wax tape. As an alternative, field-welded joints and mechanical couplings may be fitted with heat shrink sleeves made for corrosion protection that conform to the Materials Specifications.

All metal exposed to weather shall be painted with a minimum of two coats each of red oxide primer and paint of the type and color specified on the plans or by the Inspector. Surfaces to be painted shall be cleaned of oil, grease, weld spatters, burrs, grit, dust, or other objectionable surface irregularities. Copper, aluminum or galvanized pipe need not be painted, unless so directed by the Department.

All miscellaneous piping shall be installed in the best workmanlike manner. All threads on steel pipes shall be cut with sharp dies to standard depth, left clean cut, and tapered. Threaded pipe joints shall be properly sealed with an approved joint compound applied on the male threads only. When soldering copper tubing, the joint of the copper tubing shall be properly cleaned, flux applied, and soldered with lead-free solder, all applied in the best workmanlike manner. As a corrosion mitigation measure, soldered tubing shall be flushed with water to remove any flux residue.

Appendix 1

Material Specifications

STEEL PIPE
MATERIAL SPECIFICATION LIST

	Material Description	Size (in.)	Specification/Drawing Reference	Available from Water System Stores
1	Steel pipe, with slip joint for field welding, cement lined and coated	4 - 20	DWP Spec. No. W-302 (DWP Drawing Nos. A1867 and A3821)	No
2	Steel fittings, cement lined and coated	4 - 20	ANSI B16.9	No
3	Flanges	4 - 20	ANSI B16.5	No
4	Machine bolts for 2"-12" flanges and 18" maintenance hole flanges	-	ASTM A307, Grade B, ANSI B18.2	No
5	Hex nuts for 2"-12" flanges and 18" maintenance hole flanges	-	ASTM A563, Grade B, ANSI B18.2, UN-8, heavy hex	No
6	Stud bolts for 16", 20", and larger flanges	-	ASTM A193, Grade B, ANSI B18.2 (DWP Drawing Nos. A9007-1 and -2), UN-8, heavy hex	No
7	Hex nuts for 16", 20", and larger flanges	-	ASTM A193, Grade 2H, oil quenched, ANSI B18.2, UN-8, heavy hex	No
8	Gaskets	4 - 20	Garlock No. 8798, or equal (neoprene with nylon insert)	No
9a	Mechanical couplings non-insulating	4 - 20	Smith-Blair No. 411 or equal	No
9b	Mechanical couplings insulating	4 - 20	Smith-Blair No. 416 or equal	No
10a	Tie-rods and anchor boxes	4 - 12	DWP Drawing Nos. A9081-3, A9194 (Sheet 8 Appendix 2)	No
10b	Insulating sleeve and washer, one piece acetal	4 - 20	Pacific Seal, Inc. or equal	No
11	Insulating flange assemblies	4 - 20	DWP Drawing Nos. A9367 and A9417	Yes
12	Anodes	-	Latest DWP spec. (S-1027) 32-lb. Dow "Galvo Pack", or equal	No

Revised 10/94

	Material Description	Size (in.)	Specification/Drawing Reference	Available from Water System Stores
13	Heat shrink sleeves for corrosion protection	4 - 20	Raychem Heat Shrink Joint Protection Sleeve GAP7" and Raychem "Thermofit Dresser Sleeve", or equal	No
14	Cold-applied tape wrap	-	Polyken "#930 Joint-Wrap Tape", 50-mil thick, over Polyken "#1027 Pipeline Primer" or Polyken "#929 Pipeline Primer" and Polyken "#931 Filler Tape", if necessary; Tapecoat "CT 10/40W", spiral wrap, over Tapecoat "TC Cold Prime" primer; or equal	No
15	Grease and Wax Tape Coating	-	Sanchem, Inc. NO-OX-ID "GG-2" Protective Wrap Glass Mat Plastic Film, or equal	Yes
16	C.I. double disc, squared disc gate valves	16, 20	DWP Specification No. W-265 R-6 (low press. and high press. flange)	Yes
17	C.I. solid wedge, resilient seat, gate valves	4 - 12	DWP Specification No. W-244 (low press. flg.)	Yes
18	C.I. solid wedge gate valves	4 - 8	DWP Specification No. W-117 (high press. flg.)	Yes
19	C.I. double disc gate valves	12	DWP Specification No. W-171 (high press. flg.)	Yes
20	C.I. swing check valves	4 - 16	DWP Specification No. W-1086, S-1012	Yes
21	C.I. air and vacuum valves	2 - 8	APCO 144, 152, and 153, or equal; DWP Specification No. S-1009	No
22	Standpipes for 4"-12" gate valves	4 - 12	DWP Drawing Nos. A2021 and A9201	Yes
23	C.I. vertical gate caps	6	DWP Specification No. W-138 (DWP Drawing No. A9034-1)	Yes
24	24-inch manhole ring, frame and cover	-	DWP Specification No. W-159 R-4 (DWP Drawing No. C626)	Yes

	Material Description	Size (in.)	Specification/Drawing Reference	Available from Water System Stores
25	Double-outlet fire hydrants (including bury ell)	2-1/2"x4" & 4"x4"	Latest DWP spec. (DWP Drawing No. D2870)	Yes
26	Built-up fire hydrants	2-1/2", 4"	DWP Drawing No. A9143-1, -2, -3	Yes
27	Copper service tubing	1 - 2	DWP Specification No. W-1021, ASTM B-88 Type K.	No
28	Curb and corporation valves and bronze fittings	1 - 2	DWP Specification No. W-1022. Curb valve: teflon coated ball valve, iron pipe female with lockwing and lever handle. DWP Drawing A9518, A9519. James Jones Co., Ford Meter 8ox Co., or equal.	Curb valve: No
			Corporation valve: ground key valve, AWWA taper threaded inlet, flared copper connection outlet.DWP Drawing Nos. A9309, A9315.	Corp. valve & fittings: Yes
29	C.I. Companion threaded flange	2	Latest DWP spec. (DWP Drawing Nos. A9004, A9005)	No
30	Service welding couplings	1 - 1 1/2	Latest DWP spec. (DWP Drawing Nos. A9364 and A9365)	No
31	Service insulating couplings	1 - 1 1/2	Ford Meter Box Co. (S1-4, S1-6), or equal	No
32	No. 2 plastic meter boxes	-	Latest DWP spec. (DWP Drawing No. A9420)	Yes
33	No. 3 R.P.C. meter boxes	-	Latest DWP spec. (DWP Drawing No. A9422)	Yes
34	48-inch by 48-inch R.P.C. vaults and covers	-	Latest DWP spec. (DWP Drawing No. A9423, CDR Systems Corp. Drawing No. 102B00, Armorcast A-6004848Ax48B)	Yes
35	48-inch by 72-inch R.P.C. vaults and covers	-	Latest DWP spec. (DWP Drawing No. A9424, CDR Systems Corp. Drawing No. 102B00-1, Armorcast A-6004872Ax48B)	Yes

	Material Description	Size (in.)	Specification/Drawing Reference	Available from Water System Stores
36	No. 2 concrete meter covers	-	Latest DWP spec. (DWP Drawing Nos. A9204-1 and A9204-3)	Yes
37	No. 2 R.P.C. meter covers	-	Latest DWP spec. (DWP Drawing Nos. B5096 and A9204-3)	Yes
38	Nos. 2 and 3 steel meter covers	-	DWP Drawing No. A9259-2, A9260	Yes
39	Grout	-	3000 psi, 10" Slump Mix per Cu. Yd.: 10.6 Sacks Cement, 2239 lbs. Dry Sand, 530 lbs. Water	No

DUCTILE IRON PIPE
MATERIAL SPECIFICATION LIST

	Material Description	Size (in.)	Specification/Drawing Reference	Available from Water System Stores
1	Ductile iron pipe, Tyton joint, double cement lined	4 - 12	AWWA C150, C151, Class 52, C111, C104, DWP W-249-R2	No
2	Ductile iron pipe, Tyton joint, double cement lined	16, 20	AWWA C150, C151, Class 51, C111, C104, DWP W-249-R2	No
3	Gray or ductile iron fittings, Tyton joint, cement lined	4 - 20	AWWA Class 250 C110, C111, C104, C153, DWP Spec. No. W-206	No
4	C.I. spools, cement lined	4 - 8	DWP Spec. No. W-138 (DWP Drawing No. A9093)	No
5	C.I./D.I. flanged tapping sleeves	4 - 8	DWP Specification No. W-220-R2	Yes
6	Machine bolts for 2"-12" flanges and 18" maintenance hole flanges	-	ASTM A307, Grade B, ANSI B18.2, UN-8	No
7	Hex nuts for 2"-12" flanges and 18" maintenance hole flanges	-	ASTM A563, Grade B, ANSI B18.2, UN-8	No
8	Stud bolts for 16", 20", and larger flanges	-	ASTM A193, Grade B, ANSI B18.2 (DWP Drawing Nos. A9007-1 and -2), UN-8	No
9	Hex nuts for 16", 20", and larger flanges	-	ASTM A194, Grade 2H, oil quenched, ANSI B18.2	No
10	C.I. solid wedge, resilient seat, gate valves	4 - 12	DWP Specification No. W-244-R2 (low press., r.g. and flg.)	Yes
11	C.I. Double disc, squared disc gate valves	16, 20	DWP Specification Nos. W-117, W-121, W-265, (low press., and high press. flg., and caulked bell)	Yes
12	C.I. swing check valves	4 - 16	DWP Specification Nos. S-1012, W-1086, W-236	Yes

	Material Description	Size (in.)	Specification/Drawing Reference	Available from Water System Stores
24	Curb and corporation valves and bronze fittings	1 - 2	DWP Specification No. W-1022. Curb valve: teflon coated ball valve, iron pipe female with lockwing and lever handle. DWP Drawing A9518, A9519. James Jones Co., Ford Meter Box Co., or equal.	Corp. valve & fittings: - Yes
			Corporation valve: ground key valve, AWWA taper threaded inlet, flared copper connection outlet.DWP Drawing Nos. A9309, A9315.	Curb valve: - No
25	C.I. companion threaded flange	2	Latest DWP spec. (DWP Drawing Nos. A9004, A9005)	No
26	Bronze service clamps	1 - 2	Latest DWP spec., S-1028	No
27	No. 2 plastic meter boxes	-	Latest DWP spec. (DWP Drawing No. A9420)	Yes
28	No. 3 R.P.C. meter boxes	-	Latest DWP spec. (DWP Drawing No. A9422)	Yes
29	48-inch by 48-inch R.P.C. vaults and covers	-	Latest DWP spec. (DWP Drawing No. A9423, CDR Systems Corp. Drawing No. 102B00, Armorcast A-6004848Ax48B)	Yes
30	48-inch by 72-inch R.P.C. vaults and covers	-	Latest DWP spec. (DWP Drawing No. A9424m CDR Systems Corp. Drawing No. 102B00-1, Armorcast A-6004872Ax48B)	Yes
31	No. 2 concrete meter box covers	-	DWP Drawing No. B5050-4	Yes
32	Nos. 2 & 3 R.P.C. meter covers	-	Latest DWP spec. (DWP Drawing No. B5096 and A9204-3)	Yes
33	No. 2 steel meter covers	-	DWP Drawing No. A9259-2	Yes

	Material Description	Size (in.)	Specification/Drawing Reference	Available from Water System Stores
34	No. 3 steel meter covers	-	DWP Drawing No. A9260-1	Yes
35	C.I. frames, center-pieces, and rings for concrete meter boxes	-	DWP Spec. No. W-153 (DWP Drawing Nos. A9289 and A9290)	Yes
36	Meters	5/8 - 10	DWP Spec. Nos. W-128, W-135, W-378, and W-1086	Yes
37	Type II Portland cement	-	DWP Specification No. G-331, ASTM C-150 Type II	No
38	Aggregate	-	DWP Specification C-391-R3	No

Appendix 2

Drawings

City of Los Angeles

Department of Water and Power

Water Operating Division

REQUEST FOR CONTRACTOR PREQUALIFICATION

Contractor:

1. Enter the type and expiration date of all licenses issued to you by the State of California that you wish to have considered:

2. Provide a list and brief description of recently completed water facility installations and references. Please be specific.

Notes:

1. The minimum liability insurance coverage required is $1,000,000.00. The Department reserves the right to require additional insurance coverage from the Applicant when deemed necessary.

2. Prequalification is subject to yearly application and renewal.

3. The Department reserves the right to require a performance test for contractors or their subcontractors who tap existing mains.

Contractor's Representative

_____ _____

Print Name Date

_____

Signature

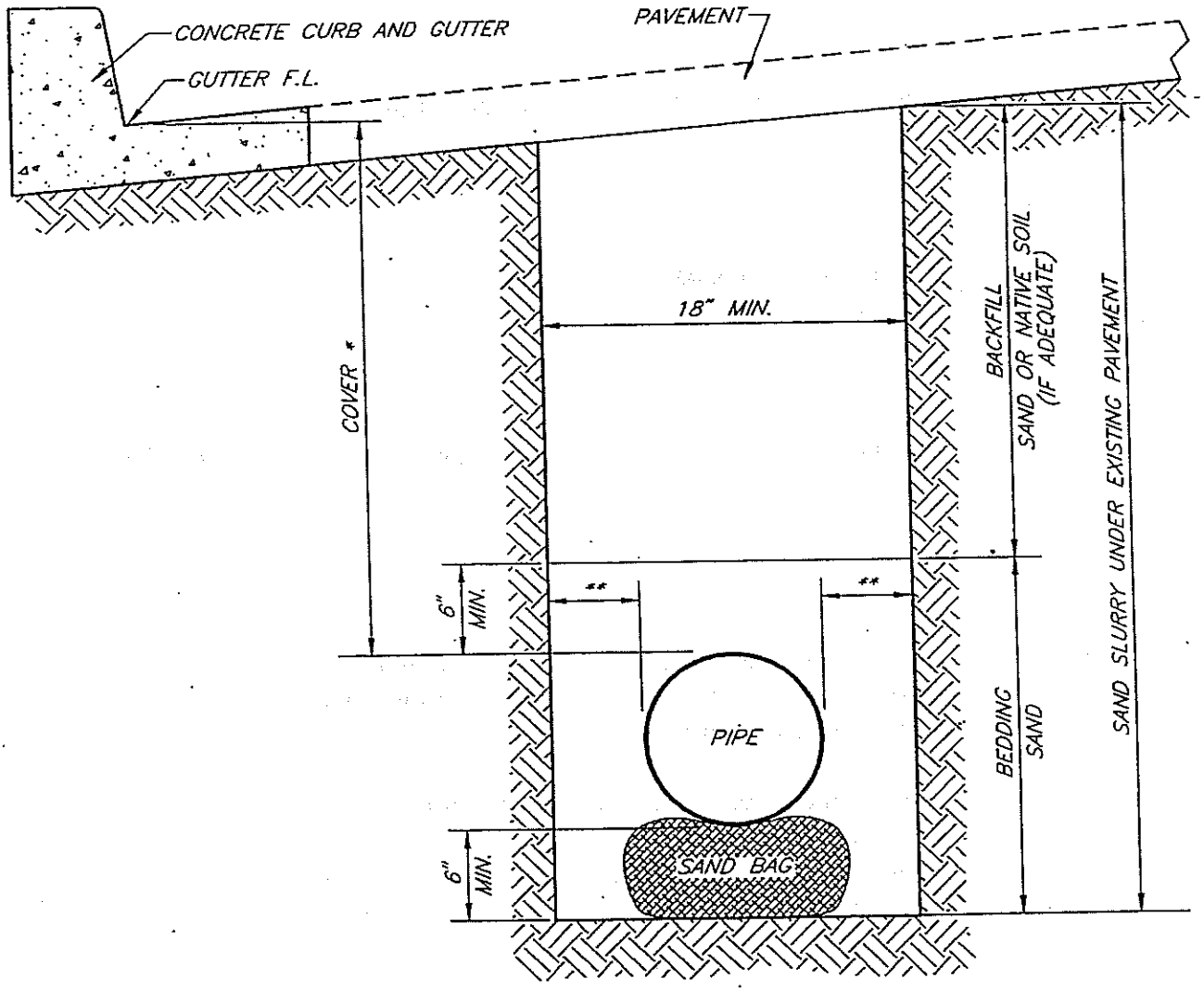

* – 48" MAX. / 36" MIN. FOR 12" DIA. AND LARGER PIPE
42" MAX. / 30" MIN. FOR 8" DIA. AND SMALLER PIPE

** – 12" MIN. FOR 16" DIA. AND LARGER PIPE
6" MIN. FOR 12" DIA. AND SMALLER PIPE

TYPICAL TRENCH SECTION

A9435

REVISIONS				
NO.	DATE	INIT.		APP'D

DEPARTMENT OF WATER AND POWER
WATER SYSTEM — CITY OF LOS ANGELES

	NAME	DATE	APPROVED
DESIGNED	L. NUNO	1-90	B. WEINSTEIN JUNE '92
DRAWN	V. TOROMANIAN	3-92	
CHECKED	L. NUNO	3-92	

D101-2.DWG

SHEET 2

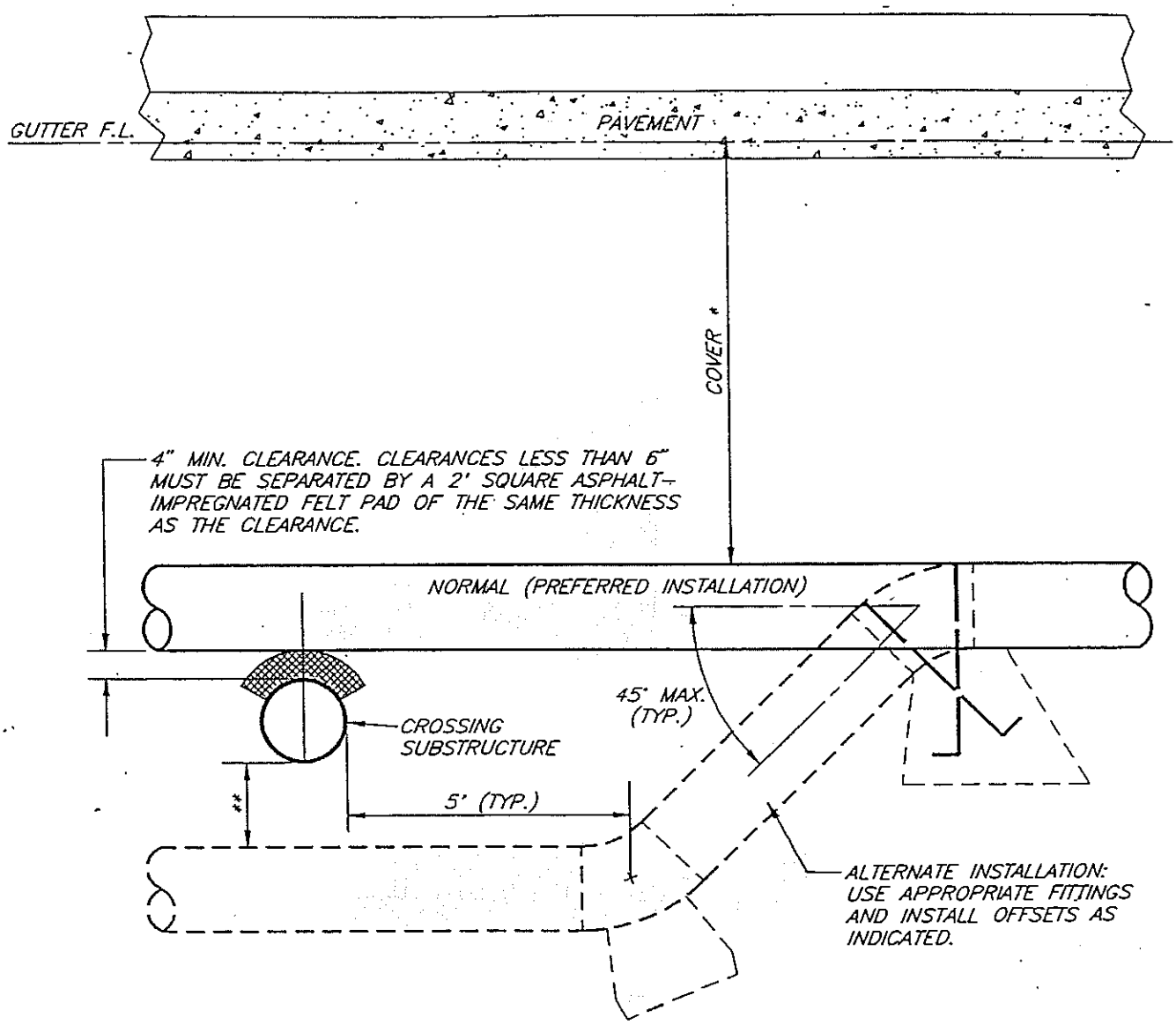

* – 48" MAX. / 36" MIN. FOR 12" DIA. AND LARGER PIPE
42" MAX. / 30" MIN. FOR 8" DIA. AND SMALLER PIPE

** – 6" MIN. CLEARANCE FOR 12" DIA. AND SMALLER DWPWS PIPE
12" MIN. CLEARANCE FOR LARGER THAN 12" DIA. DWPWS PIPE

NOTE:

THE MINIMUM CLEARANCES FOR UNDERCROSSING SHOWN HEREON SUPERCEDE THE MINIMUM OF 4" SHOWN ON SHEET 4 OF APPENDIX 2.
SEE SHEET 4 OF APPENDIX 2 FOR SPECIFICS OF SEWER CROSSING.

TYPICAL SUBSTRUCTURE CROSSING DETAIL

REVISIONS				
NO.	DATE	INIT.		APP'D

DEPARTMENT OF WATER AND POWER
WATER SYSTEM — CITY OF LOS ANGELES

	NAME	DATE	APPROVED	
DESIGNED	V. TOROMANIAN	6-94	B. WEINSTEIN	JUNE '94
DRAWN	V. TOROMANIAN	6-94		
CHECKED	C. HAMVAS	6-94		

D101-3.DWG

SHEET 3

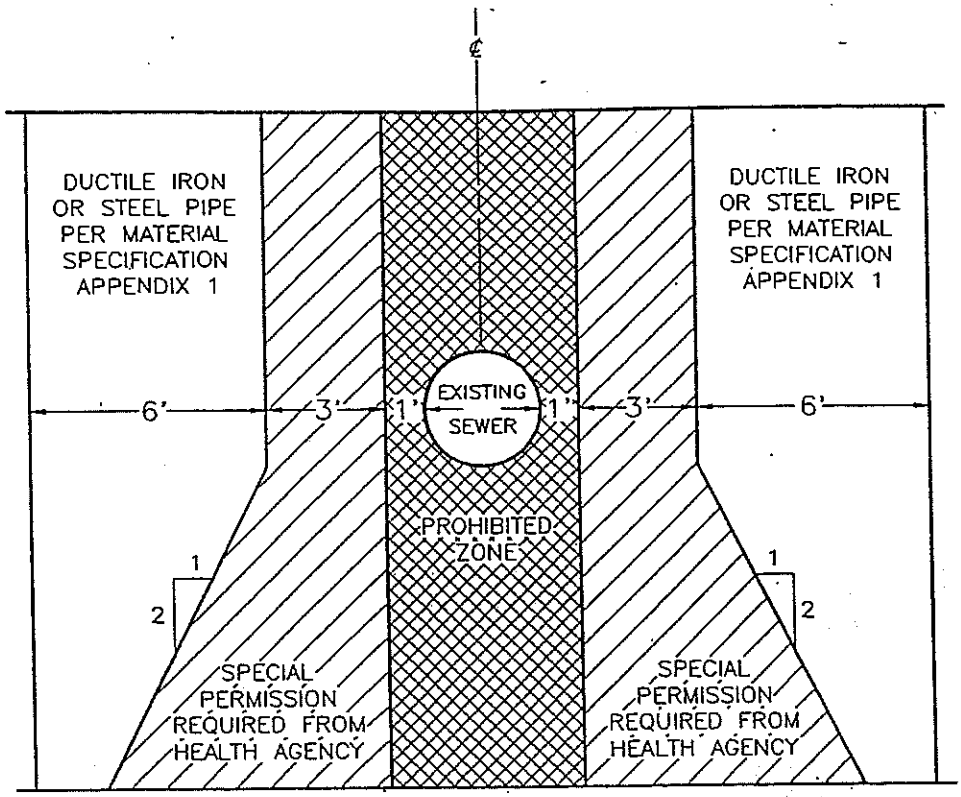

PARALLEL CONSTRUCTION

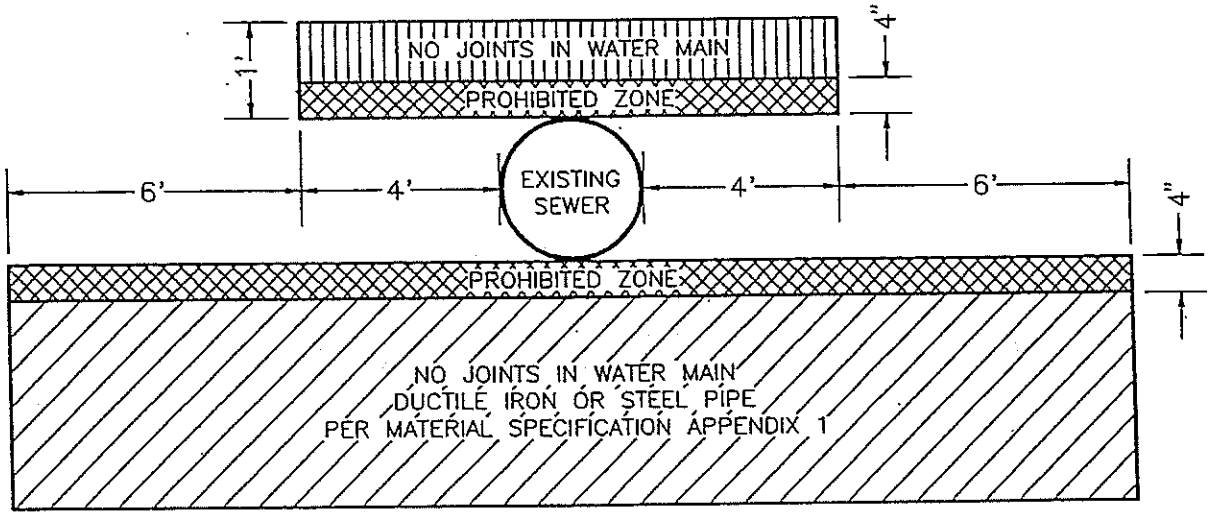

CROSSINGS

EXISTING SEWER AND NEW WATER MAIN SEPARATION

(PER STATE OF CALIFORNIA, HUMAN AND WELFARE AGENCY, DEPARTMENT OF HEALTH SERVICES)

REVISIONS				
NO.	DATE	INIT.		APP'D

DEPARTMENT OF WATER AND POWER
WATER SYSTEM — CITY OF LOS ANGELES

	NAME	DATE	APPROVED
DESIGNED			B. WEINSTEIN JUNE '94
DRAWN	V. TOROMANIAN	6-94	
CHECKED	C. HAMVAS	6-94	

D101-4.DWG

FIGURE 1

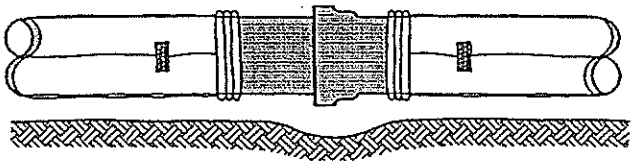

FIGURE 2

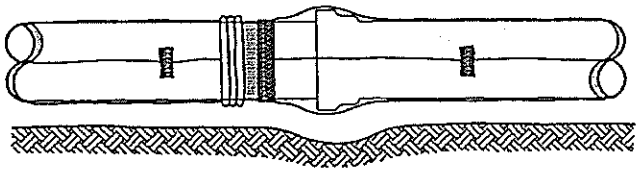

FIGURE 3

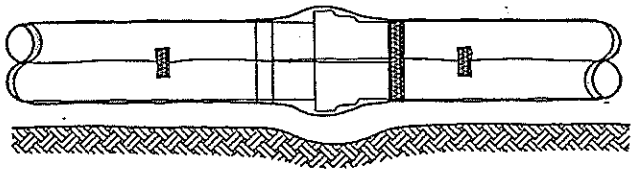

FIGURE 4

1. Cut clear-colored, 8-mil thick polyethylene tube to a length approximately 2 feet longer than that of the pipe section. The minimum flat tube width shall be 16, 20, 24, 30, and 37 inches for 4, 6, 8, 12, and 16-inch pipe respectively.

2. Ensure the pipe is clean prior to installation of the polyethylene tube. Slip the tube around the pipe, centering it to provide 1-foot overlap on each adjacent pipe section. Take up the slack width to make snug, but not tight, fit along the barrel of the pipe, securing the fold with 2-inch wide and 10-mil thick dielectric adhesive tape at quarter points (Figure 1).

3. Lower the pipe into the trench and make-up the pipe joint with the preceding section of pipe. A shallow bell hole in the bedding must be made at joints to facilitate installation of the polyethylene tube (Figure 2). Alternately, pipe may be laid on sand bags in the trench.

4. Pull the bunched polyethylene from the preceding length of pipe, slip it over the end of the new length of pipe, and secure it in place (Figure 3). Then slip the end of the polyethylene from the new pipe section over the end of the first wrap until it overlaps the joint at the end of the preceding length of pipe and secure it in place (Figure 4).

5. Repair any rips, punctures, or other damage to the polyethylene with dielectric adhesive tape or with a short length of polyethylene tube cut open, wrapped around the pipe, and secured in place. Proceed with installation of the next section of pipe in the same manner.

6. Cover bends, reducers, offsets, and other pipe shaped appurtenances with polyethylene in the same manner as the pipe.

7. When valves, tees, crosses, and other odd-shaped pieces cannot be wrapped practically in a tube, wrap with a flat sheet or split length of polyethylene tube by passing the sheet under the appurtenance and bringing it up around the body. Make seams by bringing the edges together, folding over twice, and taping down. Handle width and overlaps at joints described above. Tape polyethylene securely in place at valve stem and other penetrations.

8. Provide openings for branches, service taps, blow-offs, air valves, and similar appurtenances by making an x-shaped cut in the polyethylene and temporarily folding back the film. After the appurtenance is installed, tape the slack securely to the polyethylene, with tape. Cover all exposed clamps and other appurtenances with polyethylene to the trench wall or 3 feet beyond the pipe using the method described in step 7 above.

9. Extend the polyethylene wrap to cover adjacent DI/CI/AC pipe a minimum of 2 feet and adjacent steel pipe to the DI side of the pre-assembled insulating flange. Secure the end with circumferential turns of dielectric adhesive tape.

POLYETHYLENE WRAP INSTALLATION INSTRUCTIONS

A9440

REVISIONS				
NO.	DATE	INIT.		APP'D

DEPARTMENT OF WATER AND POWER
WATER SYSTEM — CITY OF LOS ANGELES

	NAME	DATE	APPROVED	
DESIGNED	V. TOROMANIAN	6-92	B. WEINSTEIN	JUNE '92
DRAWN	V. TOROMANIAN	6-92		
CHECKED	C. HAMVAS	6-92		

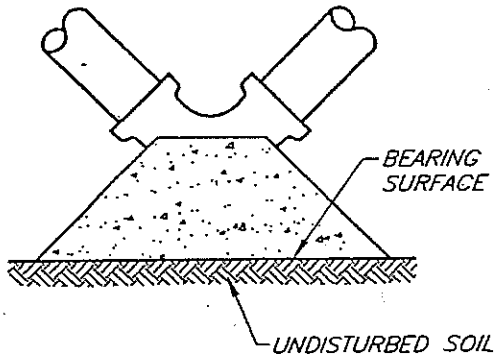

BEND

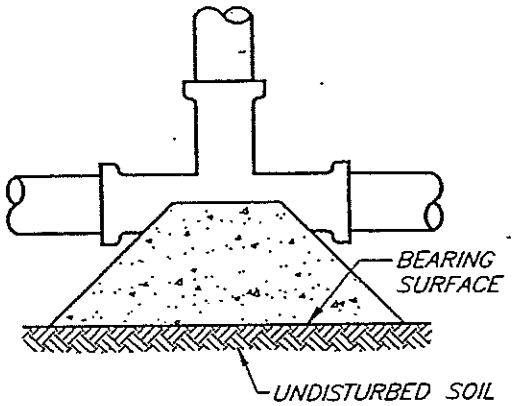

TEE OR CLAMP

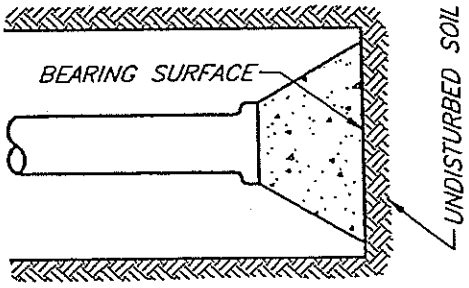

PLUGGED/CAPPED END

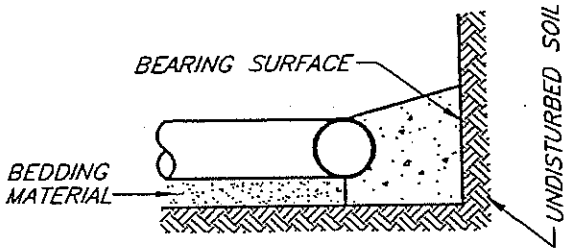

TYPICAL CROSS SECTION

TABLE I

MINIMUM BEARING SURFACE AREA (SQ. FT)

SIZE OF PIPE	BENDS				TEE, CLAMP OR PLUGGED/CAPPED END
	11-1/4°	22-1/2°	45°	90°	
4"	1	1	1	2	2
6"	1	2	3	4	3
8"	1	2	4	8	5
12"	3	5	9	16	12
16"	4	8	16	29	21
20"	7	13	25	45	32

TABLE II

FACTORS FOR INCREASING AREAS IN TABLE I

SOIL TYPE *	MAX. ALLOWABLE SOIL BEARING VALUES (PSF) **	FACTOR TO INCREASE AREA BY
LOOSE SAND	500	4
SOFT SANDY SAND	1000	2
ADOBE	1000	2
COMPACTED FINE SAND	2000	1
COMPACTED COARSE SAND	2000	1
MEDIUM STIFF CLAY	2000	1

NOTES:

1. ALL FITTINGS SUBJECTED TO AN UNBALANCED HYDROSTATIC FORCE SHALL BE RESTRAINED WITH 2000 PSI CONCRETE THRUST BLOCKS BEARING AGAINST UNDISTURBED SOIL.
2. BEARING VALUES SHOWN IN TABLE I ARE BASED ON 200 PSI INTERNAL PIPE PRESSURE AND DO NOT CONSIDER THE EFFECT OF RESTRAINED OR HARNESSED JOINTS.
3. * THE CONTRACTOR SHALL BE RESPONSIBLE FOR DETERMINING THE SAFE SOIL BEARING VALUES AND THE POSITION AND SIZE OF BEARING AREAS.
4. ** MAXIMUM ALLOWABLE SOIL BEARING VALUES IN TABLE II ARE BASED ON 2 FOOT MINIMUM DEPTH OF COVER OVER THE PIPE.

CONCRETE THRUST BLOCK BEARING SURFACE AND INSTALLATION

A9441

REVISIONS

NO.	DATE	INIT.		APP'D
	6-94	V.T.	REVISED OLD DRAWING A9441	B.W.

DEPARTMENT OF WATER AND POWER
WATER SYSTEM — CITY OF LOS ANGELES

	NAME	DATE	APPROVED	
DESIGNED	V. TOROMANIAN	6-94	B. WEINSTEIN	JUNE '94
DRAWN	V. TOROMANIAN	6-94		
CHECKED	C. HAMVAS	6-94		

D101-6.DWG

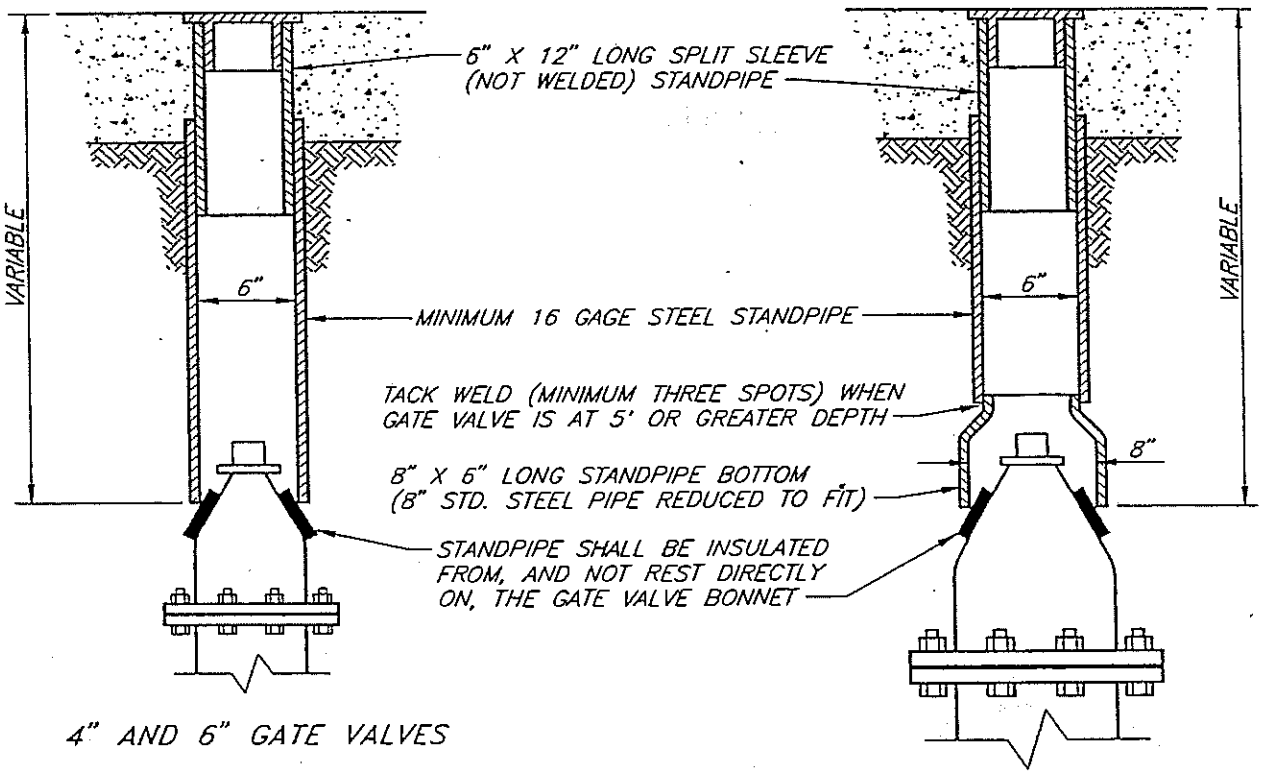

4" AND 6" GATE VALVES

8" AND 12" GATE VALVES

NOTES:

1. WELDED STANDPIPE IS FURNISHED IN 12", 18", 24", 30" AND 36" LENGTHS.
2. 6" SPLIT SLEEVE (NOT WELDED) STANDPIPE IS FURNISHED IN 12" LENGTH.

STANDPIPE FOR 4"–12" LINE VALVES

REVISIONS				
NO.	DATE	INIT.		APP'D
1	6-94	VT	REVISED AND REDRAWN OLD A9442	BW

DEPARTMENT OF WATER AND POWER
WATER SYSTEM — CITY OF LOS ANGELES

	NAME	DATE	APPROVED	
DESIGNED	V. TOROMANIAN	6-94	B. WEINSTEIN	JUNE '94
DRAWN	V. TOROMANIAN	6-94		
CHECKED	C. HAMVAS	6-94		

A9442

D101-7.DWG

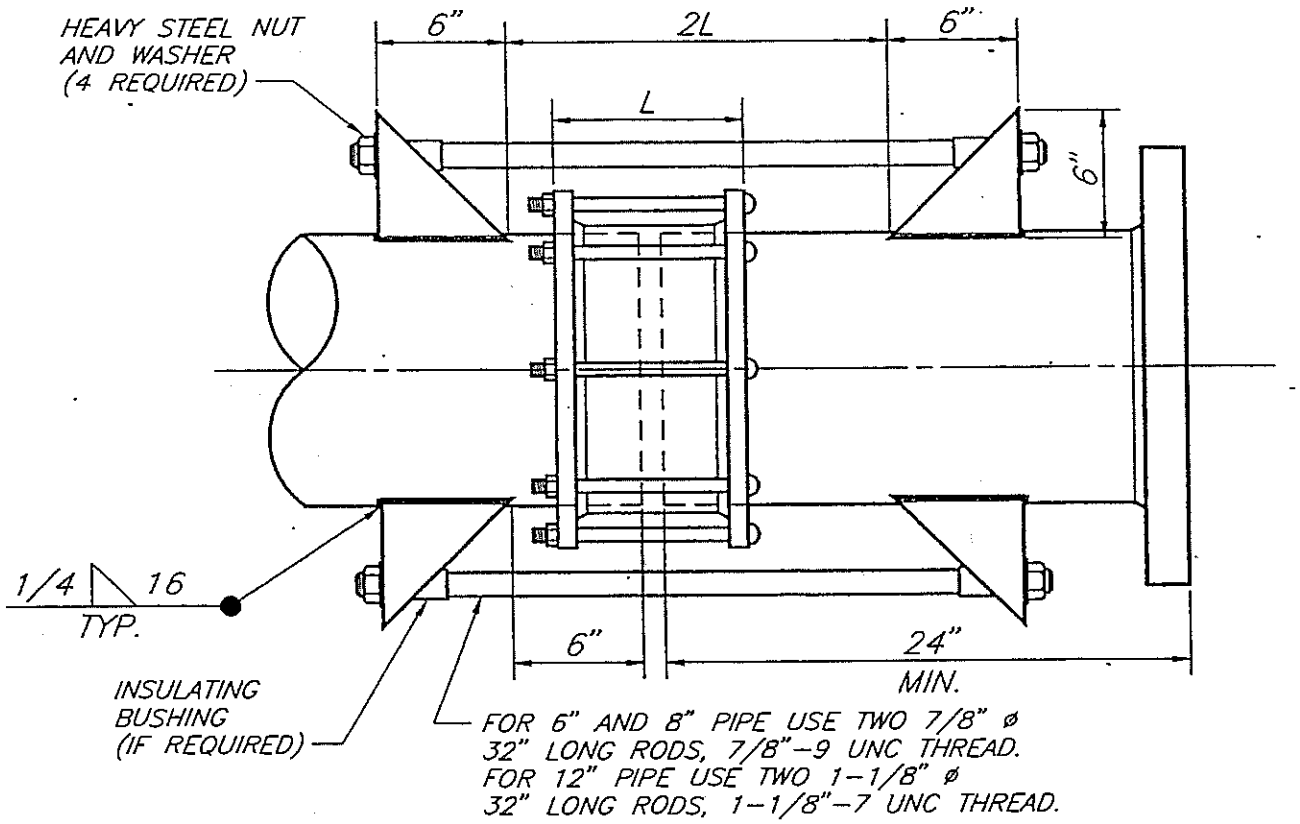

PLAN VIEW

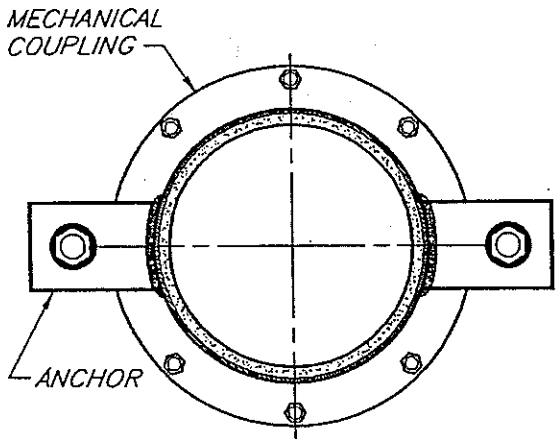

END VIEW

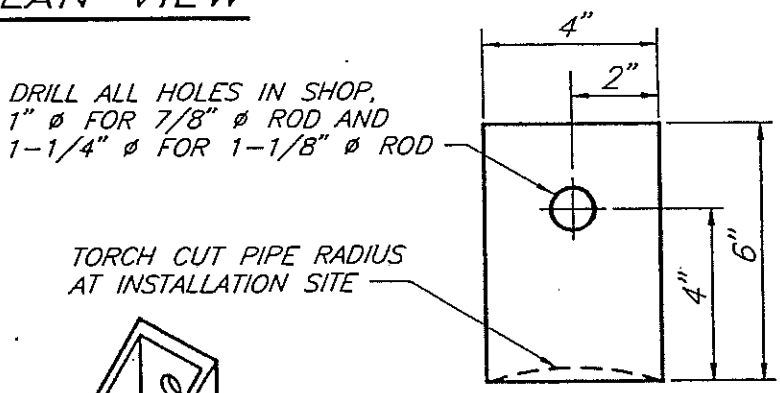

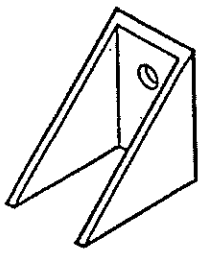

ANCHORS TO BE FABRICATED FROM 6" X 4" X 3/8" HOLLOW STEEL STRUCTURAL SECTIONS (4 REQUIRED).

ANCHOR DETAILS

NOTE: ANCHOR BOX ASSEMBLY FOR LARGER PIPE SHALL BE INDIVIDUALLY DESIGNED.

ANCHOR BOX ASSEMBLY FOR MECHANICAL COUPLING SIZES 6" THRU 12" ONLY

A9194

REVISIONS				
NO.	DATE	INIT.		APP'D
1	10-94	V.T.	REVISED OLD A9194	B.W.

DEPARTMENT OF WATER AND POWER
WATER SYSTEM — CITY OF LOS ANGELES

	NAME	DATE	APPROVED
DESIGNED	V. TOROMANIAN	10-94	B. WEINSTEIN OCT. '94
DRAWN	V. TOROMANIAN	10-94	
CHECKED	C. HAMVAS	10-94	

D101-8.DWG

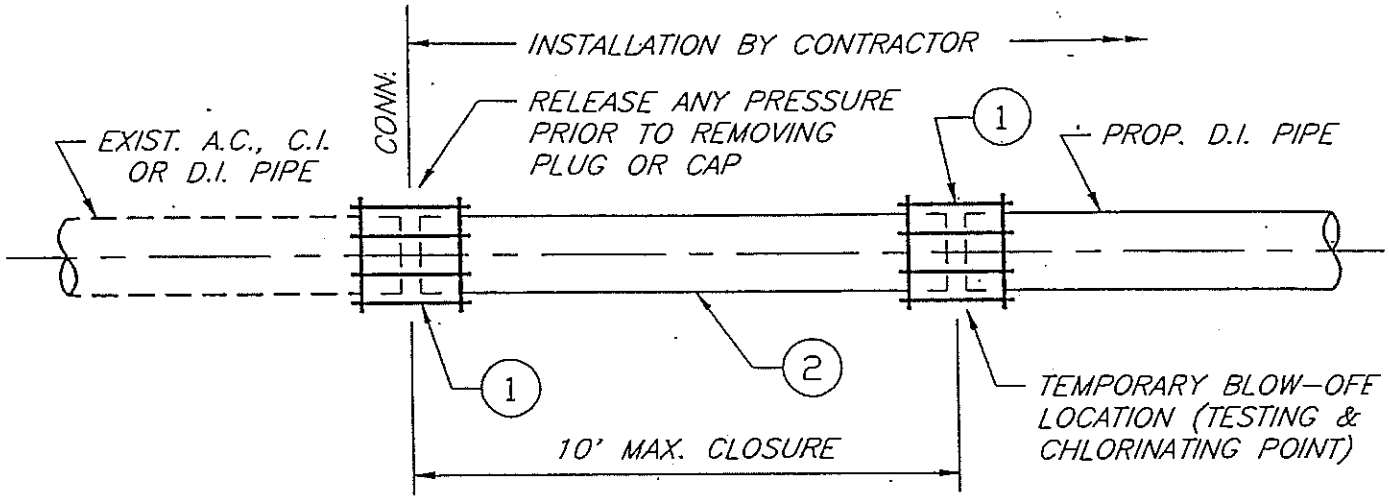

DETAIL 1 – CONNECTION TO EXISTING SPIGOT END

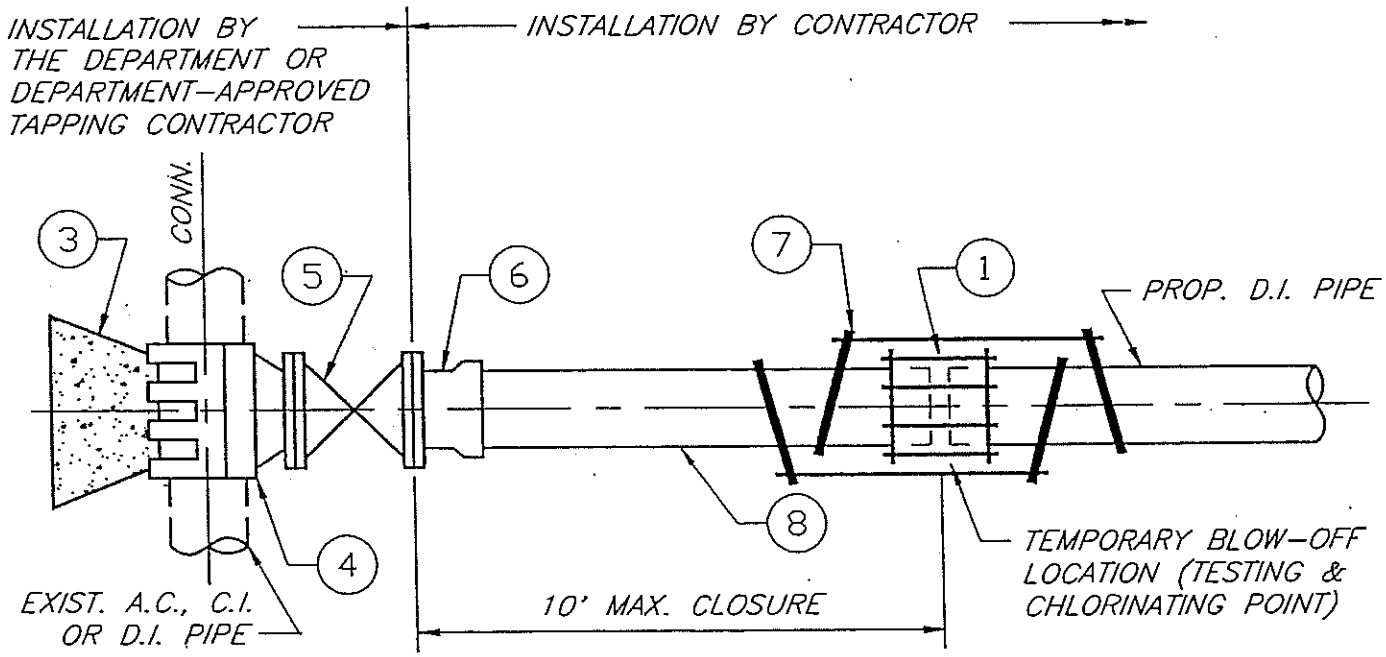

DETAIL 2 – WET-TAP CONNECTION TO EXISTING A.C., C.I. OR D.I. PIPE

1. CAST TRANS. MECH. COUPLING
2. D.I. NIPPLE
3. CONCRETE THRUST BLOCK
4. TAPPING SLEEVE
5. FLANGED GATE VALVE
6. D.I. R.G. FLANGE/BELL ADAPTOR
7. SAFETY YOKES & RODS
8. D.I. R.G. NIPPLE

D.I. PIPE CONNECTIONS TO EXISTING A.C., C.I., OR D.I. PIPE

A9451

REVISIONS				
NO.	DATE	INIT.		APP'D

DEPARTMENT OF WATER AND POWER
WATER SYSTEM — CITY OF LOS ANGELES

	NAME	DATE	APPROVED	
DESIGNED	L. NUNO	7-91	B. WEINSTEIN	JUNE '92
DRAWN	V. TOROMANIAN	11-91		
CHECKED	L. NUNO	11-91		

D101-9.DWG

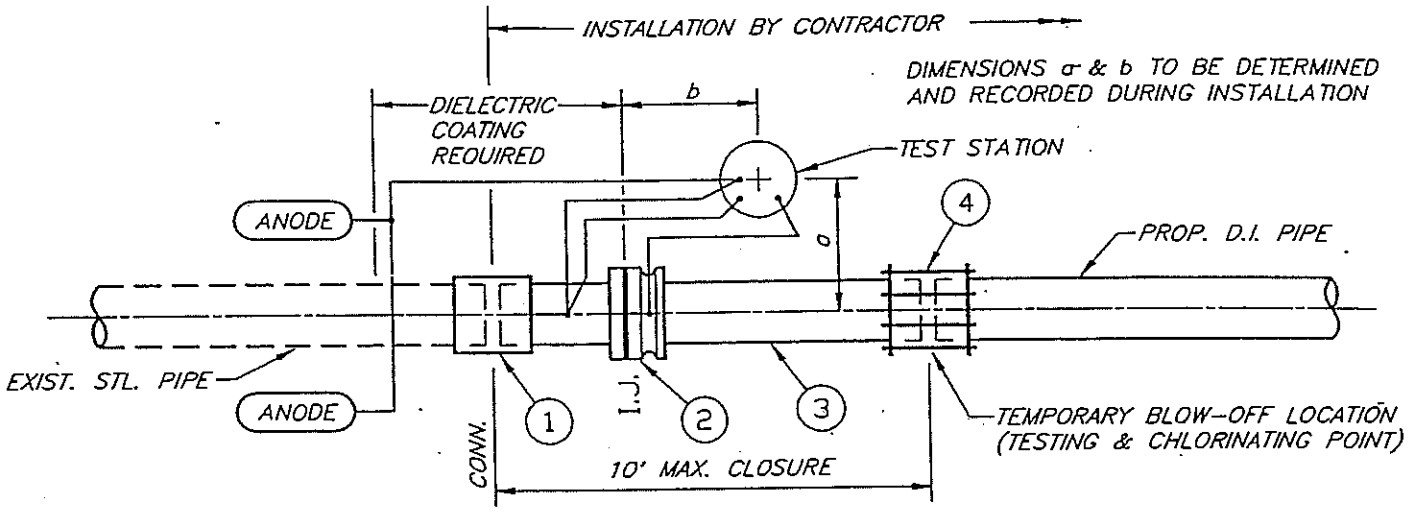

DETAIL 1 – CONNECTION TO EXISTING STEEL PIPE

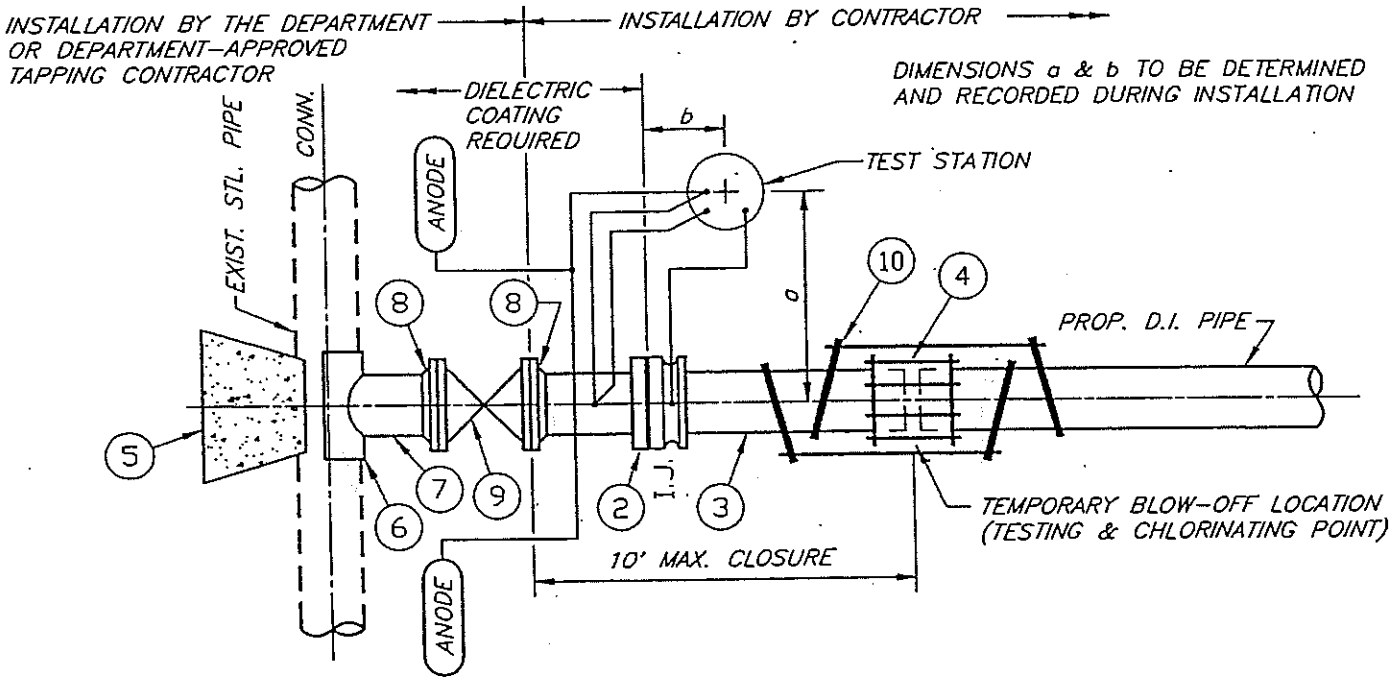

DETAIL 2 – WET-TAP CONNECTION TO EXISTING STEEL PIPE

1. STEEL BUTTSTRAP
2. PRE-ASS'D INS. FLG. TYPE I-E
3. D.I. R.G. NIPPLE
4. CAST TRANS. MECH. COUPLING
5. CONCRETE THRUST BLOCK
6. STEEL WELDING PAD
7. STEEL NIPPLE
8. WELD NECK FLANGE
9. FLANGED GATE VALVE
10. SAFETY YOKES & RODS

NOTE: SEE DRAWING NO.'S A9455-1 THRU A9455-4 FOR CATHODIC PROTECTION NOTES AND DETAILS.

D.I. PIPE CONNECTIONS TO EXISTING STEEL PIPE

A9452

REVISIONS				
NO.	DATE	INIT.		APP'D

DEPARTMENT OF WATER AND POWER
WATER SYSTEM — CITY OF LOS ANGELES

	NAME	DATE	APPROVED	
DESIGNED	L. NUNO	7-91	B. WEINSTEIN	JUNE '92
DRAWN	V. TOROMANIAN	11-91		
CHECKED	L. NUNO	11-91		

D101-10.DWG

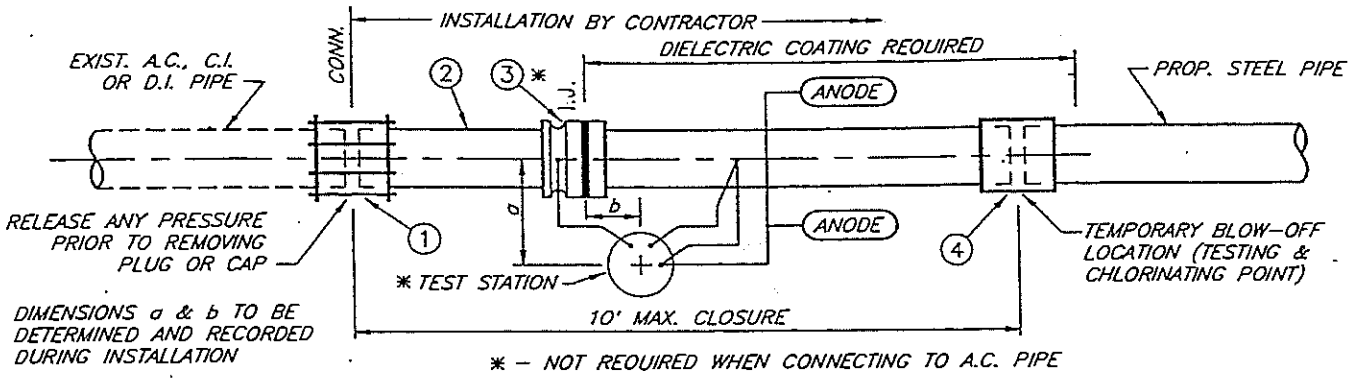

DETAIL 1 - CONNECTION TO EXISTING SPIGOT END

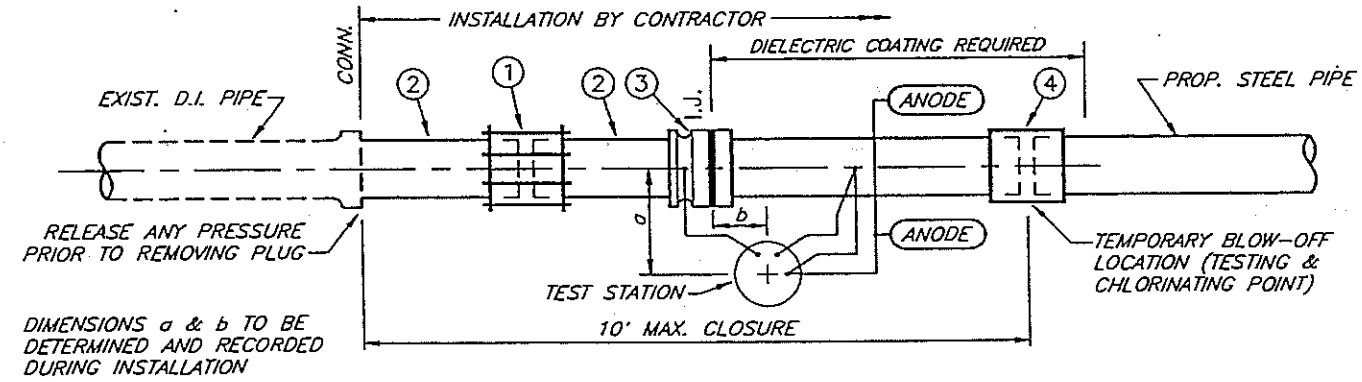

DETAIL 2 - CONNECTION TO EXISTING PUSH-ON BELL END

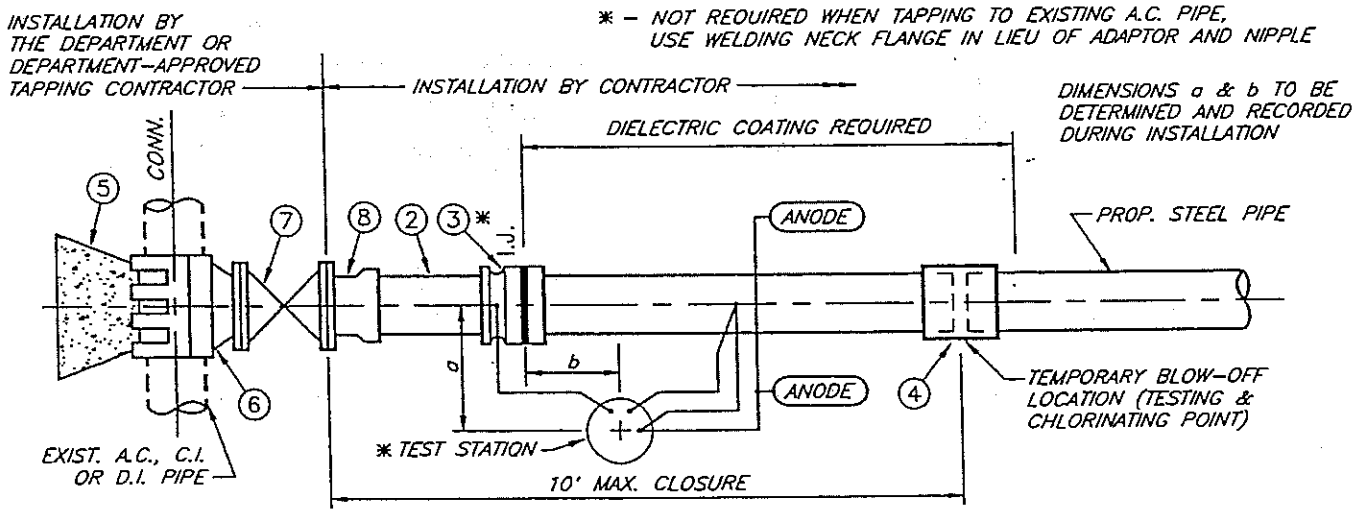

DETAIL 3 - WET-TAP CONNECTION TO EXISTING A.C., C.I. OR D.I. PIPE

1. CAST TRANS. MECH. COUPLING
2. D.I. R.G. NIPPLE
3. PRE-ASS'D INS. FLG. TYPE I-E
4. STEEL BUTTSTRAP
5. CONCRETE THRUST BLOCK
6. TAPPING SLEEVE
7. FLANGED GATE VALVE
8. D.I. R.G. FLANGE/BELL ADAPTOR

NOTE: SEE DRAWING NO.'S A9455-1 THRU A9455-4 FOR CATHODIC PROTECTION NOTES AND DETAILS.

STEEL PIPE CONNECTIONS TO EXISTING A.C., C.I., OR D.I. PIPE

A9453

REVISIONS				
NO.	DATE	INIT.		APP'D

DEPARTMENT OF WATER AND POWER
WATER SYSTEM — CITY OF LOS ANGELES

	NAME	DATE	APPROVED	
DESIGNED	L. NUNO	8-91	B. WEINSTEIN	JUNE '92
DRAWN	V. TOROMANIAN	12-91		
CHECKED	L. NUNO	12-91		

D101-11.DWG

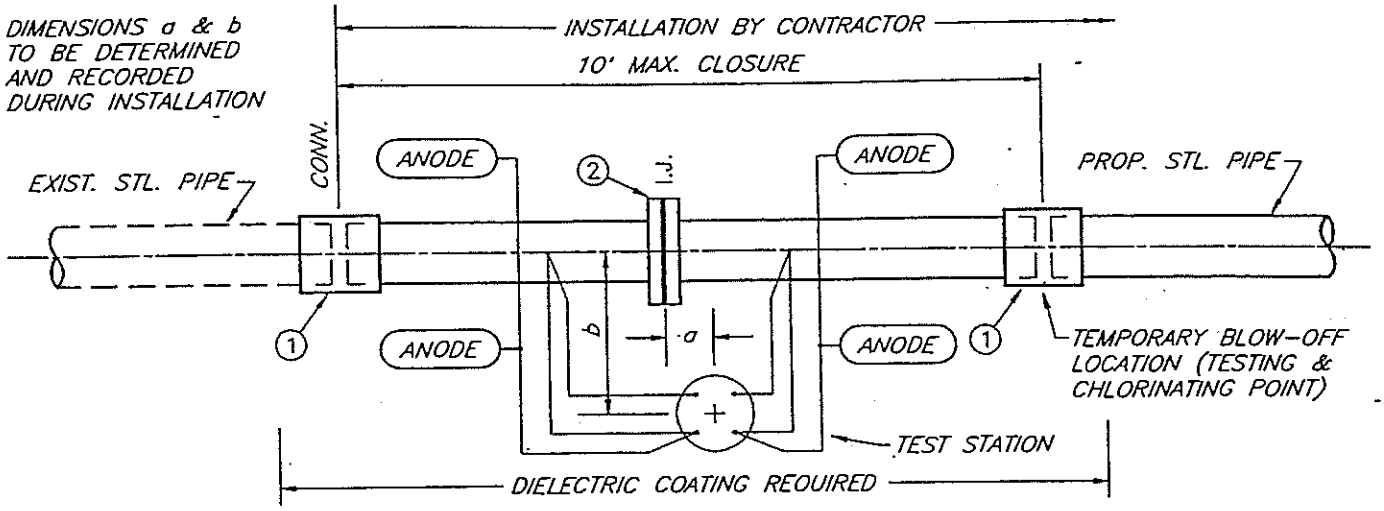

DETAIL 1 – CONNECTION TO EXISTING STEEL PIPE

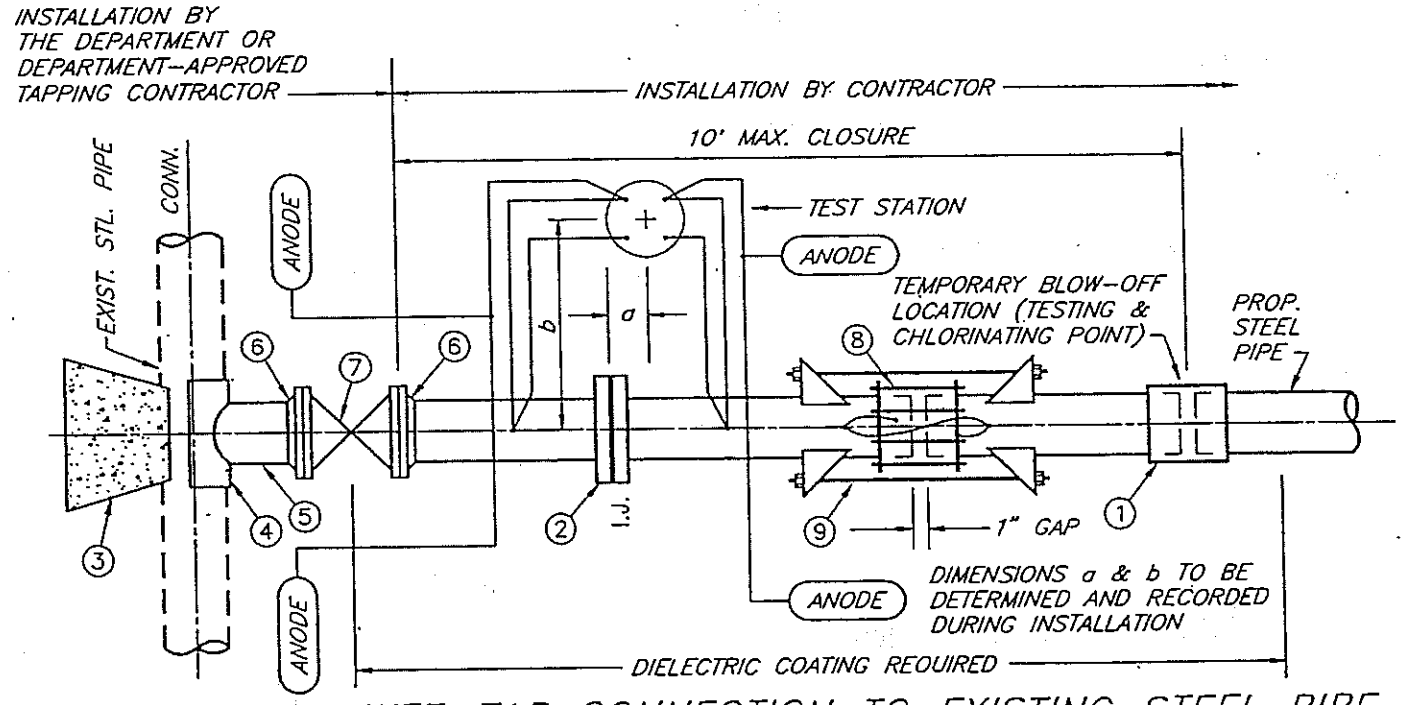

DETAIL 2 – WET-TAP CONNECTION TO EXISTING STEEL PIPE

1. STEEL BUTTSTRAP
2. PRE-ASS'D INS. FLG. TYPE II-D
3. CONCRETE THRUST BLOCK
4. STEEL WELDING PAD
5. STEEL NIPPLE
6. WELD NECK FLANGE
7. FLANGED GATE VALVE
8. STEEL MECHANICAL COUPLING (NON-INS.)
9. ANCHOR BOX ASSEMBLY

NOTE: SEE DRAWING NO.'S A9455-1 THRU A9455-4 FOR CATHODIC PROTECTION NOTES AND DETAILS.

STEEL PIPE CONNECTIONS TO EXISTING STEEL PIPE

A9454

REVISIONS				
NO.	DATE	INIT.		APP'D

DEPARTMENT OF WATER AND POWER
WATER SYSTEM — CITY OF LOS ANGELES

	NAME	DATE	APPROVED	
DESIGNED	L. NUNO	8-91	B. WEINSTEIN	JUNE '92
DRAWN	V. TOROMANIAN	12-91		
CHECKED	L. NUNO	12-91		

D101-12.DWG

1. All steel water mains shall be placed under a galvanic cathodic protection system installed and tested by a Corrosion Engineer registered by the State of California, a Corrosion Specialist certified by the National Association of Corrosion Engineers, or someone under the direct supervision of a Registered Corrosion Engineer.

2. Two-inch (2") and smaller service laterals connected to steel pipe shall be installed and coated as shown on Sheet 30.

3. The Contractor shall protect the cathodic protection system including, but not limited to, insulating joints, anodes, wire leads, and test stations.

4. Test stations shall be located, in order of preference, adjacent to fire hydrants, adjacent to line valves, and adjacent to insulating joints.

5. Test station locations shall be recorded.

6. Test station wire leads shall be properly identified using N, S, E, and W directions, and be capable of allowing current readings using a 0.01 ohm, 6 amp. capacity shunt installed on the terminal block.

7. Test station wire leads shall have a minimum of four feet (4') of excess wire measured from the gate cap.

8. Anodes shall be 32-lb. Dow Galvo Pack, or equal.

9. Anodes shall be installed in accordance with the following conditions:

   a. A minimum distance of two feet (2') clear from the water main.
   b. A minimum distance of five feet (5') clear from each other.
   c. Vertically or horizontally.
   d. On either or both sides of the water main.
   e. Watered prior to being covered with soil.
   f. Nested against, and covered with a minimum of six inches (6") of soil, and a minimum cover of three feet (3') from finished grade.

10. Bond wire shall be 8 gauge, THHN, 600V, blue solid.

11. Wire leads shall be 12 gauge, THHN, 600V, blue stranded.

12. All noninsulating mechanical couplings connecting steel pipe to steel pipe shall be bonded across and through.

13. Wires shall be connected to steel pipe walls using a thermite welding method.

14. Connection of two (2) wires shall be done by using solderless crimp connectors. Where three (3) or more wires are connected, a split bolt connector shall be used. A Direct Bury Splice Kit - 3MDBR or equal may be used for a three (3) or four (4) wire connection.

15. All wire splices shall be tightly wrapped with a minimum of four overlapping layers of electrical plastic tape under a waterproof electrical coating.

STEEL PIPE CORROSION MITIGATION NOTES AND DETAILS

REVISIONS				
NO.	DATE	INIT.		APP'D

DEPARTMENT OF WATER AND POWER
WATER SYSTEM — CITY OF LOS ANGELES

	NAME	DATE	APPROVED	
DESIGNED	C. HAMVAS	9-94	B. WEINSTEIN	OCTOBER '94
DRAWN	V. TOROMANIAN	9-94		
CHECKED	C. HAMVAS	9-94		

A9455-1

16. Wire leads shall be taped together every three feet (3') to form a wiring harness. The harness shall be strategically located to minimize possible future damage to the wire leads. Minimum depth must equal the pipe cover.

17. The joints of cement-mortar coated and enamel/dielectric undercoated steel main shall be coated with a dielectric coating under a minimum one-inch (1") thick cement-mortar coating.

18. The Contractor shall coat all bare portions of steel pipe and appurtenances with a dielectric coating.

19. The dielectric coating on welded joints shall overlap the original coating by a minimum of two inches (2") on each end.

20. Insulating joints shall have the dielectric coating extended a minimum of two (2) pipe diameters onto adjacent non-steel pipe.

21. Fittings that connect steel pipe to A.C. pipe shall be fully coated with a dielectric coating.

22. All field enameling or wrapping shall be tested by the Contractor using an electrical holiday detector in accordance with AWWA C203 Section 2.14.12 for enameling and AWWA C209 Section 4.4 for wax tape. Any flaws or holidays found shall be repaired by the Contractor in accordance with AWWA C203 Section 2.15 for enameling and AWWA C209 Section 3.4 for wax tape.

23. The cement-mortar coating reinforcing wire shall:

    a. Not come in contact with the steel pipe wall.
    b. Overlap the original cement-mortar coating a minimum of two inches (2") on each edge.

24. The cement-mortar coating on welded joints shall overlap the cement-mortar coating reinforcing wire by a minimum of two inches (2") on each end.

25. As an alternative, welded steel joints and mechanical couplings on welded steel pipe may be protected with "Raychem Heat Shrink Joint Protection Sleeve GAP 7" and "Raychem Thermofit Dresser Sleeve", respectively, or equal.

26. The following tests shall be performed and certified by the Corrosion Engineer:

    a. Test soil resistivity at 500 foot intervals, all street intersections and cul-de-sacs, and both sides of cut and fill areas.
    b. Test the cathodic protection system for pipe-to-soil values and current output at all cathodic protection stations, and submit a report including the data to the Department.
    c. Test the cathodic protection system to ensure a minimum theoretical life of 75 years (add as many anodes as necessary to conform).
    d. Test all insulating joints to ensure electrical isolation.
    e. Test all service laterals to ensure no shorts are present.

27. The Corrosion Engineer shall prepare and submit for Department approval an accurate as-constructed record of the cathodic protection system installed. As-constructed record shall have all test stations and anodes located and referenced to the centerline of the main and the insulating joints.

STEEL PIPE CORROSION MITIGATION NOTES AND DETAILS (CONT'D)

A9455-2

REVISIONS				
NO.	DATE	INIT.		APP'D

DEPARTMENT OF WATER AND POWER
WATER SYSTEM — CITY OF LOS ANGELES

	NAME	DATE	APPROVED	
DESIGNED	C. HAMVAS	9-94	B. WEINSTEIN	OCTOBER '94
DRAWN	V. TOROMANIAN	9-94		
CHECKED	C. HAMVAS	9-94		

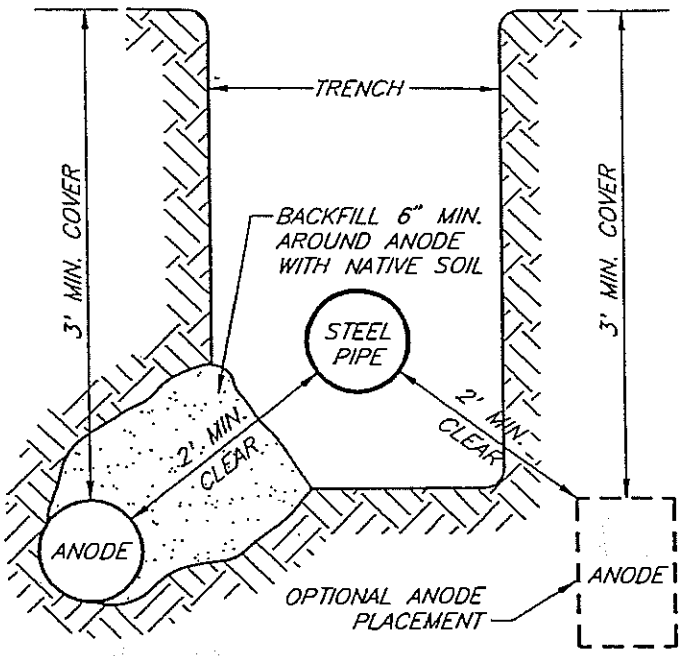

ANODE PLACEMENT PROFILE

DETAIL NO. 1

NO SCALE

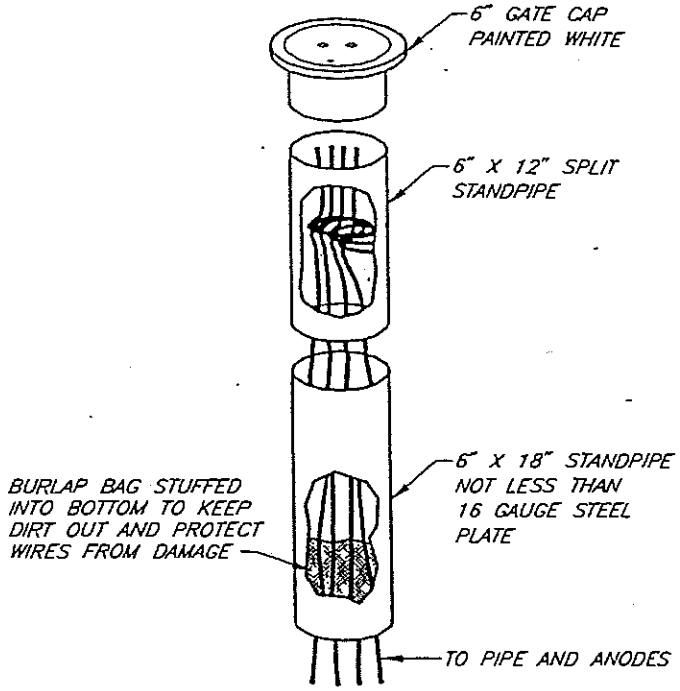

TEST STATION ASSEMBLY

DETAIL NO. 2

NO SCALE

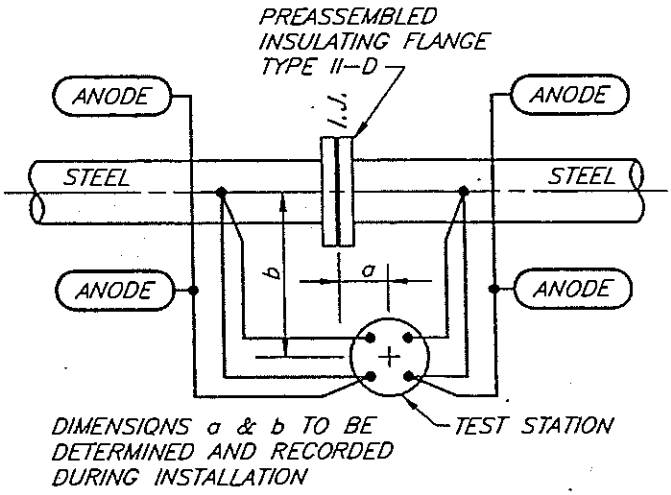

STEEL PIPE – STEEL PIPE
ANODE AND TEST STATION SCHEMATIC

DETAIL NO. 3

NO SCALE

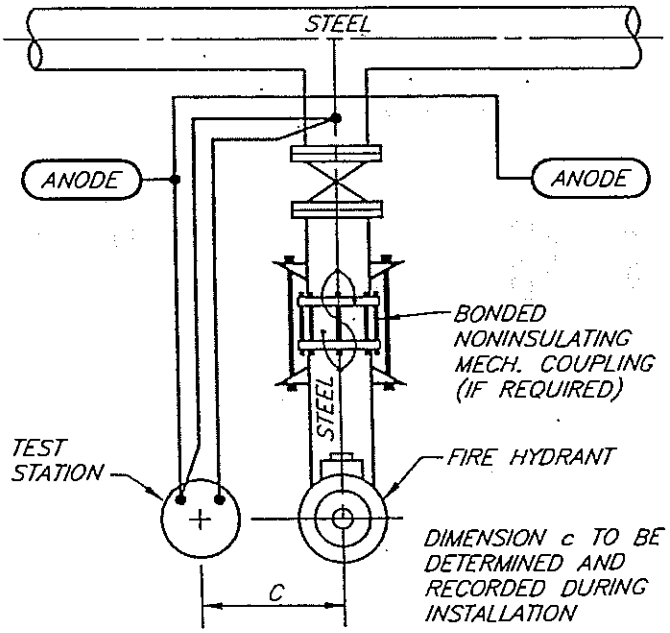

FIRE HYDRANT
ANODE AND TEST STATION SCHEMATIC

DETAIL NO. 4

NO SCALE

STEEL PIPE CORROSION MITIGATION NOTES AND DETAILS (CONT'D)

A9455-3

REVISIONS				
NO.	DATE	INIT.		APP'D

DEPARTMENT OF WATER AND POWER
WATER SYSTEM — CITY OF LOS ANGELES

	NAME	DATE	APPROVED
DESIGNED	L. NUNO	2-92	B. WEINSTEIN JUNE '92
DRAWN	V. TOROMANIAN	2-92	
CHECKED	L. NUNO	2-92	

D101-13C.DWG

SHEET 13C

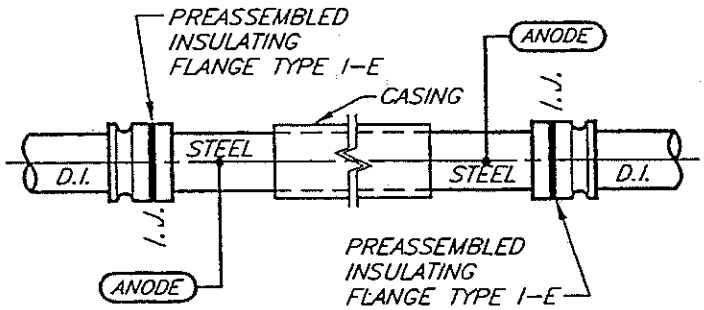

D.I. PIPE–STEEL PIPE IN CASING–D.I PIPE
DIRECT CONNECTION SCHEMATIC

DETAIL NO. 5

NO SCALE

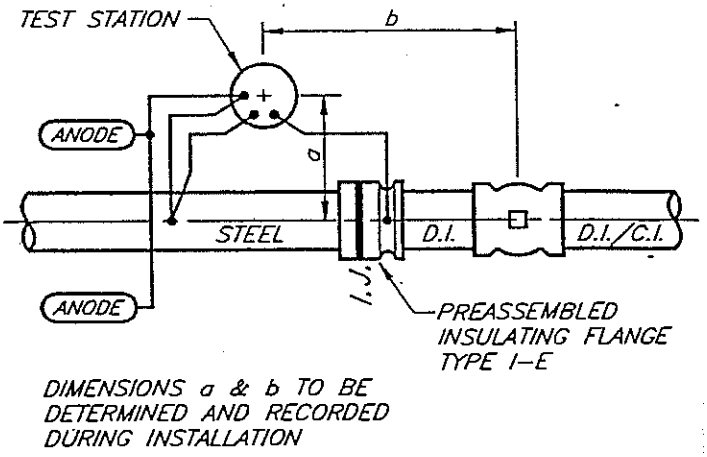

STEEL PIPE – DUCTILE IRON PIPE
ANODE AND TEST STATION SCHEMATIC

DETAIL NO. 6

NO SCALE

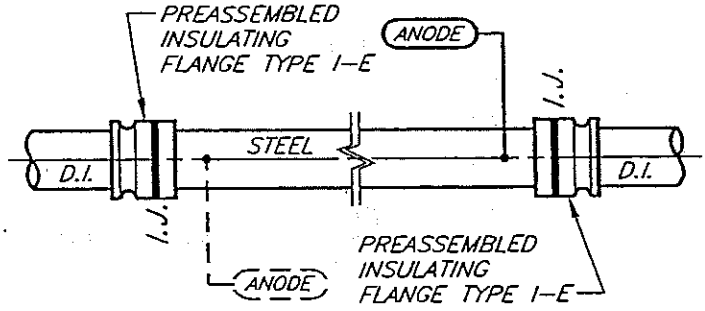

DIRECT CONNECTION
1 ANODE < 50'
2 ANODES 50' ≤ 100'

D.I. PIPE – STEEL PIPE – D.I. PIPE
DIRECT CONNECTION SCHEMATIC

DETAIL NO. 7

NO SCALE

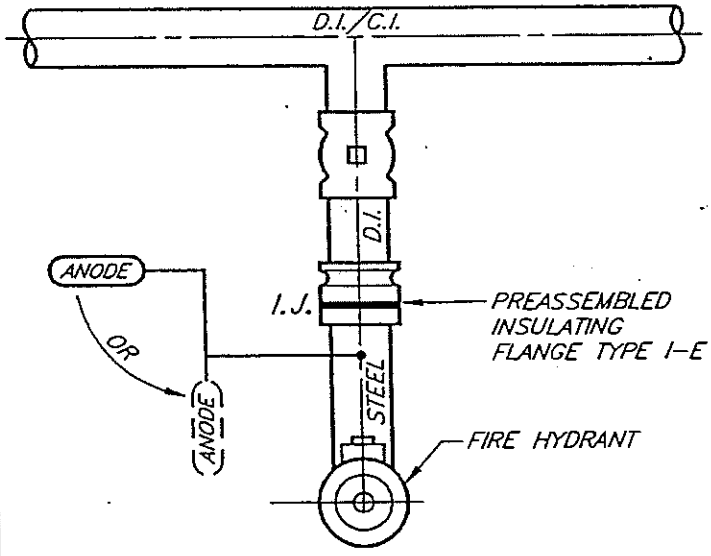

DIRECT CONNECTION
1 ANODE < 50'
2 ANODES 50' ≤ 100'

STEEL F.H. LATERAL – D.I. PIPE
DIRECT CONNECTION SCHEMATIC

DETAIL NO. 8

NO SCALE

STEEL PIPE CORROSION MITIGATION NOTES AND DETAILS (CONT'D)

A9455-4

REVISIONS				
NO.	DATE	INIT.		APP'D

DEPARTMENT OF WATER AND POWER
WATER SYSTEM — CITY OF LOS ANGELES

	NAME	DATE	APPROVED	
DESIGNED	L. NUNO	2-92	B. WEINSTEIN	JUNE '92
DRAWN	V. TOROMANIAN	2-92		
CHECKED	L. NUNO	2-92		

D101-130.DWG

SHEET 13D

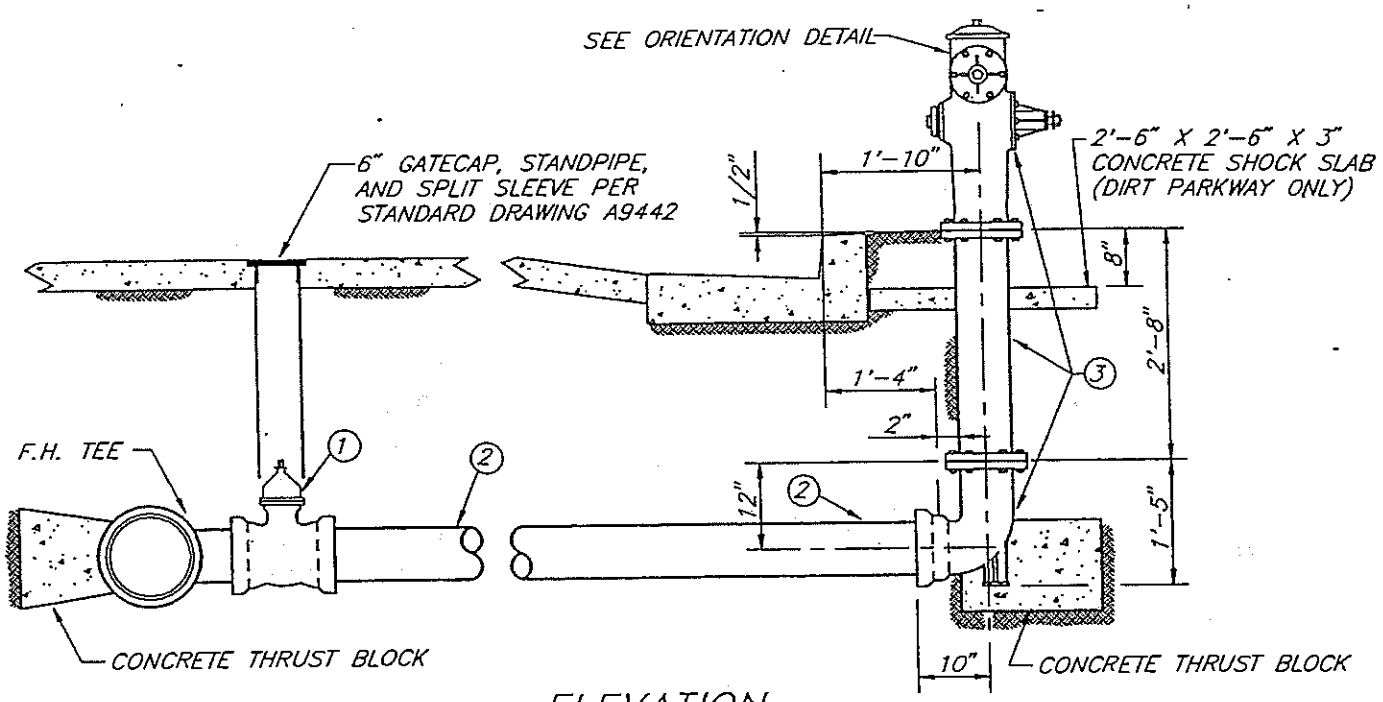

ELEVATION

NOTES:

1. THIS FIRE HYDRANT INSTALLATION IS GENERALLY USED WHEN CONNECTING TO A PROPOSED DUCTILE IRON MAIN EXTENSION.
2. ALL PUSH-ON JOINTS SHALL BE RESTRAINED WITH JOINT-LOCK GASKETS.
*3. LENGTH OF LATERAL IS DEFINED AS THE DISTANCE MEASURED ALONG THE LATERAL FROM THE MAIN TO THE CURB FACE OR TO THE FIRE HYDRANT IN THE ABSENCE OF CURB.
4. SEE STANDARD DRAWINGS A9459 AND A9460 FOR PLACEMENT OF FIRE HYDRANTS IN THE ABSENCE OF A CURB.
5. SEE STANDARD DRAWING A9461 FOR PLACEMENT OF FIRE HYDRANTS IN THE ABSENCE OF A LEVEL PAD.

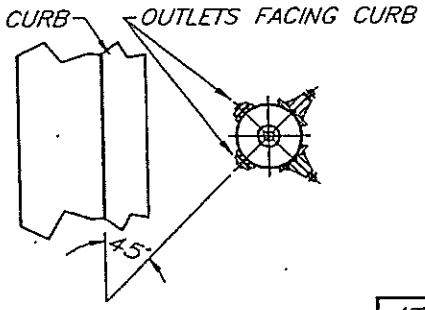

ORIENTATION DETAIL

ITEM	QTY.	MATERIAL DESCRIPTION
1	1	6" X 200# C.I. R.G. GATE VALVE
2	*	6" X 0.31" D.I. R.G. PIPE AWWA
3	1	2-1/2" X 4" (OR 4" X 4") DOUBLE-OUTLET F.H. ASSEMBLY

DOUBLE-OUTLET FIRE HYDRANT INSTALLATION (D.I. PIPE)

A9456-1

REVISIONS				APP'D
NO.	DATE	INIT.		

DEPARTMENT OF WATER AND POWER
WATER SYSTEM — CITY OF LOS ANGELES

	NAME	DATE	APPROVED	
DESIGNED	D. S. WALL	4-92	B. WEINSTEIN	JUNE '92
DRAWN	D. S. WALL	4-92		
CHECKED	C. HAMVAS	4-92		

D101-14A.DWG

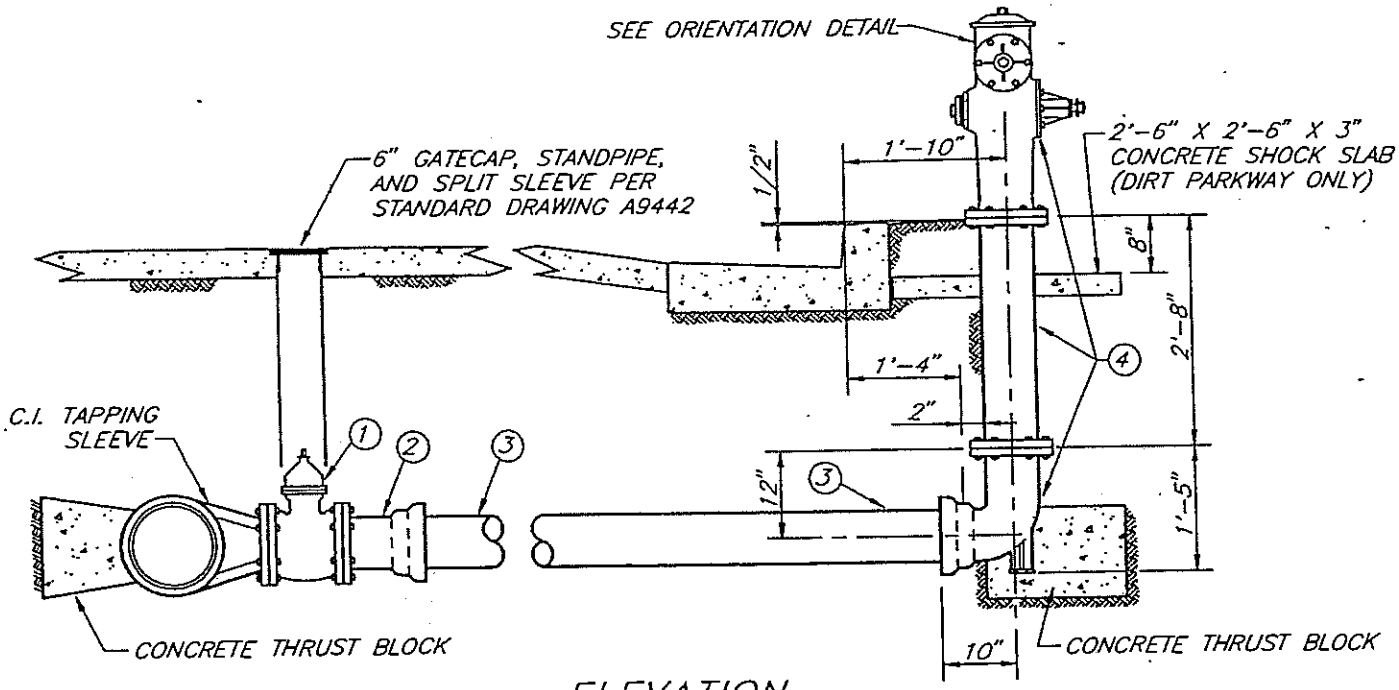

ELEVATION

NOTES:

1. THIS FIRE HYDRANT INSTALLATION IS GENERALLY USED WHEN CONNECTING TO AN EXISTING D.I./C.I. WATER MAIN.
2. ALL PUSH-ON JOINTS SHALL BE RESTRAINED WITH JOINT-LOCK GASKETS.
3. * LENGTH OF LATERAL IS DEFINED AS THE DISTANCE MEASURED ALONG THE LATERAL FROM THE MAIN TO THE CURB FACE OR TO THE FIRE HYDRANT IN THE ABSENCE OF CURB.
4. SEE STANDARD DRAWINGS A9459 AND A9460 FOR PLACEMENT OF FIRE HYDRANTS IN THE ABSENCE OF A CURB.
5. SEE STANDARD DRAWING A9461 FOR PLACEMENT OF FIRE HYDRANTS IN THE ABSENCE OF A LEVEL PAD.

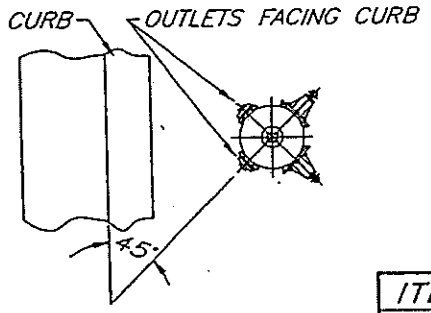

ORIENTATION DETAIL

ITEM	QTY.	MATERIAL DESCRIPTION
1	1	6" X 200# C.I. FLANGED GATE VALVE
2	1	6" D.I. R.G. FLANGE/BELL ADAPTOR AWWA
3	*	6" X 0.31" D.I. R.G. PIPE AWWA
4	1	2-1/2" X 4" (OR 4" X 4") DOUBLE-OUTLET F.H. ASSEMBLY

DOUBLE-OUTLET FIRE HYDRANT INSTALLATION (D.I., C.I. PIPE)

A9456-2

REVISIONS				
NO.	DATE	INIT.		APP'D

DEPARTMENT OF WATER AND POWER
WATER SYSTEM — CITY OF LOS ANGELES

	NAME	DATE	APPROVED	
DESIGNED	D. S. WALL	4-92	B. WEINSTEIN	JUNE '92
DRAWN	D. S. WALL	4-92		
CHECKED	C. HAMVAS	4-92		

D101-14B.DWG

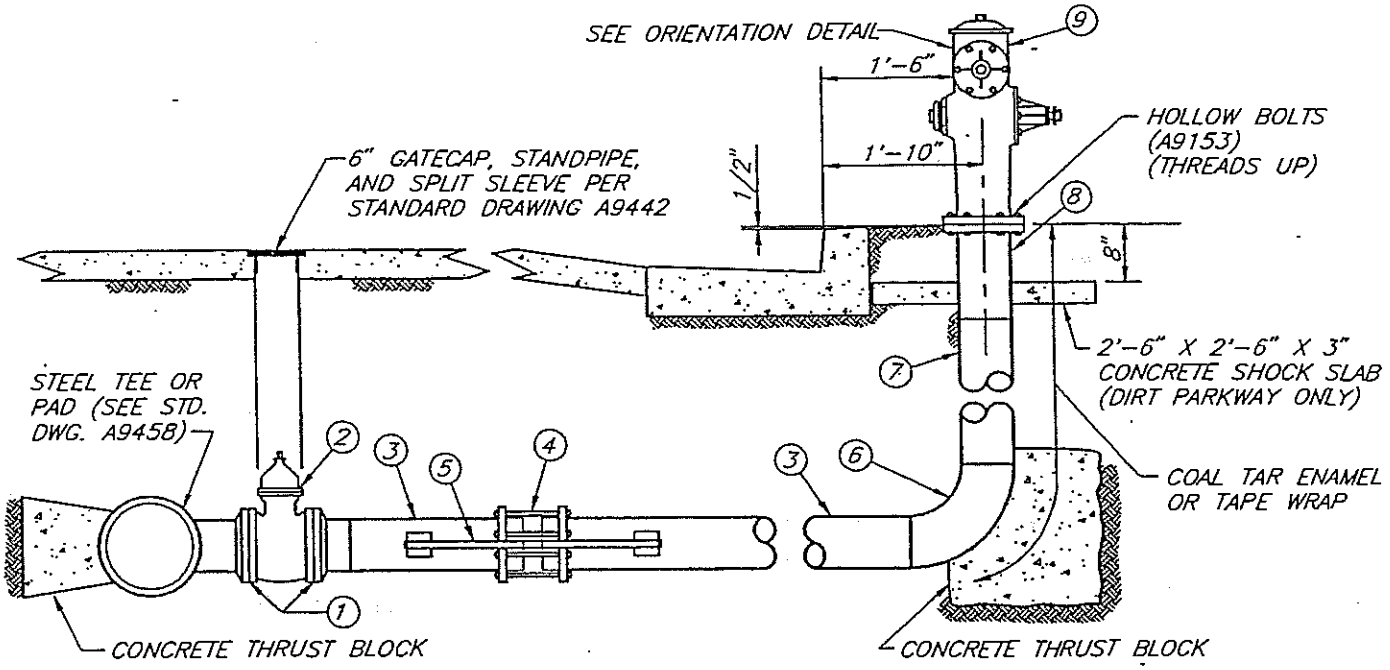

ELEVATION

NOTES:

1. THIS FIRE HYDRANT INSTALLATION IS GENERALLY USED WHEN CONNECTING TO AN EXISTING OR PROPOSED STEEL WATER MAIN WITH A MAXIMUM STATIC PRESSURE OF 200 PSI OR LESS.
2. PROVIDE CATHODIC PROTECTION IN ACCORDANCE WITH LATEST DWPWS STANDARDS.
*3. LENGTH OF LATERAL IS DEFINED AS THE DISTANCE MEASURED ALONG THE LATERAL FROM THE MAIN TO THE CURB FACE OR TO THE FIRE HYDRANT IN THE ABSENCE OF CURB.
4. SEE STANDARD DRAWINGS A9459 AND A9460 FOR PLACEMENT OF FIRE HYDRANTS IN THE ABSENCE OF A CURB.
5. SEE STANDARD DRAWING A9461 FOR PLACEMENT OF FIRE HYDRANTS IN THE ABSENCE OF A LEVEL PAD.

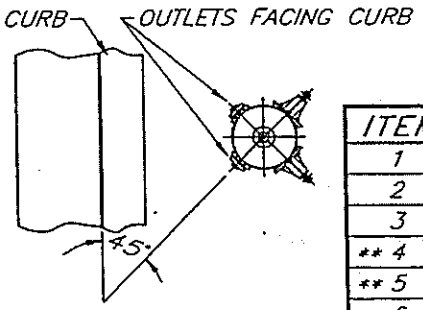

ORIENTATION DETAIL

ITEM	QTY.	MATERIAL DESCRIPTION
1	2	6" X 150# STEEL WELD NECK FLANGE
2	1	6" X 200# C.I. FLANGED GATE VALVE
3	*	6-5/8" O.D. X 1/4" EN. UC., C.L. & C., S.J. WLD STL. PIPE
** 4	1	6" STEEL MECHANICAL COUPLING (NON-INSULATING)
** 5	1	ANCHOR BOX ASSEMBLY PER STD. DWG. A9194
6	1	6" X 90° LONG RADIUS STEEL WELD ELBOW
7	3'±	6-5/8" O.D. X 1/4" EN. UC., C.L. & C., S.J., WLD STL. PIPE
8	1	6" F.H. STEEL WELD NECK FLANGE (6 11/16" HOLES EQUALLY SPACED ON 9.375" B.C.)
9	1	2-1/2" X 4" (OR 4" X 4") DOUBLE-OUTLET F.H. TOP

** REQUIRED ONLY IF LENGTH OF LATERAL EXCEEDS 10'.

DOUBLE-OUTLET FIRE HYDRANT INSTALLATION (STEEL PIPE)

A9456-3

REVISIONS				
NO.	DATE	INIT.		APP'D

DEPARTMENT OF WATER AND POWER
WATER SYSTEM — CITY OF LOS ANGELES

	NAME	DATE	APPROVED	
DESIGNED	D. S. WALL	4-92	B. WEINSTEIN	JUNE '92
DRAWN	D. S. WALL	4-92		
CHECKED	C. HAMVAS	4-92		

D101-14C.DWG

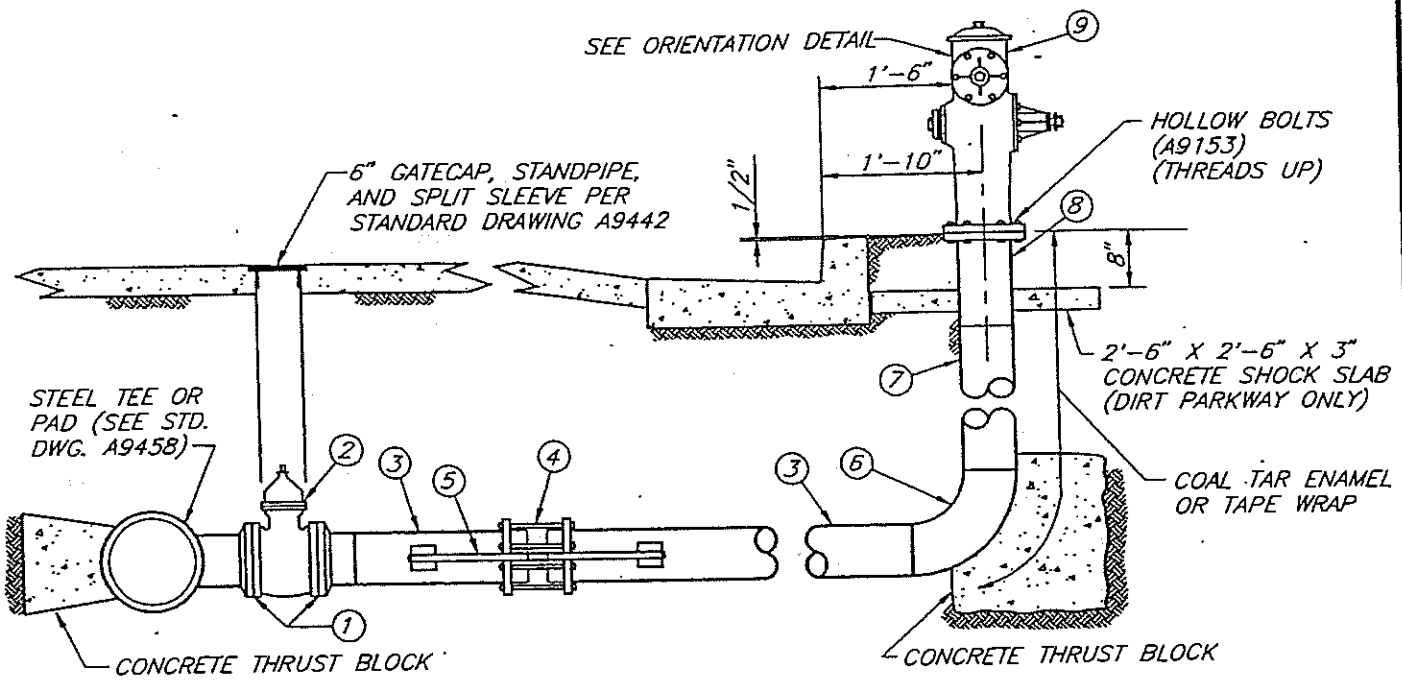

ELEVATION

NOTES:

1. THIS FIRE HYDRANT INSTALLATION IS GENERALLY USED WHEN CONNECTING TO AN EXISTING OR PROPOSED STEEL WATER MAIN WITH A MAXIMUM STATIC PRESSURE GREATER THAN 200 PSI BUT EQUAL TO OR LESS THAN 210 PSI.
2. PROVIDE CATHODIC PROTECTION IN ACCORDANCE WITH LATEST DWPWS STANDARDS.
3. * LENGTH OF LATERAL IS DEFINED AS THE DISTANCE MEASURED ALONG THE LATERAL FROM THE MAIN TO THE CURB FACE OR TO THE FIRE HYDRANT IN THE ABSENCE OF CURB.
4. SEE STANDARD DRAWINGS A9459 AND A9460 FOR PLACEMENT OF FIRE HYDRANTS IN THE ABSENCE OF A CURB.
5. SEE STANDARD DRAWING A9461 FOR PLACEMENT OF FIRE HYDRANTS IN THE ABSENCE OF A LEVEL PAD.

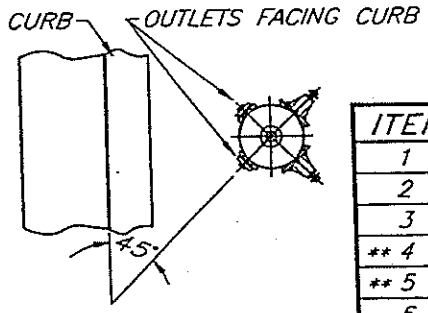

ORIENTATION DETAIL

ITEM	QTY.	MATERIAL DESCRIPTION
1	2	6" X 300# STEEL WELD NECK FLANGE
2	1	6" X 250# C.I. FLANGED GATE VALVE
3	*	6-5/8" O.D. X 1/4" EN. UC., C.L. & C., S.J. WLD STL. PIPE
** 4	1	6" STEEL MECHANICAL COUPLING (NON-INSULATING)
** 5	1	ANCHOR BOX ASSEMBLY PER STD. DWG. A9194
6	1	6" X 90° LONG RADIUS STEEL WELD ELBOW
7	3'±	6-5/8" O.D. X 1/4" EN. UC., C.L. & C., S.J., WLD STL. PIPE
8	1	6" F.H. STEEL WELD NECK FLANGE (6 11/16" HOLES EQUALLY SPACED ON 9.375" B.C.)
9	1	2-1/2" X 4" (OR 4" X 4") DOUBLE-OUTLET F.H. TOP

** REQUIRED ONLY IF LENGTH OF LATERAL EXCEEDS 10'.

DOUBLE-OUTLET FIRE HYDRANT INSTALLATION (STEEL PIPE)

A9456-4

REVISIONS				APP'D
NO.	DATE	INIT.		

DEPARTMENT OF WATER AND POWER
WATER SYSTEM — CITY OF LOS ANGELES

	NAME	DATE	APPROVED	
DESIGNED	D. S. WALL	4-92	B. WEINSTEIN	JUNE '92
DRAWN	D. S. WALL	4-92		
CHECKED	C. HAMVAS	4-92		

D101-14D.DWG

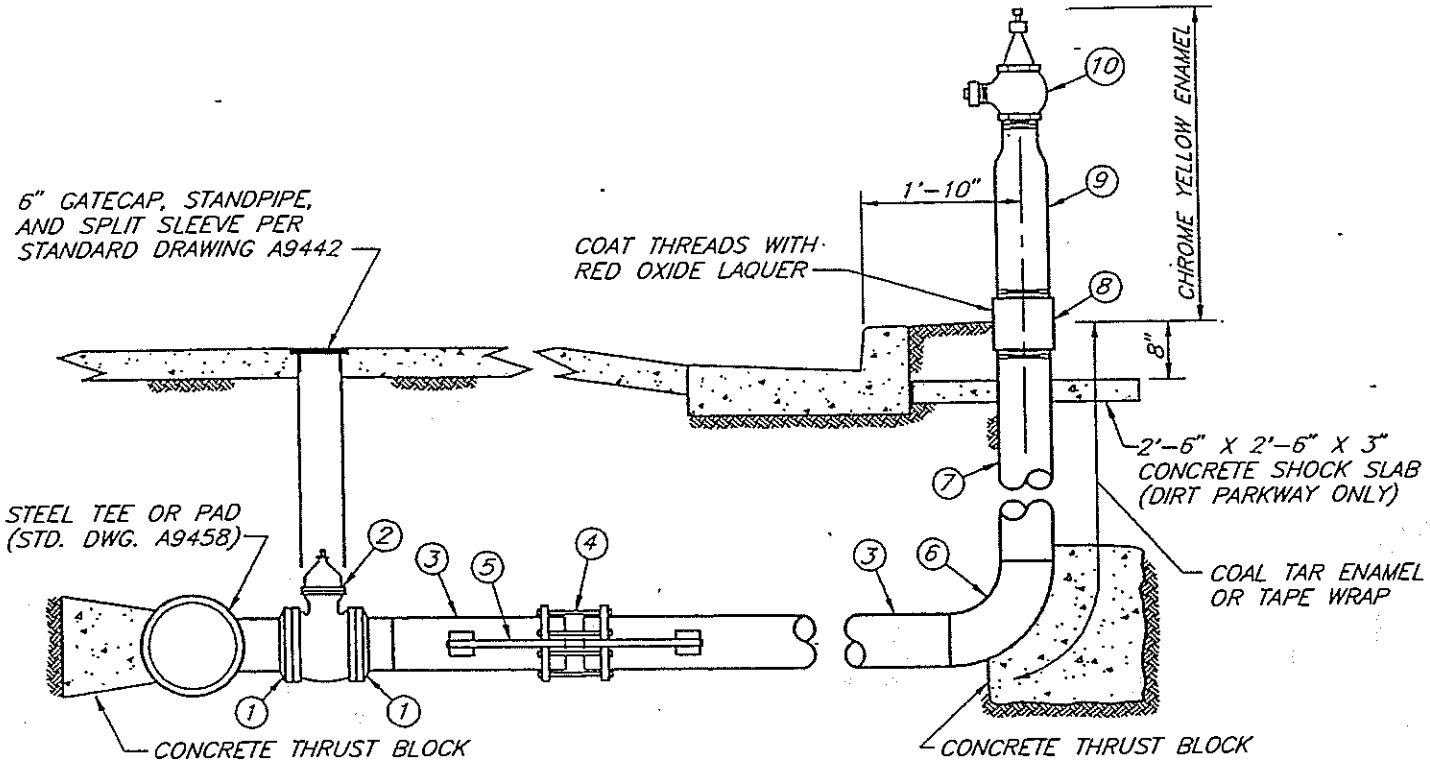

ELEVATION

NOTES:

1. THIS FIRE HYDRANT INSTALLATION IS GENERALLY USED WHEN CONNECTING TO AN EXISTING OR PROPOSED STEEL WATER MAIN WITH A MAXIMUM STATIC PRESSURE GREATER THAN 210 PSI BUT EQUAL TO OR LESS THAN 250 PSI.
2. PROVIDE CATHODIC PROTECTION IN ACCORDANCE WITH LATEST DWPWS STANDARDS.
*3. LENGTH OF LATERAL IS DEFINED AS THE DISTANCE MEASURED ALONG THE LATERAL FROM THE MAIN TO THE CURB FACE OR TO THE FIRE HYDRANT IN THE ABSENCE OF CURB.
4. SEE STANDARD DRAWINGS A9459 AND A9460 FOR PLACEMENT OF FIRE HYDRANTS IN THE ABSENCE OF A CURB.
5. SEE STANDARD DRAWING A9461 FOR PLACEMENT OF FIRE HYDRANTS IN THE ABSENCE OF A LEVEL PAD.

ITEM	QTY.	MATERIAL DESCRIPTION
1	2	6" X 300# STEEL WELD NECK FLANGE
2	1	6" X 250# C.I. FLANGED GATE VALVE
3	*	6-5/8" O.D. X 1/4" EN. UC., C.L. & C., S.J. WELDED STEEL PIPE
** 4	1	6" STEEL MECHANICAL COUPLING (NON-INSULATING)
** 5	1	ANCHOR BOX ASSEMBLY PER STD. DWG. A9194
6	1	6" X 90° LONG RADIUS STEEL WELD ELBOW
7	1	6-5/8" O.D. X 1/4" X 38" EN. UC., C.L. & C., STEEL WELD THREADED NIPPLE
8	1	6" STANDARD GALVINIZED STEEL COUPLING
9	1	6" X 4" X 24" STEEL SWAGED NIPPLE
10	1	4" X 2-1/2" FIRE HYDRANT ANGLE VALVE

** REQUIRED ONLY IF LENGTH OF LATERAL EXCEEDS 10'.

2-1/2" BUILT-UP FIRE HYDRANT INSTALLATION

A9457-1

REVISIONS				
NO.	DATE	INIT.		APP'D

DEPARTMENT OF WATER AND POWER
WATER SYSTEM — CITY OF LOS ANGELES

	NAME	DATE	APPROVED	
DESIGNED	D. S. WALL	4-92	B. WEINSTEIN	JUNE '92
DRAWN	D. S. WALL	4-92		
CHECKED	C. HAMVAS	4-92		

D101-15A.DWG

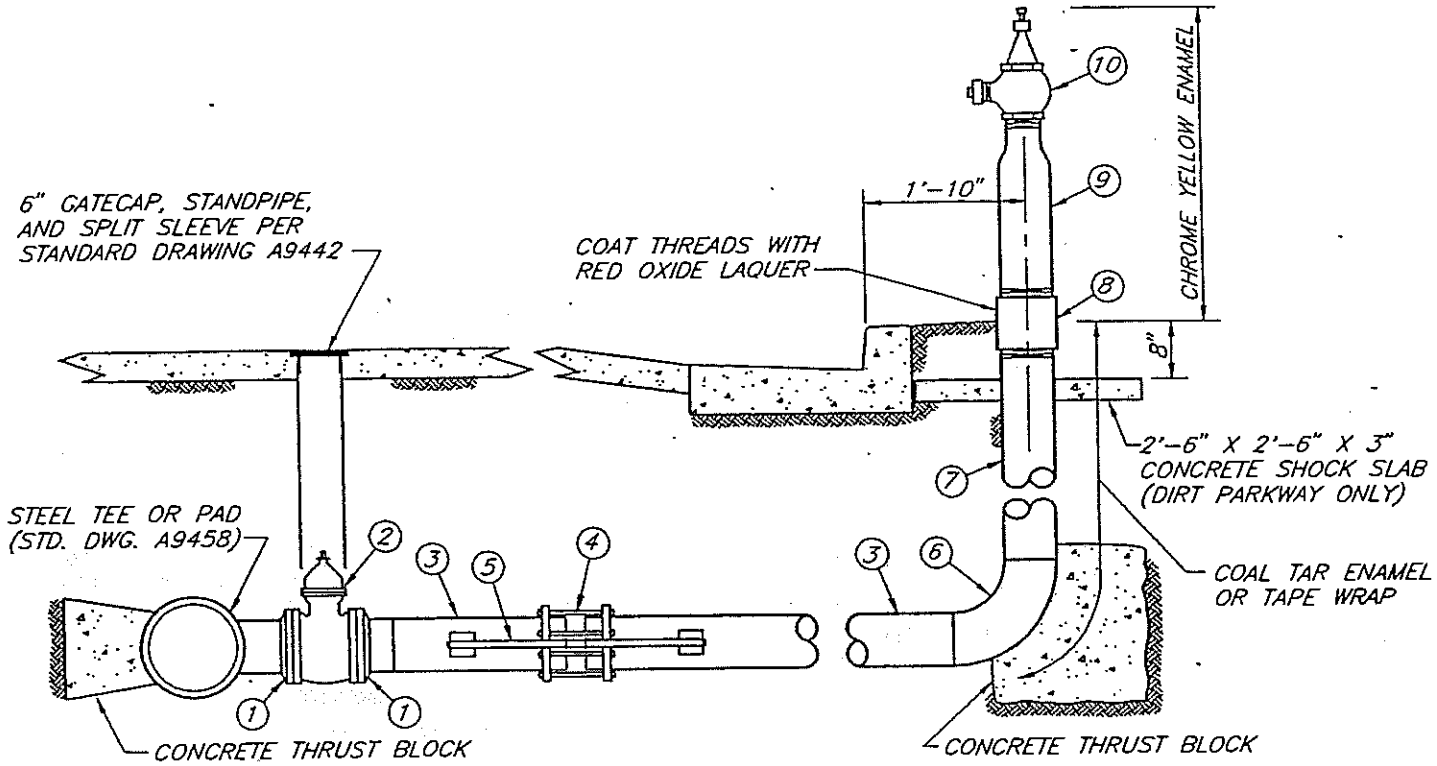

ELEVATION

NOTES:

1. THIS FIRE HYDRANT INSTALLATION IS GENERALLY USED WHEN CONNECTING TO AN EXISTING OR PROPOSED STEEL WATER MAIN WITH A MAXIMUM STATIC PRESSURE GREATER THAN 250 PSI.
2. PROVIDE CATHODIC PROTECTION IN ACCORDANCE WITH LATEST DWPWS STANDARDS.
3. * LENGTH OF LATERAL IS DEFINED AS THE DISTANCE MEASURED ALONG THE LATERAL FROM THE MAIN TO THE CURB FACE OR TO THE FIRE HYDRANT IN THE ABSENCE OF CURB.
4. SEE STANDARD DRAWINGS A9459 AND A9460 FOR PLACEMENT OF FIRE HYDRANTS IN THE ABSENCE OF A CURB.
5. SEE STANDARD DRAWING A9461 FOR PLACEMENT OF FIRE HYDRANTS IN THE ABSENCE OF A LEVEL PAD.

ITEM	QTY.	MATERIAL DESCRIPTION
1	2	6" X 300# STEEL WELD NECK FLANGE
2	1	6" X 350# C.I. FLANGED GATE VALVE
3	*	6-5/8" O.D. X 1/4" EN. UC., C.L. & C., S.J. WELDED STEEL PIPE
** 4	1	6" STEEL MECHANICAL COUPLING (NON-INSULATING)
** 5	1	ANCHOR BOX ASSEMBLY PER STD. DWG. A9194
6	1	6" X 90° LONG RADIUS STEEL WELD ELBOW
7	1	6-5/8" O.D. X 1/4" X 38" EN. UC., C.L. & C., STEEL WELD THREADED NIPPLE
8	1	6" STANDARD GALVINIZED STEEL COUPLING
9	1	6" X 4" X 24" STEEL SWAGED NIPPLE
10	1	4" X 2-1/2" FIRE HYDRANT ANGLE VALVE

** REQUIRED ONLY IF LENGTH OF LATERAL EXCEEDS 10'.

2-1/2" BUILT-UP FIRE HYDRANT INSTALLATION

A9457-2

REVISIONS				
NO.	DATE	INIT.		APP'D

DEPARTMENT OF WATER AND POWER
WATER SYSTEM — CITY OF LOS ANGELES

	NAME	DATE	APPROVED	
DESIGNED	D. S. WALL	4-92	B. WEINSTEIN	JUNE '92
DRAWN	D. S. WALL	4-92		
CHECKED	C. HAMVAS	4-92		

D101-158.DWG

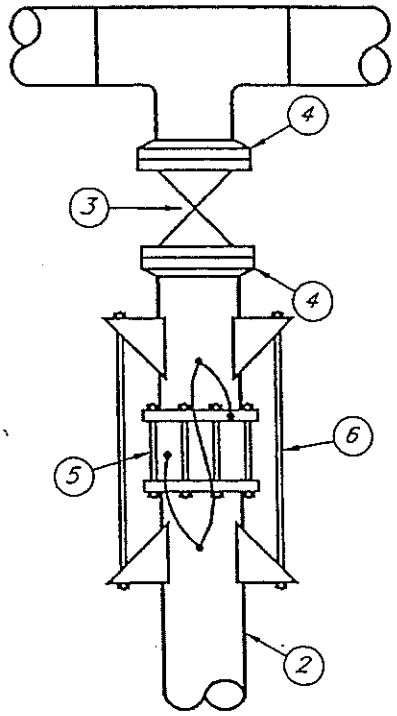

ALL MAIN SIZES

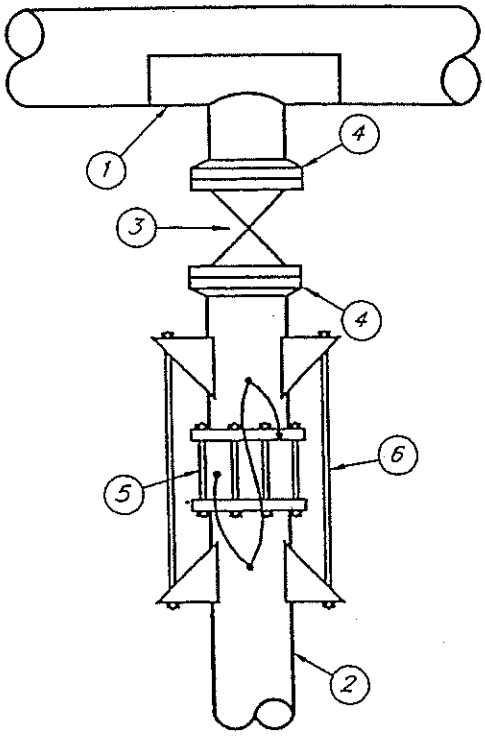

8" MAIN OR LARGER

ITEM	QTY.	MATERIAL DESCRIPTION
1	1	12" X 12" WELD PAD
2	–	6-5/8" O.D. X 1/4" EN. UC., C.L. & C., S.J., WLD STL. PIPE
3	1	6" C.I. FLANGED GATE VALVE
4	2	6" STEEL WELD NECK FLANGE
*5	1	6" STEEL MECHANICAL COUPLING (NON-INSULATING)
*6	1	ANCHOR BOX ASSEMBLY PER STD. DWG. A9194

* REQUIRED ONLY IF LENGTH OF LATERAL EXCEEDS 10'.

FIRE HYDRANT CONNECTION TO STEEL PIPE

A9458

REVISIONS				
NO.	DATE	INIT.		APP'D

DEPARTMENT OF WATER AND POWER
WATER SYSTEM — CITY OF LOS ANGELES

	NAME	DATE	APPROVED	
DESIGNED	D. S. WALL	4-92	B. WEINSTEIN	JUNE '92
DRAWN	D. S. WALL	4-92		
CHECKED	C. HAMVAS	4-92		

D101-16.DWG

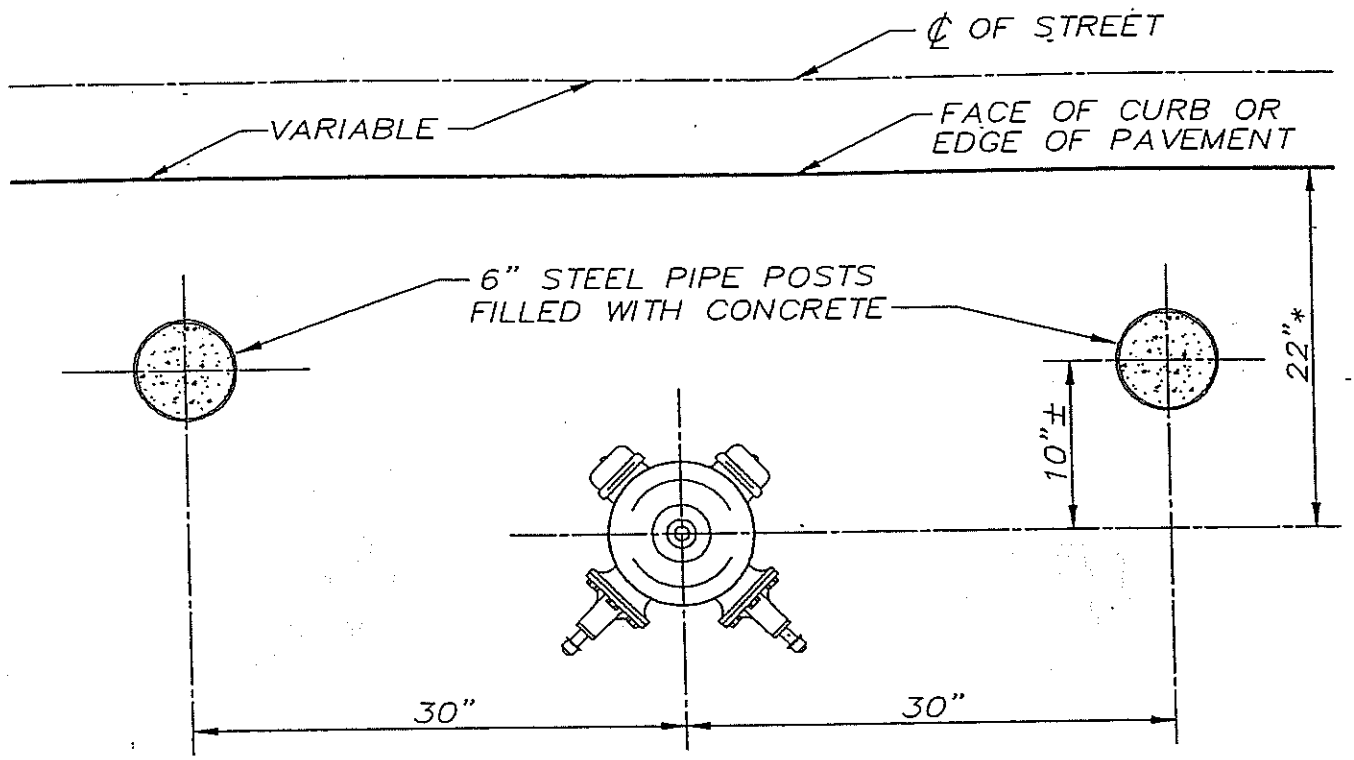

PLAN
N.T.S.

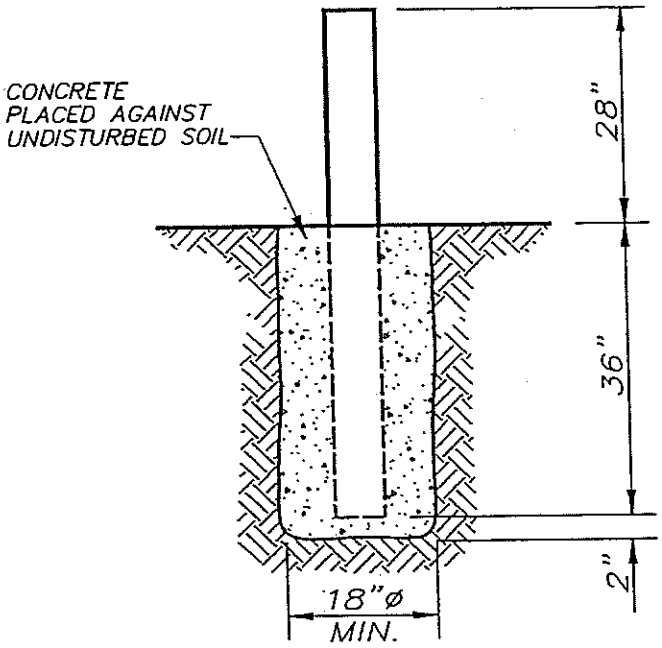

POST INSTALLATION
N.T.S.

NOTES:

1. PIPE SHALL CONFORM TO ASTM A 53, TYPE E, GRADE B, BLACK, SCHEDULE 40, PLAIN END.
2. APPLY A MINIMUM OF TWO COATS EACH OF RED OXIDE PRIMER AND CHROME YELLOW ENAMEL PAINT (FEDERAL SPEC. TT-C595, COLOR NO. 13538).
3. CONCRETE SHALL BE CLASS 500-C-2500 IN ACCORDANCE WITH "STANDARD SPECIFICATIONS FOR PUBLIC WORKS CONSTRUCTION" LATEST EDITION, SUBSECTION 201-1.1.2.

* 4. DISTANCE OF FIRE HYDRANT FROM FACE OF CURB OR EDGE OF PAVEMENT MAY BE GREATER DUE TO UNUSUAL CONDITIONS.

2-POST FIRE HYDRANT GUARD

A9459

REVISIONS				
NO.	DATE	INIT.		APP'D

DEPARTMENT OF WATER AND POWER
WATER SYSTEM — CITY OF LOS ANGELES

	NAME	DATE	APPROVED	
DESIGNED	L. NUNO	10-91	B. WEINSTEIN	JUNE '92
DRAWN	V. TOROMANIAN	10-91		
CHECKED	L. NUNO	10-91		

D101-17.DWG

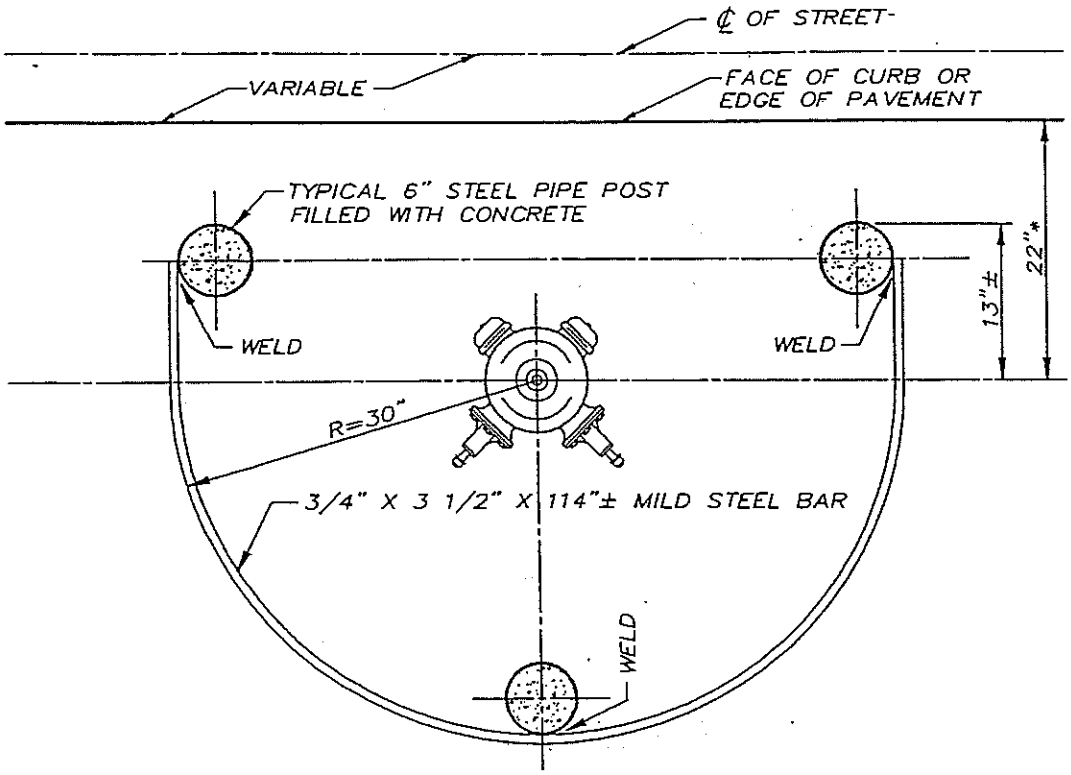

PLAN
N.T.S.

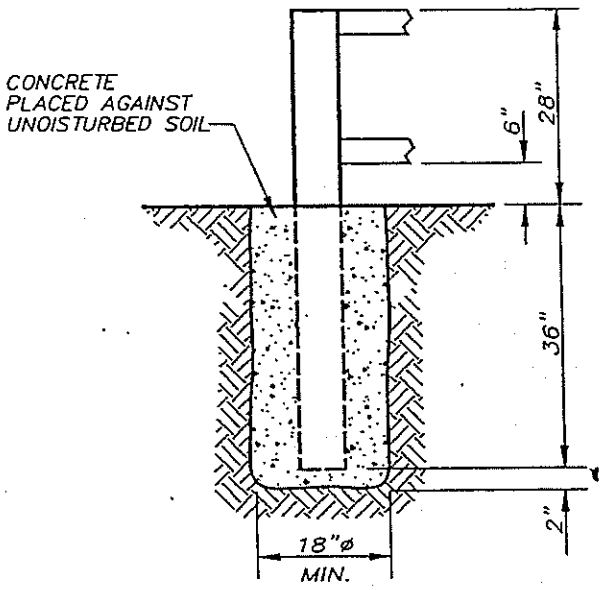

POST INSTALLATION
N.T.S.

NOTES:

1. PIPE SHALL CONFORM TO ASTM A 53, TYPE E, GRADE B, BLACK, SCHEDULE 40, PLAIN END.
2. APPLY A MINIMUM OF TWO COATS EACH OF RED OXIDE PRIMER AND CHROME YELLOW ENAMEL PAINT (FEDERAL SPEC. TT-C595, COLOR NO. 13538).
3. CONCRETE SHALL BE CLASS 500-C-2500 IN ACCORDANCE WITH "STANDARD SPECIFICATIONS FOR PUBLIC WORKS CONSTRUCTION" LATEST EDITION, SUBSECTION 201-1.1.2.
4. * DISTANCE OF FIRE HYDRANT FROM FACE OF CURB OR EDGE OF PAVEMENT MAY BE GREATER DUE TO UNUSUAL CONDITIONS.

3-POST FIRE HYDRANT GUARD

A9460

REVISIONS				
NO.	DATE	INIT.		APP'D

DEPARTMENT OF WATER AND POWER
WATER SYSTEM — CITY OF LOS ANGELES

	NAME	DATE	APPROVED	
DESIGNED	L. NUNO	10-91	B. WEINSTEIN	JUNE '92
DRAWN	V. TOROMANIAN	10-91		
CHECKED	L. NUNO	10-91		

D101-18.DWG

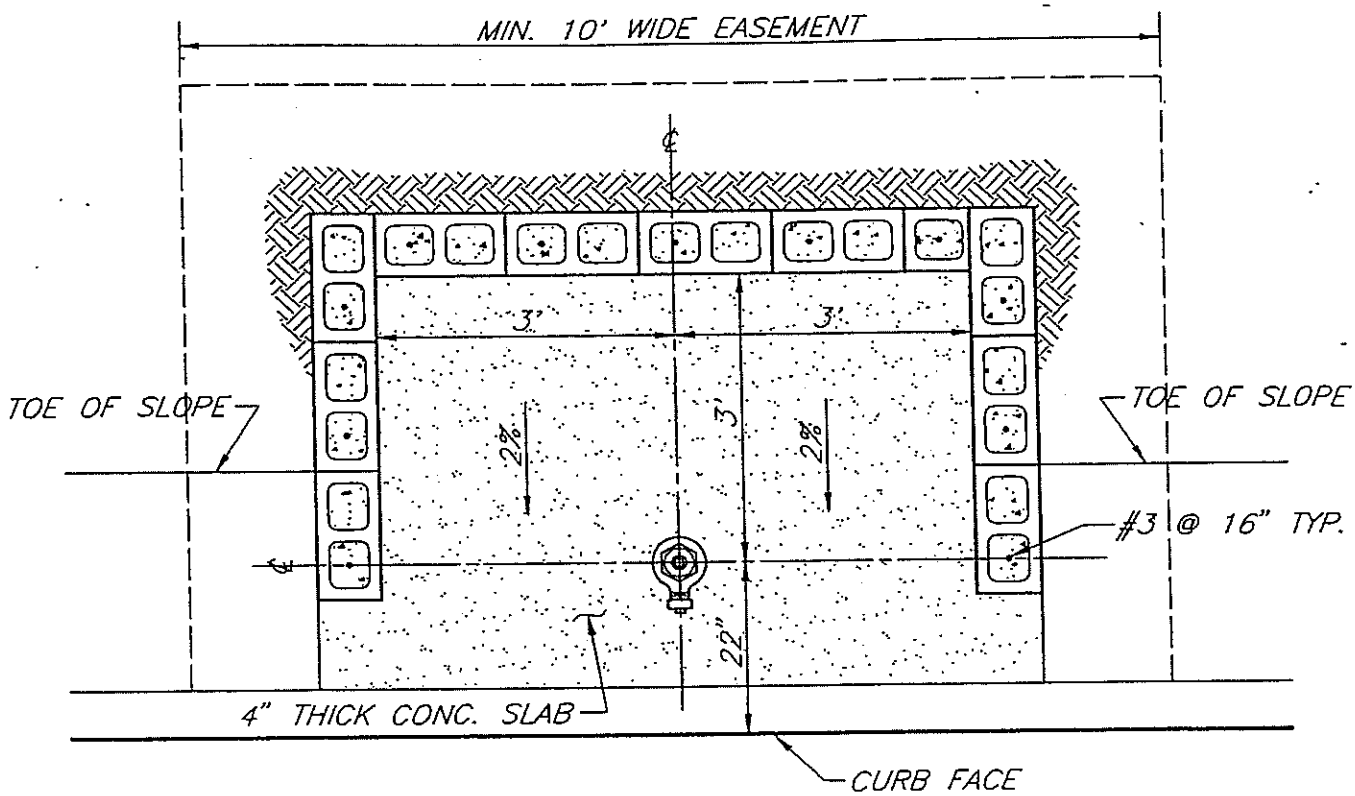

HORIZONTAL SECTION

N.T.S.

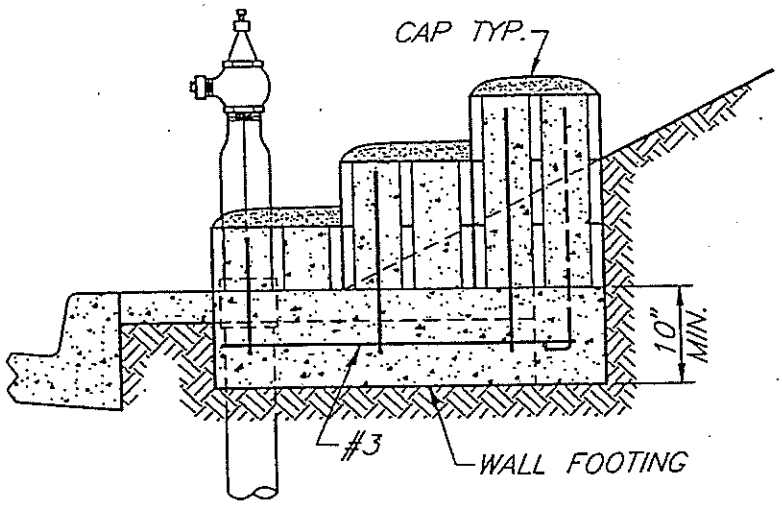

WALL SIDE SECTION

N.T.S.

NOTES:

1. HEIGHT OF WALL SHALL BE ONE BLOCK ABOVE GROUND
2. FILL ALL CELLS WITH GROUT.
3. CAP ALL CELLS WITH MORTAR.
4. CONCRETE SHALL BE CLASS 560-C-3250 IN ACCORDANCE WITH "STANDARD SPECIFICATIONS FOR PUBLIC WORKS CONSTRUCTION" LATEST EDITION, SUBSECTION 201-1.1.2.
5. WALL OVER 5' HIGH WILL REQUIRE SPECIAL PERMIT.

FIRE HYDRANT RETAINING WALL

REVISIONS				
NO.	DATE	INIT.		APP'D

DEPARTMENT OF WATER AND POWER
WATER SYSTEM — CITY OF LOS ANGELES

	NAME	DATE	APPROVED	
DESIGNED	V. TOROMANIAN	4-92	B. WEINSTEIN	JUNE '92
DRAWN	V. TOROMANIAN	4-92		
CHECKED	C. HAMVAS	4-92		

A9461

D101-19.DWG

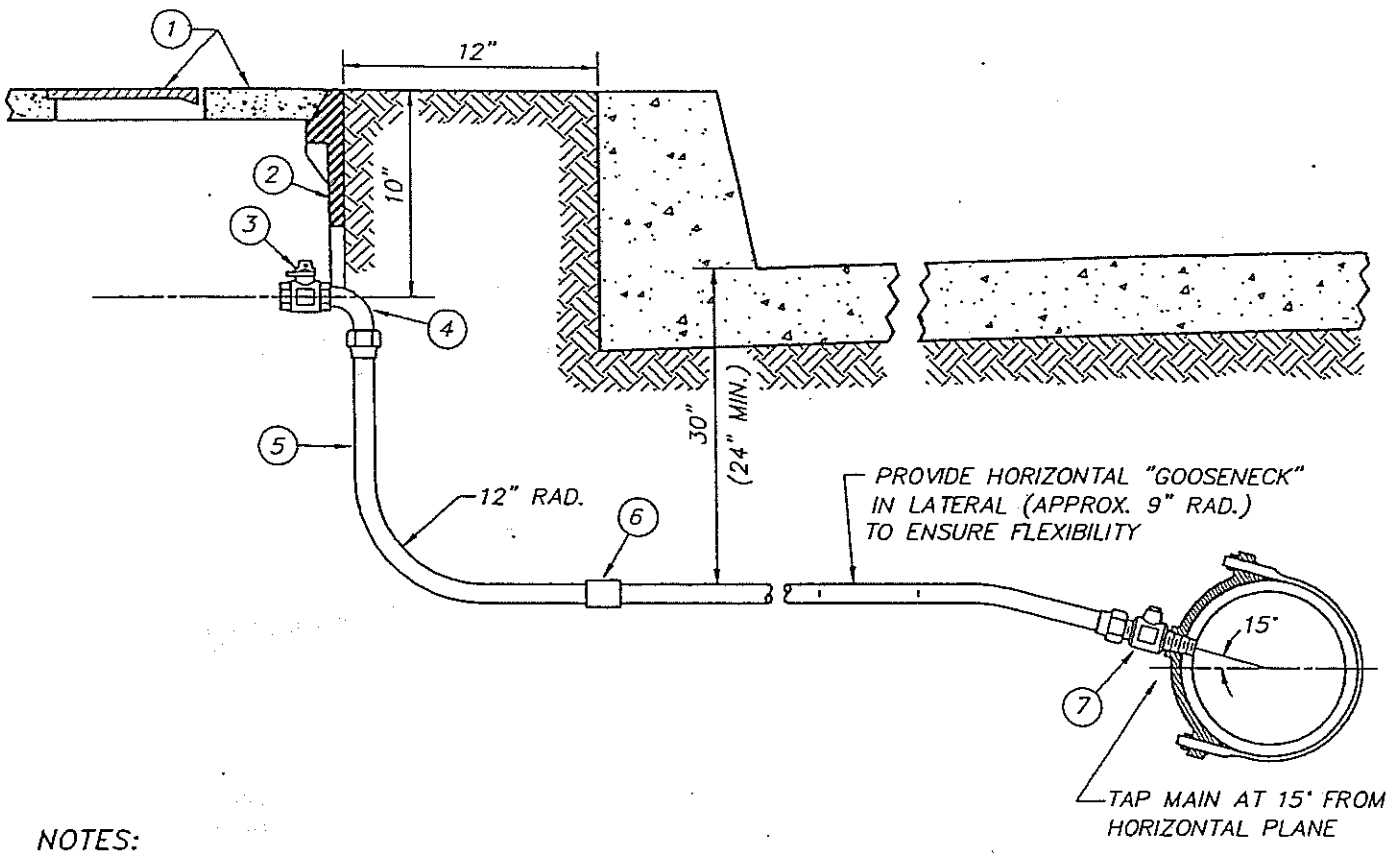

NOTES:

1. METER BOXES SHALL BE LOCATED AT LEAST 4 FEET OUTSIDE THE TOP OF THE DRIVEWAY "X".
2. SOLDER AND FLUX SHALL NOT CONTAIN LEAD.
3. LATERAL SHALL BE FLUSHED WITH WATER TO REMOVE FLUX RESIDUE.
4. SEE STANDARD DRAWING A9476 FOR PIPE CONNECTION REQUIREMENTS.

MATERIAL LIST

ITEM	QTY.	DESCRIPTION	DWG. NO.	MAT. CODE
1	1	#2 CONCRETE HINGED COVER	B-5050-4	39-01-210
2	1	#2 PLASTIC METER BOX	A-9420	39-01-250
3	1	1" BRONZE FEMALE N.P.T. CURB BALL VALVE W/LOCKWING	--------	42-26-484
4	1	1" BRONZE MALE COPPER TUBING TO MALE N.P.T. ELBOW	A-9237	42-06-230
5	VAR.	1" COPPER TUBING	--------	42-06-660
6	VAR.	1" COPPER SOLDER COUPLING	--------	42-75-169
7	1	1" BRONZE MALE CORPORATION THREAD TO MALE COPPER TUBING CORPORATION BALL VALVE	--------	42-26-464

1" DOMESTIC SERVICE INSTALLATION (D.I. PIPE)

A9465

REVISIONS

NO.	DATE	INIT.		APP'D

DEPARTMENT OF WATER AND POWER
WATER SYSTEM — CITY OF LOS ANGELES

	NAME	DATE	APPROVED	
DESIGNED	L. NUNO	11-91	B. WEINSTEIN	JUNE '92
DRAWN	V. TOROMANIAN	11-91		
CHECKED	L. NUNO	3-92		

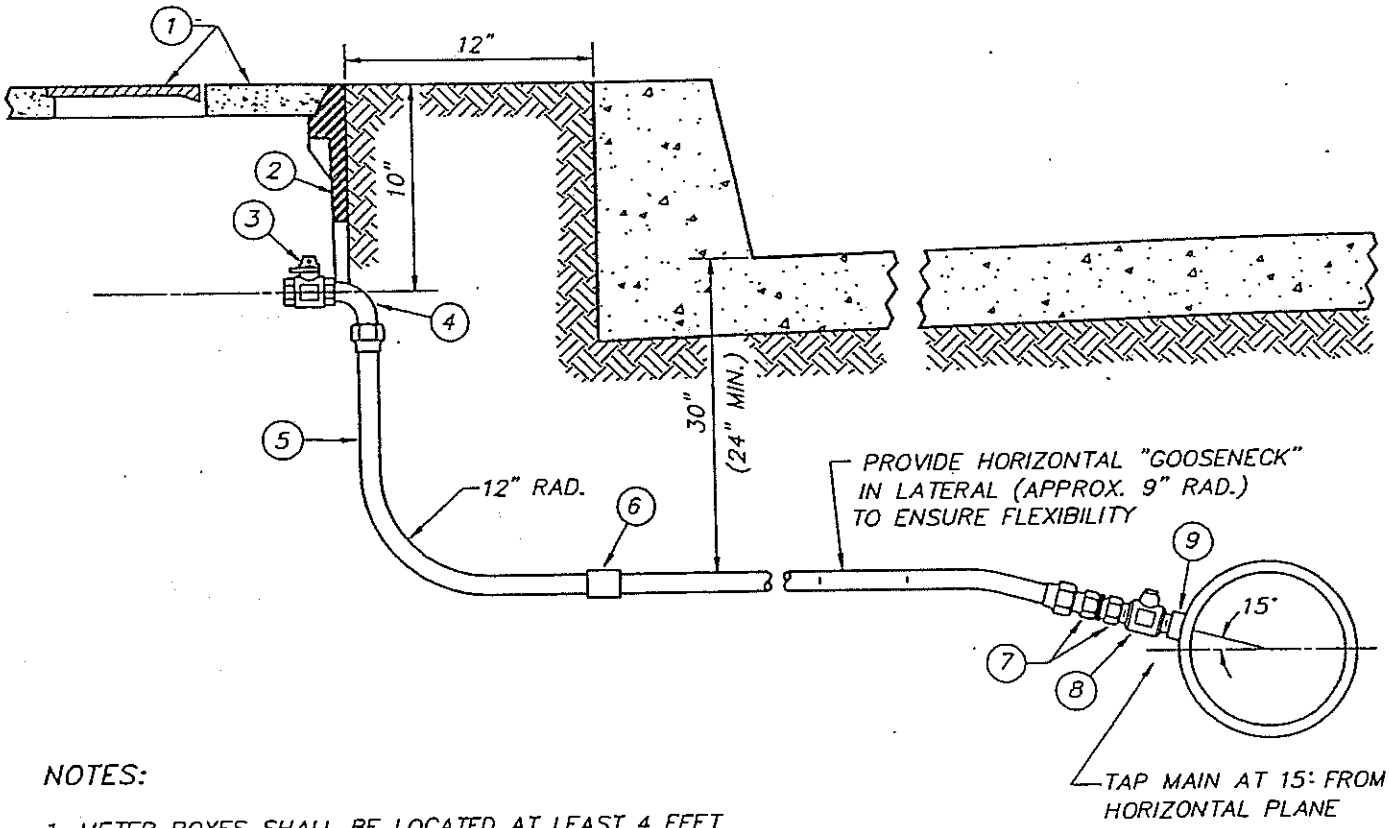

NOTES:

1. METER BOXES SHALL BE LOCATED AT LEAST 4 FEET OUTSIDE THE TOP OF THE DRIVEWAY "X".
2. SOLDER AND FLUX SHALL NOT CONTAIN LEAD.
3. LATERAL SHALL BE FLUSHED WITH WATER TO REMOVE FLUX RESIDUE.
4. SEE STANDARD DRAWING A9477 FOR PIPE CONNECTION REQUIREMENTS.

MATERIAL LIST

ITEM	QTY.	DESCRIPTION	DWG. NO.	MAT. CODE
1	1	#2 CONCRETE HINGED COVER	B-5050-4	39-01-210
2	1	#2 PLASTIC METER BOX	A-9420	39-01-250
3	1	1" BRONZE FEMALE N.P.T. CURB BALL VALVE W/LOCKWING	--------	42-26-484
4	1	1" BRONZE MALE COPPER TUBING TO MALE N.P.T. ELBOW	A-9237	42-06-230
5	VAR.	1" COPPER TUBING	--------	42-06-660
6	VAR.	1" COPPER SOLDER COUPLING	--------	42-75-169
7	1	1" BRONZE INSULATING COUPLING	--------	42-00-050
8	1	1" BRONZE MALE CORPORATION THREAD TO MALE COPPER TUBING CORPORATION BALL VALVE	--------	42-26-464
9	1	1" STEEL CORPORATION THREAD WELD COUPLING	A-9364	13-06-171

1" DOMESTIC SERVICE INSTALLATION (STL. PIPE)

A9466

REVISIONS				
NO.	DATE	INIT.		APP'D

DEPARTMENT OF WATER AND POWER
WATER SYSTEM. CITY OF LOS ANGELES

	NAME	DATE	APPROVED	
DESIGNED	L. NUNO	11-91	B. WEINSTEIN	JUNE '92
DRAWN	V. TOROMANIAN	11-91		
CHECKED	L. NUNO	3-92		

D101-21.DWG

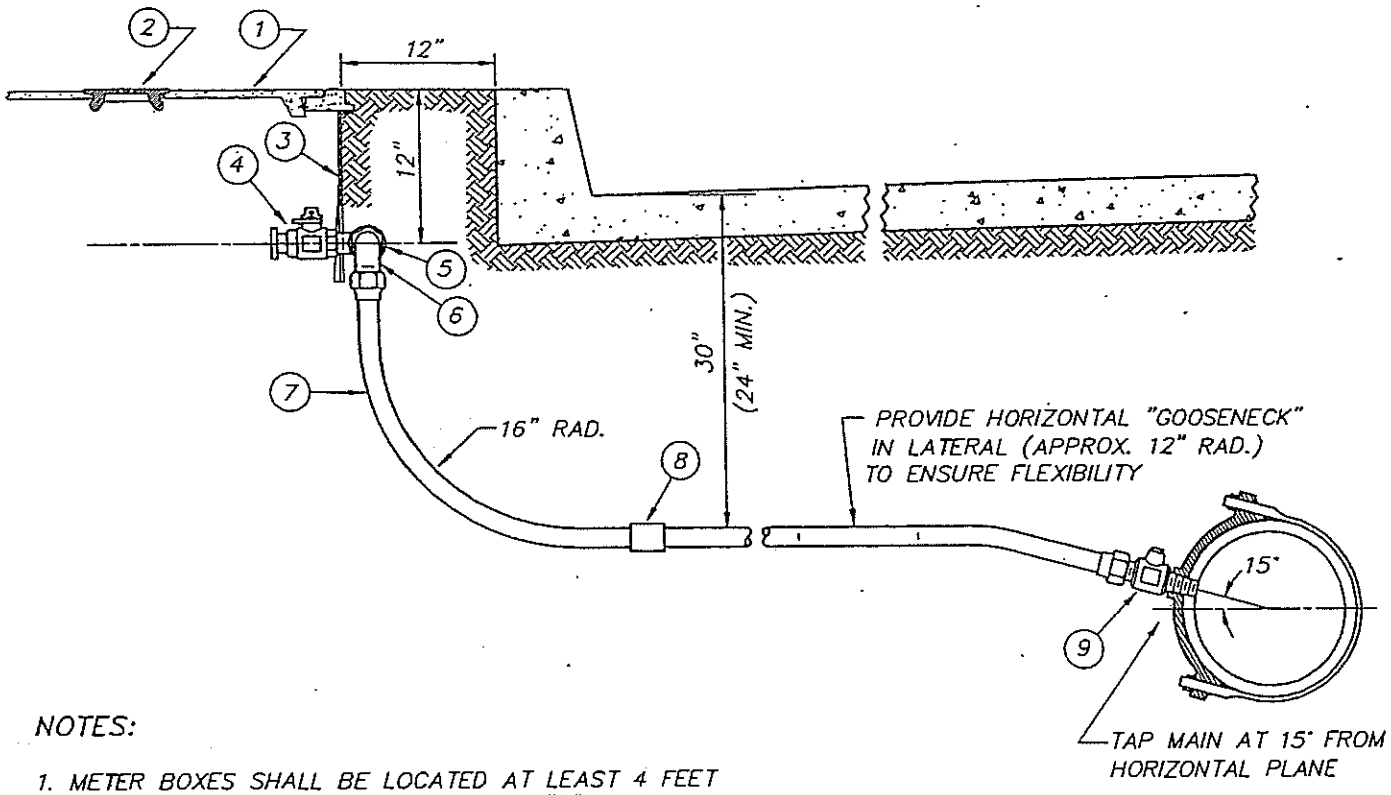

NOTES:

1. METER BOXES SHALL BE LOCATED AT LEAST 4 FEET OUTSIDE THE TOP OF THE DRIVEWAY "X".
2. SOLDER AND FLUX SHALL NOT CONTAIN LEAD.
3. LATERAL SHALL BE FLUSHED WITH WATER TO REMOVE FLUX RESIDUE.
4. SEE STANDARD DRAWING A9476 FOR PIPE CONNECTION REQUIREMENTS.

MATERIAL LIST

ITEM	QTY.	DESCRIPTION	DWG. NO.	MAT. CODE
1	1	#3 REINFORCED CONCRETE POLYMER COVER	B-5096	39-01-357
2	1	CAST IRON CENTERPIECE	A-9290	39-01-190
3	1	#3 PLASTIC METER BOX	A-9422	39-01-258
4	1	1-1/2" BRZ. FLANGE CURB BALL VALVE W/LOCKWING	--------	42-28-494
5	1	1-1/2" BRZ. STREET ELBOW	A-9314	42-08-939
6	1	1-1/2" BRZ. MALE COPPER TUBING TO MALE N.P.T. ELBOW	A-9237	42-08-230
7	VAR.	1-1/2" COPPER TUBING	--------	42-08-663
8	VAR.	1-1/2" COPPER SOLDER COUPLING	--------	42-75-177
9	1	1-1/2" BRONZE MALE CORPORATION THREAD TO MALE COPPER TUBING CORPORATION BALL VALVE	--------	42-28-464

1-1/2" DOMESTIC SERVICE INSTALLATION (D.I. PIPE)

A9467

REVISIONS				
NO.	DATE	INIT.		APP'D

DEPARTMENT OF WATER AND POWER
WATER SYSTEM — CITY OF LOS ANGELES

	NAME	DATE	APPROVED	
DESIGNED	L. NUNO	11-91	B. WEINSTEIN	JUNE '92
DRAWN	V. TOROMANIAN	11-91		
CHECKED	L. NUNO	3-92		

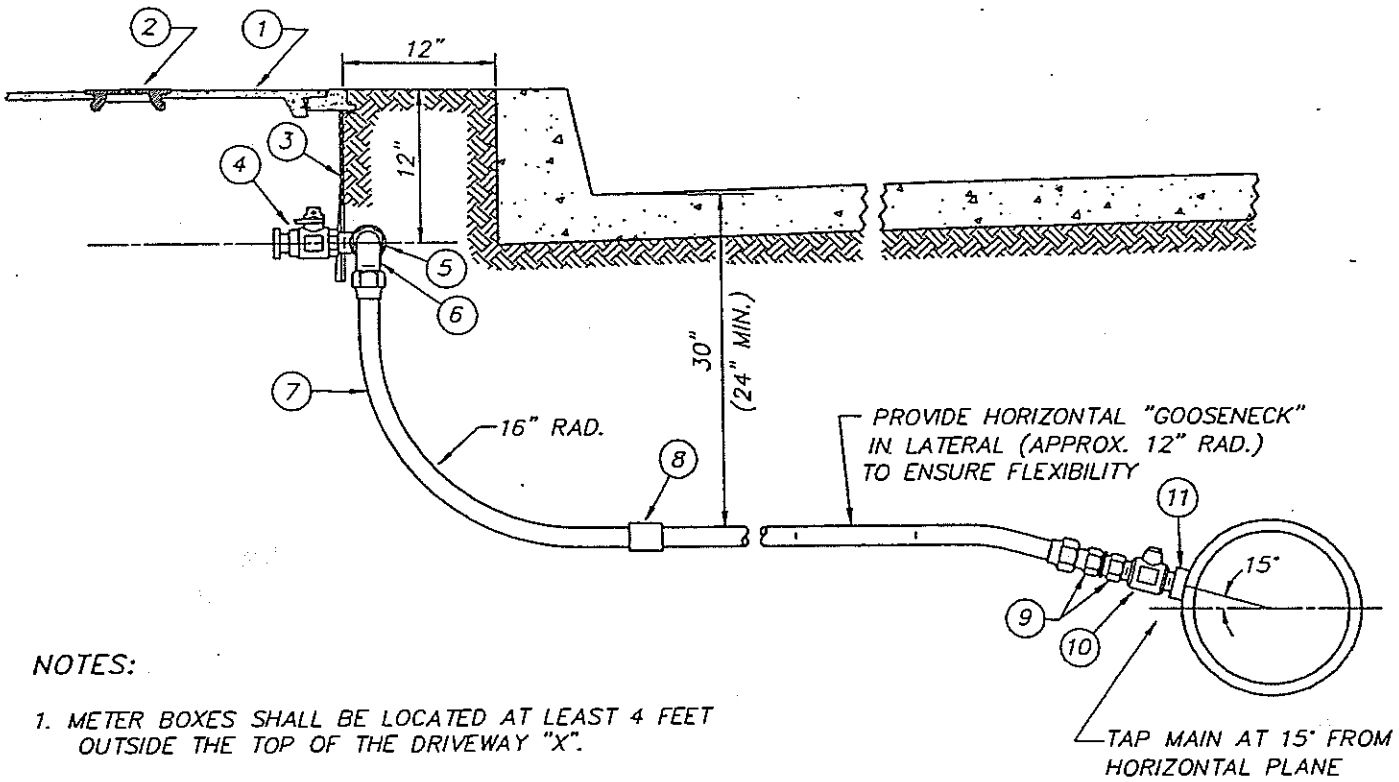

NOTES:

1. METER BOXES SHALL BE LOCATED AT LEAST 4 FEET OUTSIDE THE TOP OF THE DRIVEWAY "X".
2. SOLDER AND FLUX SHALL NOT CONTAIN LEAD.
3. LATERAL SHALL BE FLUSHED WITH WATER TO REMOVE FLUX RESIDUE.
4. SEE STANDARD DRAWING A9477 FOR PIPE CONNECTION REQUIREMENTS.

MATERIAL LIST

ITEM	QTY.	DESCRIPTION	DWG. NO.	MAT. CODE
1	1	#3 REINFORCED CONCRETE POLYMER COVER	B-5096	39-01-357
2	1	CAST IRON CENTERPIECE	A-9290	39-01-190
3	1	#3 PLASTIC METER BOX	A-9422	39-01-258
4	1	1-1/2" BRZ. FLANGE CURB BALL VALVE W/LOCKWING	--------	42-28-494
5	1	1-1/2" BRZ. STREET ELBOW	A-9314	42-08-939
6	1	1-1/2" BRZ. MALE COPPER TUBING TO MALE N.P.T. ELBOW	A-9237	42-08-230
7	VAR.	1-1/2" COPPER TUBING	--------	42-08-663
8	VAR.	1-1/2" COPPER SOLDER COUPLING	--------	42-75-177
9	1	1-1/2" BRZ. INSULATING COUPLING	--------	42-00-051
10	1	1-1/2" BRZ. MALE CORPORATION THREAD TO MALE COPPER TUBING CORPORATION BALL VALVE	--------	42-28-464
11	1	1-1/2" STEEL CORPORATION THREAD WELD COUPLING	A-9365	13-08-171

1-1/2" DOMESTIC SERVICE INSTALLATION (STL. PIPE)

A9468

REVISIONS				
NO.	DATE	INIT.		APP'D

DEPARTMENT OF WATER AND POWER
WATER SYSTEM — CITY OF LOS ANGELES

	NAME	DATE	APPROVED	
DESIGNED	L. NUNO	12-91	B. WEINSTEIN	JUNE '92
DRAWN	V. TOROMANIAN	12-91		
CHECKED	L. NUNO	3-92		

D101-23.DWG

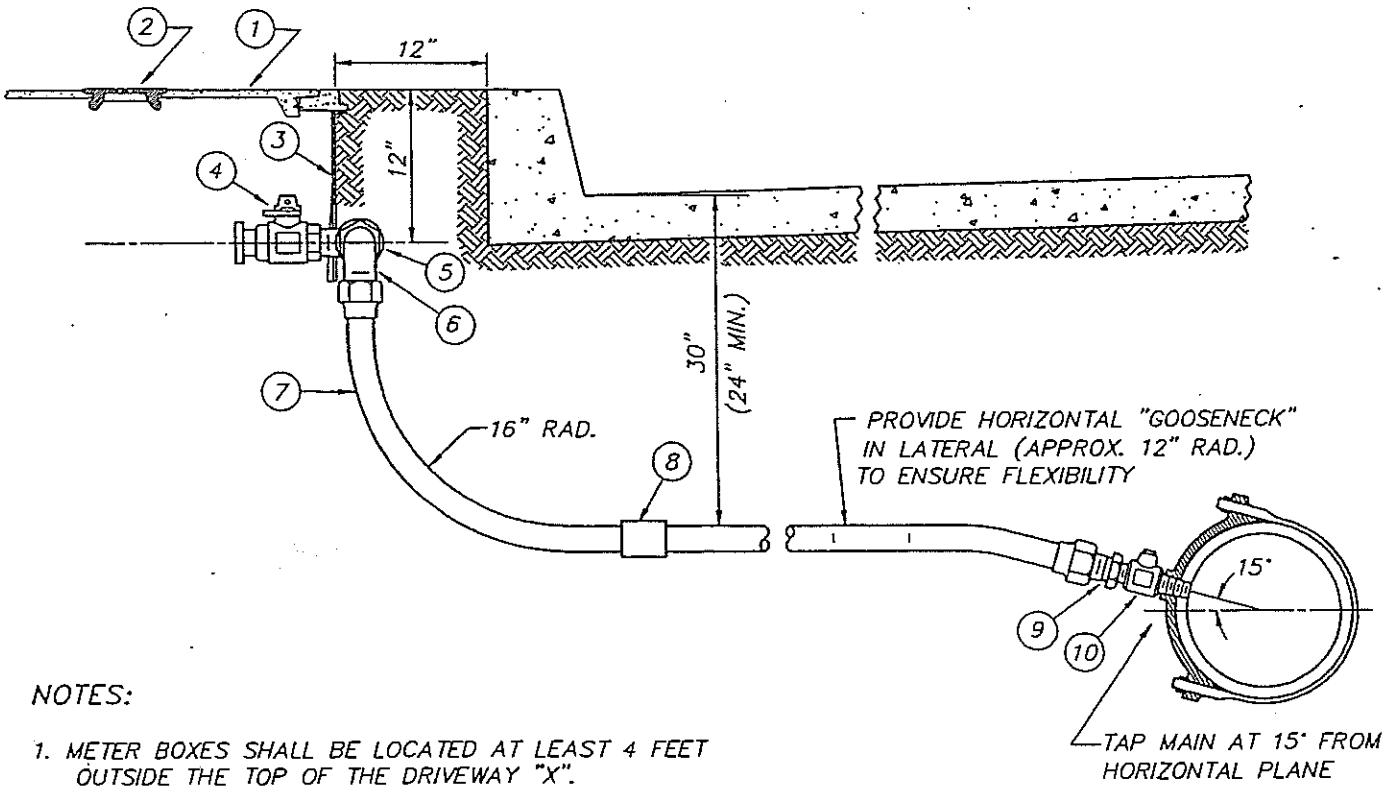

NOTES:

1. METER BOXES SHALL BE LOCATED AT LEAST 4 FEET OUTSIDE THE TOP OF THE DRIVEWAY "X".
2. SOLDER AND FLUX SHALL NOT CONTAIN LEAD.
3. LATERAL SHALL BE FLUSHED WITH WATER TO REMOVE FLUX RESIDUE.
4. SEE STANDARD DRAWING A9476 FOR PIPE CONNECTION REQUIREMENTS.

MATERIAL LIST

ITEM	QTY.	DESCRIPTION	DWG. NO.	MAT. CODE
1	1	#3 REINFORCED CONCRETE POLYMER COVER	B-5096	39-01-357
2	1	CAST IRON CENTERPIECE	A-9290	39-01-190
3	1	#3 PLASTIC METER BOX	A-9422	39-01-258
4	1	2" BRZ. FLANGE CURB BALL VALVE W/LOCKWING	--------	42-29-494
5	1	2" BRZ. STREET ELBOW	A-9314	42-09-939
6	1	2" BRZ. MALE COPPER TUBING TO MALE N.P.T. ELBOW	A-9237	42-09-230
7	VAR.	2" COPPER TUBING	--------	42-09-663
8	VAR.	2" COPPER SOLDER COUPLING	--------	42-75-182
9	1	2" X 1-1/2" BRASS ADAPTOR	A-9361	42-09-002
10	1	1-1/2" BRONZE MALE CORPORATION THREAD TO MALE COPPER TUBING CORPORATION BALL VALVE	--------	42-28-464

2" DOMESTIC SERVICE INSTALLATION (D.I. PIPE)

A9469

REVISIONS				
NO.	DATE	INIT.		APP'D

DEPARTMENT OF WATER AND POWER
WATER SYSTEM — CITY OF LOS ANGELES

	NAME	DATE	APPROVED	
DESIGNED	L. NUNO	11-91	B. WEINSTEIN	JUNE '92
DRAWN	V. TOROMANIAN	11-91		
CHECKED	L. NUNO	3-92		

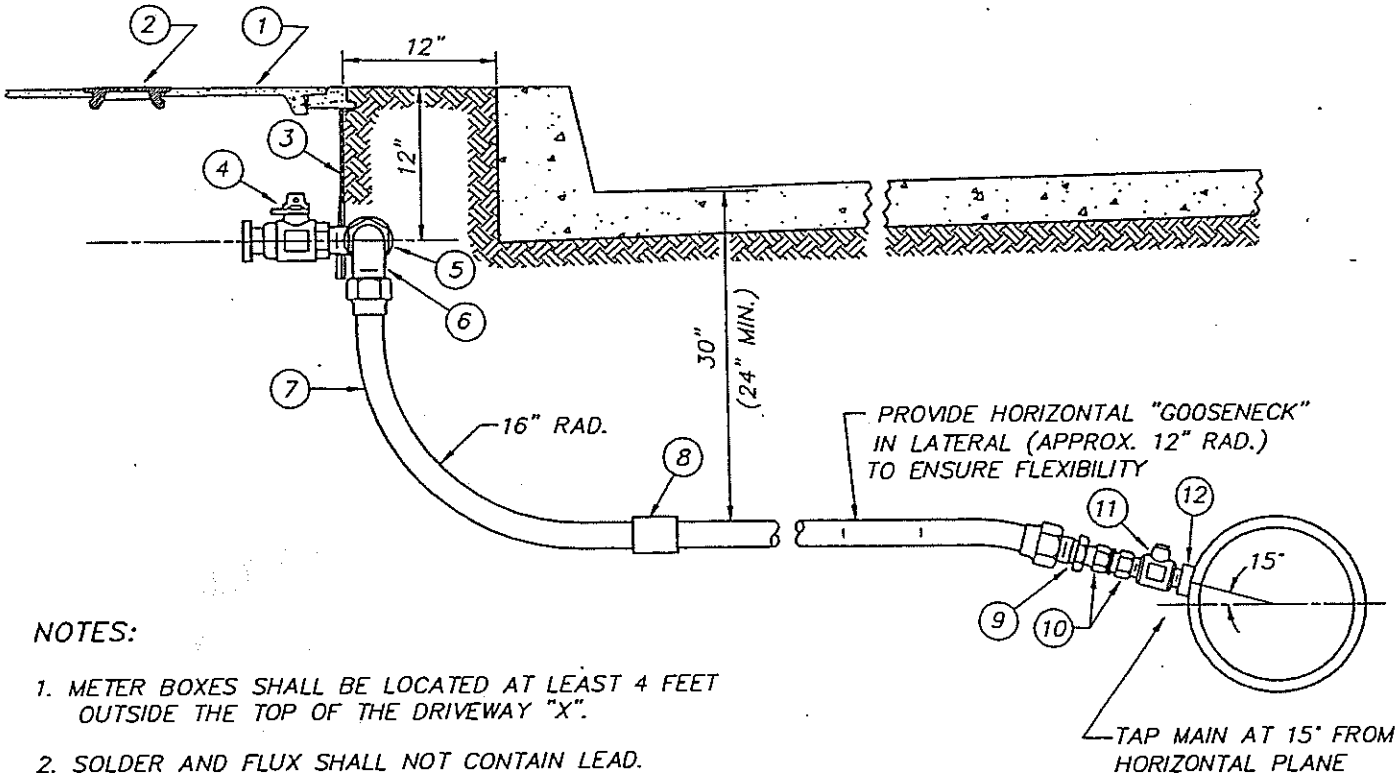

NOTES:

1. METER BOXES SHALL BE LOCATED AT LEAST 4 FEET OUTSIDE THE TOP OF THE DRIVEWAY "X".
2. SOLDER AND FLUX SHALL NOT CONTAIN LEAD.
3. LATERAL SHALL BE FLUSHED WITH WATER TO REMOVE FLUX RESIDUE.
4. SEE STANDARD DRAWING A9477 FOR PIPE CONNECTION REQUIREMENTS.

MATERIAL LIST

ITEM	QTY.	DESCRIPTION	DWG. NO.	MAT. CODE
1	1	#3 REINFORCED CONCRETE POLYMER COVER	B-5096	39-01-357
2	1	CAST IRON CENTERPIECE	A-9290	39-01-190
3	1	#3 PLASTIC METER BOX	A-9422	39-01-258
4	1	2" BRZ. FLANGE CURB BALL VALVE W/LOCKWING	--------	42-29-494
5	1	2" BRZ. STREET ELBOW	A-9314	42-09-939
6	1	2" BRZ. MALE COPPER TUBING TO MALE N.P.T. ELBOW	A-9237	42-09-230
7	VAR.	2" COPPER TUBING	--------	42-09-663
8	VAR.	2" COPPER SOLDER COUPLING	--------	42-75-182
9	1	2" X 1-1/2" BRASS ADAPTOR	A-9361	42-09-002
10	1	1-1/2" BRZ. INSULATING COUPLING	--------	42-00-051
11	1	1-1/2" BRONZE MALE CORPORATION THREAD TO MALE COPPER TUBING CORPORATION BALL VALVE	--------	42-28-464
12	1	1-1/2" STEEL CORPORATION THREAD WELD COUPLING	A-9365	13-08-171

2" DOMESTIC SERVICE INSTALLATION (STL. PIPE)

A9470

REVISIONS				
NO.	DATE	INIT.		APP'D

DEPARTMENT OF WATER AND POWER
WATER SYSTEM — CITY OF LOS ANGELES

	NAME	DATE	APPROVED	
DESIGNED	L. NUNO	12-91	B. WEINSTEIN	JUNE '92
DRAWN	V. TOROMANIAN	12-91		
CHECKED	L. NUNO	3-92		

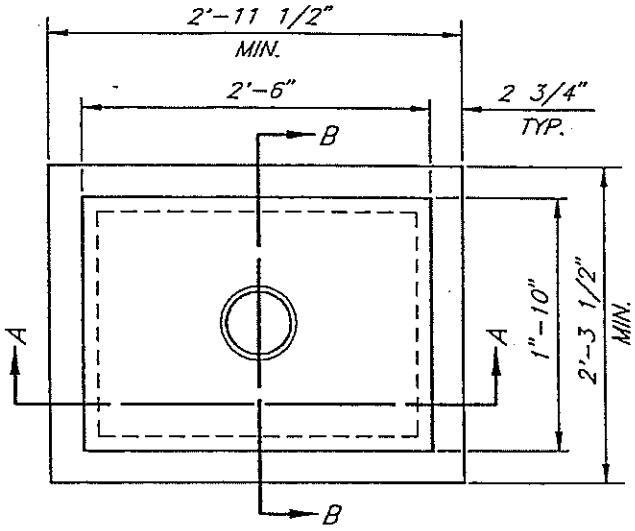

PLAN
NTS

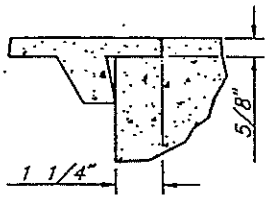

DETAIL
NTS

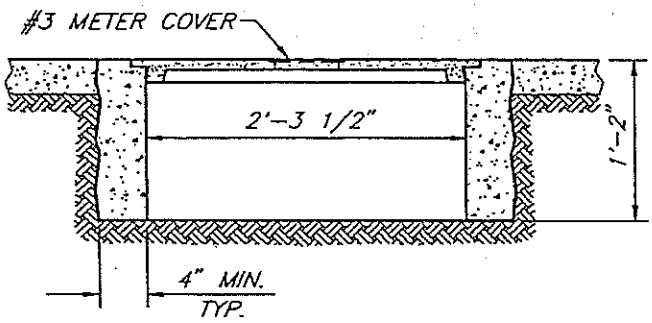

SECTION A-A
NTS

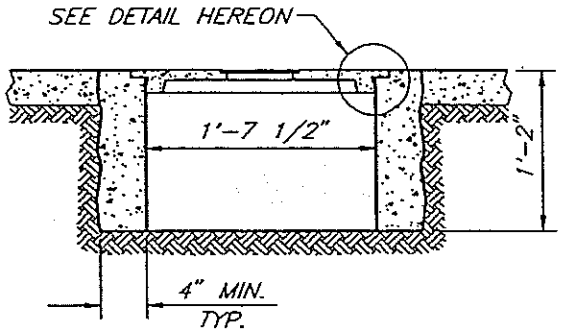

SECTION B-B
NTS

NOTES:

1. CEMENT SHALL CONFORM TO THE STANDARD SPECIFICATIONS FOR PORTLAND CEMENT ASTM C-150, TYPE II.
2. CONCRETE SHALL BE CLASS 560-B-3250 IN ACCORDANCE WITH "STANDARD SPECIFICATIONS FOR PUBLIC WORKS CONSTRUCTION" LATEST EDITION, SUBSECTION 201-1.1.2.
3. COVER SHALL CONFORM TO DWPWS STANDARD DRAWING B5096.
4. COVER SHALL NOT ROCK WHEN PLACED ON THE METER COVER OPENING.
5. WALL TOP SHALL HAVE A NON-SKID SURFACE (BROOM FINISH).
6. INLET AND OUTLET PIPING SHALL BE ENCASED IN WALLS.
7. INLET AND OUTLET PIPING SHALL BE WRAPPED WITH TAR PAPER PRIOR TO CASTING WALLS.

NO. 3 CONCRETE METER BOX
(SIDEWALK LOADING ONLY)

REVISIONS				
NO.	DATE	INIT.		APP'D

DEPARTMENT OF WATER AND POWER
WATER SYSTEM — CITY OF LOS ANGELES

	NAME	DATE	APPROVED	
DESIGNED	V. TOROMANIAN	4-92	B. WEINSTEIN	JUNE '92
DRAWN	V. TOROMANIAN	4-92		
CHECKED	C. HAMVAS	4-92		

A9471

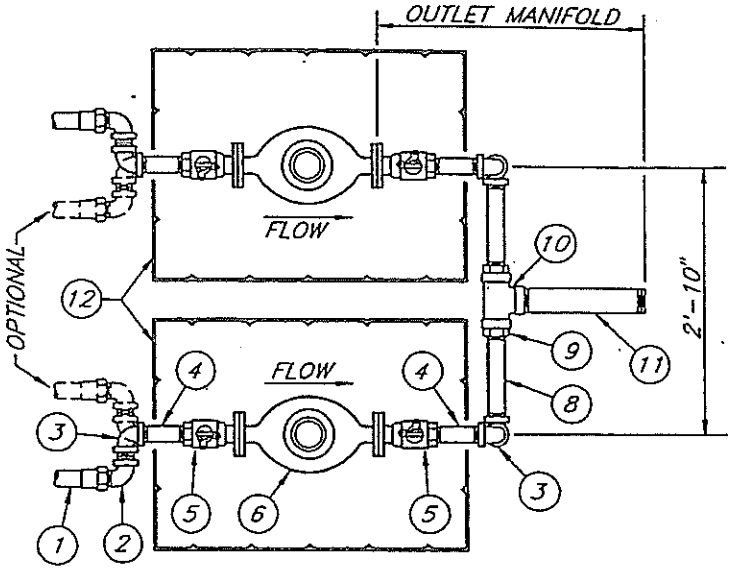

HORIZONTAL SECTION
NTS

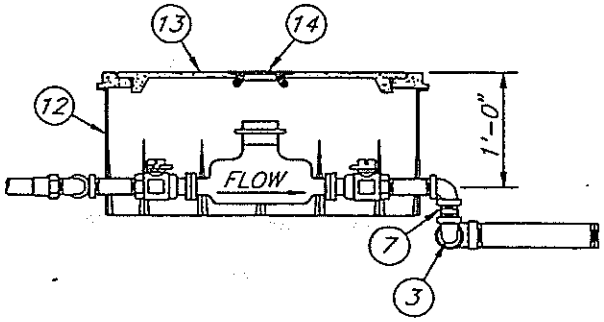

PROFILE
NTS

NOTES:

1. CONNECTIONS TO WATER MAIN SHALL BE IDENTICAL TO 2" SERVICE CONNECTIONS.
2. MANIFOLD AND METERS ARE SUPPLIED BY DWP–WS AS AN ASSEMBLY FOR DEVELOPER–INSTALLED SERVICE.
3. SOLDER AND FLUX SHALL NOT CONTAIN LEAD.
4. SERVICE LATERALS SHALL BE FLUSHED WITH WATER PRIOR TO INSTALLATION OF METERS TO REMOVE FLUX RESIDUE.
5. METER BOXES SHALL BE LOCATED AT LEAST 4 FEET OUTSIDE THE TOP OF THE DRIVEWAY "X".

MATERIAL LIST

ITEM	QTY.	DESCRIPTION	DWG. NO.	MAT. CODE
1	VAR.	2" COPPER TUBING	--------	42–09–663
2	2	2" BRZ. MALE COPPER TUBING TO MALE N.P.T. ELBOW	A–9237	42–09–230
3	6	2" X 90° BRZ. ELL PIPE	A–9325	42–09–224
4	4	2" X 6" BRZ. STD. NIPPLE PIPE	--------	42–09–366
5	4	2" BRZ. FLG. CURB BALL VALVE W/ LOCKWING	--------	42–29–494
6	2	2" METER	--------	44–83–901
7	2	2" X 2–1/2" BRZ. STD. NIPPLE PIPE	--------	42–09–360
8	2	2" X 12" BRZ. STD. NIPPLE PIPE	--------	42–09–369
9	2	3" X 2" BRZ. HEX. BUSHING	--------	42–11–039
10	1	3" BRZ. STD. TEE PIPE	--------	42–11–620
11	1	3" X 18" BRZ. STD. NIPPLE PIPE	--------	42–11–372
12	2	#3 PLASTIC METER BOX	A–9422	39–01–258
13	2	#3 REINFORCED CONCRETE POLYMER COVER (CENTER HOLE)	B–5096	39–01–357
14	2	CAST IRON CENTERPIECE	A–9290	39–01–190

3" EQUIVALENT SERVICE IN PLASTIC METER BOXES
(SIDEWALK LOADING ONLY)

A9472

REVISIONS

NO.	DATE	INIT.		APP'D

DEPARTMENT OF WATER AND POWER
WATER SYSTEM — CITY OF LOS ANGELES

	NAME	DATE	APPROVED	
DESIGNED	L. NUNO	12–91	B. WEINSTEIN	JUNE '92
DRAWN	V. TOROMANIAN	1–92		
CHECKED	L. NUNO	1–92		

NOTES:

1. CEMENT SHALL CONFORM TO THE STANDARD SPECIFICATIONS FOR PORTLAND CEMENT ASTM C-150, TYPE II.
2. CONCRETE SHALL BE CLASS 560-B-3250 IN ACCORDANCE WITH "STANDARD SPECIFICATIONS FOR PUBLIC WORKS CONSTRUCTION" LATEST EDITION, SUBSECTION 201-1.1.2.
3. COVERS SHALL NOT ROCK WHEN PLACED ON THE METER COVER OPENING.
4. WALL TOP SHALL HAVE A NON-SKID SURFACE (BROOM FINISH).
5. CONNECTIONS TO WATER MAIN SHALL BE IDENTICAL TO 2" SERVICE CONNECTIONS.
6. ENCASE OUTLET MANIFOLD PIPING AND INLET NIPPLES IN VAULT WALL AS SHOWN.
7. MANIFOLD AND METERS ARE SUPPLIED BY DWP-WS AS AN ASSEMBLY FOR DEVELOPER-INSTALLED SERVICE.
8. SOLDER AND FLUX SHALL NOT CONTAIN LEAD.
9. SERVICE LATERAL SHALL BE FLUSHED WITH WATER PRIOR TO INSTALLATION OF METER TO REMOVE FLUX RESIDUE.
10. METER BOXES SHALL BE LOCATED AT LEAST 4 FEET OUTSIDE THE TOP OF THE DRIVEWAY "X".

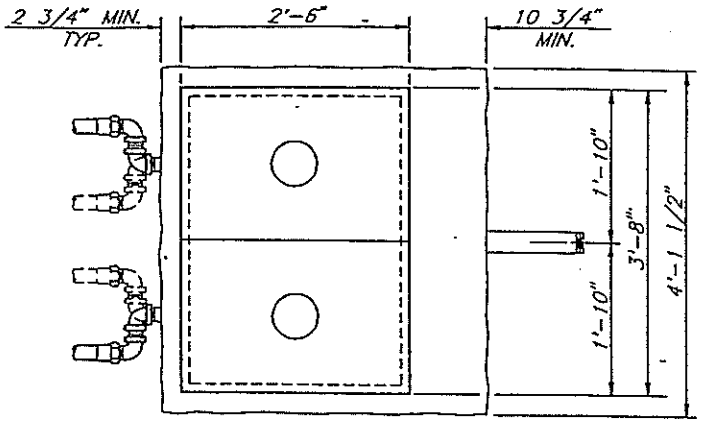

PLAN
NTS

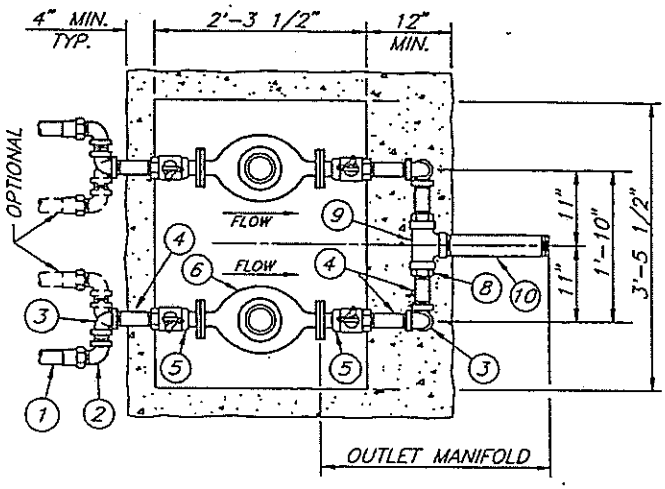

HORIZONTAL SECTION
NTS

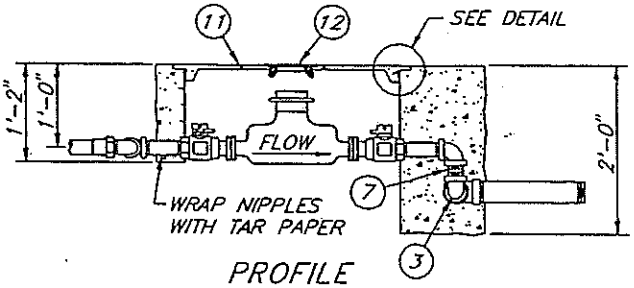

PROFILE
NTS

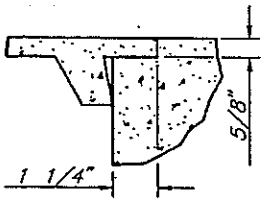

DETAIL
NTS

MATERIAL LIST

ITEM	QTY.	DESCRIPTION	DWG. NO.	MAT. CODE
1	VAR.	2" COPPER TUBING	--------	42-09-663
2	2	2" BRZ. MALE COPPER TUBING TO MALE N.P.T. ELBOW	A-9237	42-09-230
3	6	2" X 90° BRZ. ELL PIPE	A-9325	42-09-224
4	6	2" X 6" BRZ. STD. NIPPLE PIPE	--------	42-09-366
5	4	2" BRZ. FLG. CURB BALL VALVE W/ LOCKWING	--------	42-29-494
6	2	2" METER	--------	44-83-901
7	2	2" X 2-1/2" BRZ. STD. NIPPLE PIPE	--------	42-09-360
8	2	3" X 2" BRZ. HEX. BUSHING	--------	42-11-039
9	1	3" BRZ. STD. TEE PIPE	--------	42-11-620
10	1	3" X 18" BRZ. STD. NIPPLE PIPE	--------	42-11-372
11	2	#3 REINFORCED CONCRETE POLYMER COVER (CENTER HOLE)	B-5096	39-01-357
12	2	CAST IRON CENTERPIECE	A-9290	39-01-190

3" EQUIVALENT SERVICE IN CONCRETE METER BOX

(SIDEWALK LOADING ONLY)

A9473

REVISIONS

NO.	DATE	INIT.		APP'D

DEPARTMENT OF WATER AND POWER
WATER SYSTEM — CITY OF LOS ANGELES

	NAME	DATE	APPROVED	
DESIGNED	L. NUNO	12-91	B. WEINSTEIN	JUNE '92
DRAWN	V. TOROMANIAN	1-92		
CHECKED	L. NUNO	1-92		

D101-28.DWG

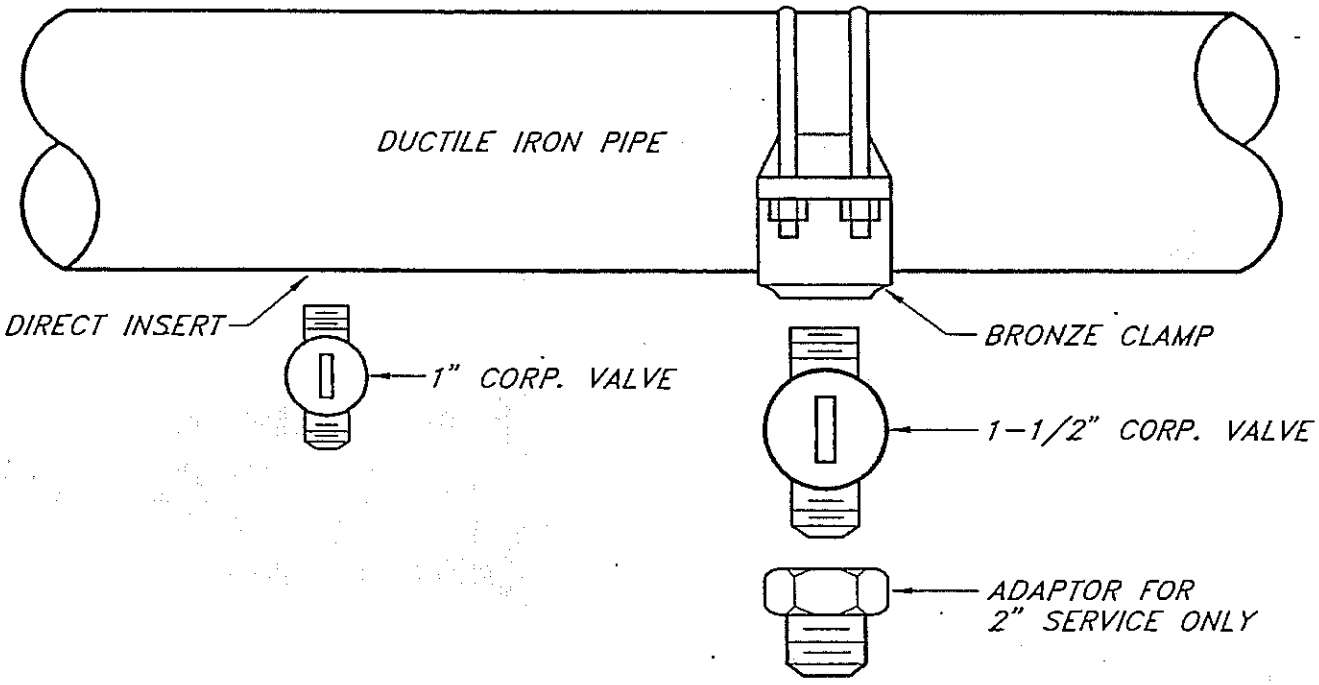

CONNECTION REQUIREMENTS – NEW MAIN		
CORP. VALVE SIZE	D.I. PIPE SIZE	CONNECTION TYPE
1" OR 1-1/2"	4" THROUGH 12"	BRONZE SERVICE SADDLE, DOUBLE STRAP
	16" AND LARGER	DIRECT INSERT

CORPORATION VALVE INSTALLATION (D.I. PIPE)

A9476

REVISIONS				
NO.	DATE	INIT.		APP'D

DEPARTMENT OF WATER AND POWER
WATER SYSTEM — CITY OF LOS ANGELES

	NAME	DATE	APPROVED	
DESIGNED	V. TOROMANIAN	4-92	B. WEINSTEIN	JUNE '92
DRAWN	V. TOROMANIAN	4-92		
CHECKED	C. HAMYAS	4-92		

D101-29.DWG

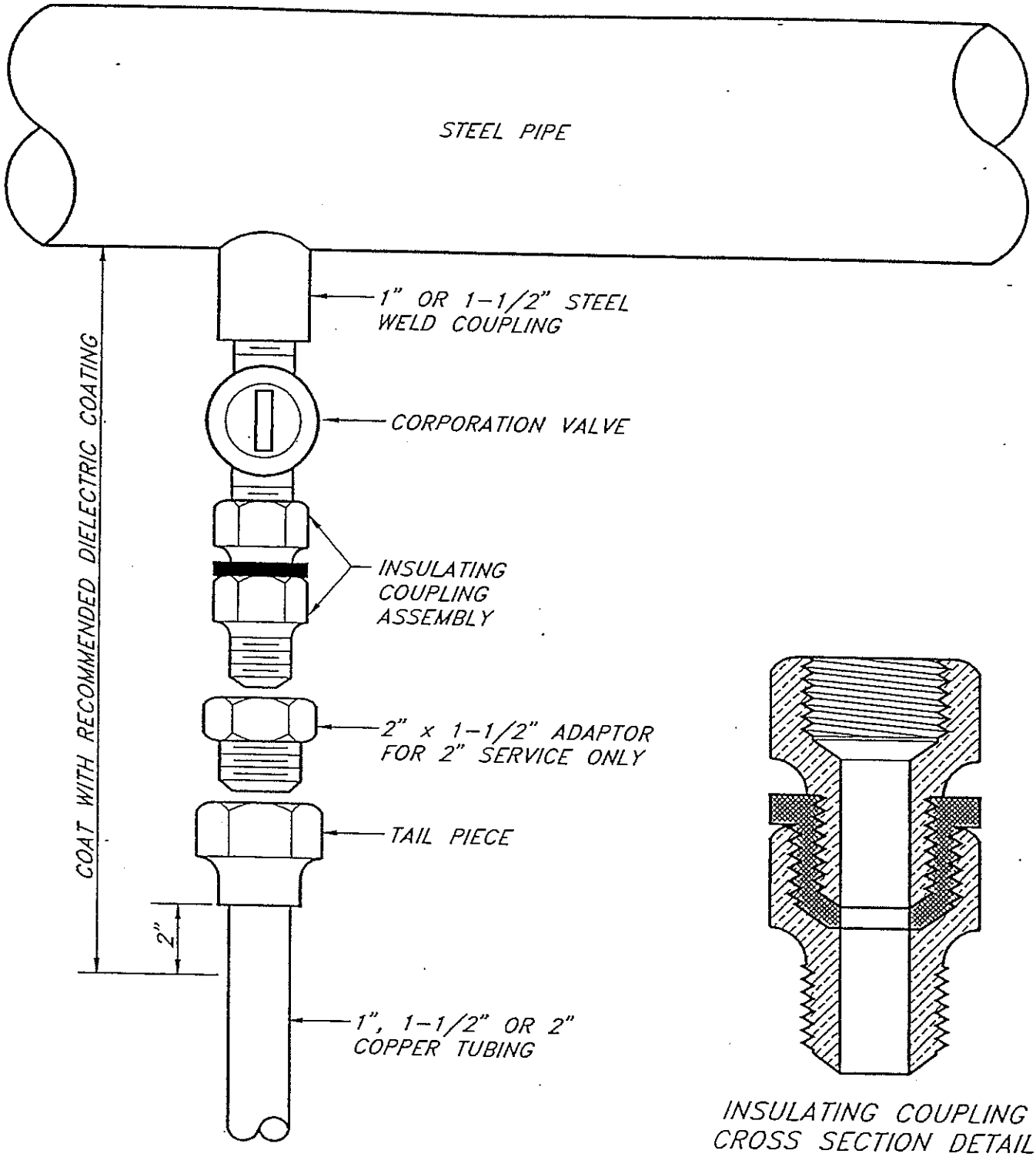

INSULATING COUPLING CROSS SECTION DETAIL

CORPORATION VALVE INSTALLATION (STEEL PIPE)

REVISIONS				
NO.	DATE	INIT.		APP'D

DEPARTMENT OF WATER AND POWER
WATER SYSTEM — CITY OF LOS ANGELES

	NAME	DATE	APPROVED	
DESIGNED	V. TOROMANIAN	6-94	B. WEINSTEIN	JUNE '94
DRAWN	V. TOROMANIAN	6-94		
CHECKED	C. HAMVAS	6-94		

D101-30.DWG

EXERPTS FROM

ENGINEERING STANDARDS MANUAL
WATER OPERATING DIVISION
LOS ANGELES DEPARTMENT OF WATER AND POWER

CHAPTER 7

EARTHWORK

7.01 EARTHWORK DEFINED

Earthwork shall include all clearing, grubbing, grading, excavation, fill, backfill, excess excavation, bedding material, borrow material, and surface restoration as may be required to complete the work.

7.02 EXPLORATORY EXCAVATION

All underground utilities and structures that may interfere with construction shall be located and the location verified sufficiently in advance to permit necessary relocations without delays.

7.03 ROAD PREPARATION

Prior to installation of water mains in streets, curbs and gutters shall be in place and road construction shall have progressed to within fifteen inches (15") of the finished street grade. The road surface shall be smooth, clear of debris, and free from deep holes, ruts and large rocks which may hamper main installation.

7.04 EXCAVATION TO LINE AND GRADE

All excavations shall be made to lines and grades established by the approved drawings. Pipe trenches shall be excavated to a minimum depth of six inches (6") below the bottom of the pipe. Deviation from grades will be allowed when approved by the Department, in accordance with Sections 8.06 and 8.07 of these Standards.

7.05 TRENCHING OPERATIONS

A. Trench Width: All existing asphalt or concrete surfacing shall be saw-cut vertically in a straight line that is slightly wider on each side than the trench excavation to prevent raveling of the remaining pavement during excavation and construction. Removed asphalt or concrete surfacing material in its existing form shall not be used in any fill or backfill.

The trench shall be excavated to a minimum width of eighteen inches (18") or a minimum of six inches (6") on each side of the pipe, whichever is greater, for proper placement and densification of the bedding and backfill material.

B. Trench Support: The Contractor shall comply with Section 6500 of the Labor Code of the State of California by preparing a detailed plan for the excavation of all trenches five feet (5') or more in depth showing the design of shoring, bracing and sloping, or other provisions to be made for worker protection from the hazard of caving ground during the excavation of such trenches. A copy of this plan shall be submitted to the Department, for information only, in advance of construction. If such plan varies from the shoring system standards established by the Construction Safety Order of the Division of Industrial Safety, the plan shall be prepared by a Civil or Structural Engineer registered by the State of California. The Inspector will confirm that a Registered Engineer has prepared the plan.

All excavations shall be shored in accordance with the California Department of Industrial Relations Construction Safety Orders, Article 6, Paragraph 1541, Trenches, Section e, Trench Shoring Systems, and all other related Sections.

7.06 EXCAVATION FOR STRUCTURES

Except as otherwise dictated by construction conditions, the excavation shall be of such dimensions as to allow for the proper installation and removal of concrete forms, or precast slabs and panels, and to permit the construction of the necessary pipe connections. Care shall be taken to ensure that the excavation does not extend below established grades. If the excavation is made below such grades, the resulting excess excavation shall be filled in with sand or graded gravel, deposited in horizontal layers not more than six inches (6") in thickness after being compacted, and shall be moistened to within two percent (2%) of the optimum moisture content required for compaction of that soil. After being conditioned to have the required moisture content, the layers shall be compacted in accordance with Section 7.12(B).

7.07 SURPLUS EXCAVATION MATERIAL

All surplus excavation material shall be removed from the jobsite and disposed of properly. If the surplus excavation is disposed of on private property, written permission shall be obtained from the owner and a copy given to the Department.

7.08 BLASTING

In general, blasting will be allowed in order to expedite the work if a permit by the local authority having jurisdiction is granted. All explosives and appurtenances shall be transported, handled, stored, and used in accordance with the laws of the local, state, and federal governments as applicable.

7.09 DEWATERING

All pipe trenches or structure excavation shall be kept free from water during pipe laying and other related work. The method of dewatering shall provide for a completely dry foundation at the final lines and grades of the excavation. All water shall be disposed of in a suitable manner without being a menace to public health or causing public inconvenience. No water shall be drained into other work being completed or under construction.

The dewatering operation shall continue until such time as it is safe to allow the water table to rise in the excavations. Pipe trenches shall contain enough backfill to prevent pipe flotation. When pipe is laid in a casing or tunnel longer than thirty (30) pipe diameters, the pipe inside the casing or tunnel shall be secured so flotation does not occur when the pipe is empty.

Water shall not be allowed to rise in the excavation until the concrete has set a minimum of twenty-four (24) hours, and the forms have been removed. Water shall not be allowed to rise unequally against unsupported structural walls.

7.10 FOUNDATIONS ON UNSTABLE SOIL

If the bottom of the excavation is soft or unstable and, in the opinion of the Department, cannot satisfactorily support the pipe or structure, a further depth and width shall be excavated and refilled to six inches (6") below grade with bedding material suitably densified to provide a firm foundation for the pipe or structure.

7.11 PIPE BEDDING

A. Installation of Bedding and Pipe: After completion of the trench excavation and proper preparation of the foundation, pipe shall be laid a minimum of six inches (6") above trench bottom on sand bags adjacent to pipe bells before placement of bedding material. As an alternative, a minimum of six inches (6") of sand bedding material may be placed on the trench bottom for support under the pipe with bell holes dug deep enough to provide a minimum of two inches (2") of clearance between the bell and bedding material. All pipe shall be installed in such a manner as to ensure full support of the pipe barrel over its entire length.

The minimum limits of bedding shall be from six inches (6") below the bottom of the pipe to six inches (6") above the top of the pipe. Approved backfill may then be installed to the ground line. See Section 7.12 of these Standards for backfill and compaction of backfill.

Sand shall be water densified by flooding when installing ductile iron pipe, and by flooding or jetting when installing steel pipe, prior to backfilling.

B. Bedding Material: The bedding material shall be 3/4 sack sand-cement slurry, or clean, well-graded, washed, concrete sand with an electrical resistivity of not less than 10,000 ohm per cubic centimeter and shall conform to Subsection 200-1.5.3 of the Standard Specifications for Public Works Construction, as last revised. When slurry is used, the pipeline shall be laid on sandbags to ensure a minimum of six inches of slurry under and around the pipe. The Department reserves the right to specify the type of bedding material to be used at any time.

7.12 BACKFILL AND COMPACTION

A. Pipes: Backfill shall be the fill placed above the bedding. All backfill, except that within State Highways, shall be placed as specified in Subsection 306-1.3.2 or 306-1.3.3, and compaction requirements shall be in accordance with Subsection 306-1.3.4 of the Standard Specifications for Public Works Construction. Backfill within State Highways shall be in accordance with Caltran's latest specifications.

Excavations performed under permit by the City of Los Angeles within the roadway portion of all paved streets and alleys shall be backfilled with 3/4 sack sand-cement slurry, unless otherwise permitted by the City Engineer.

The backfill material on unpaved streets shall be suitable native soil, suitable sand, or sand-cement slurry. Suitable native soil shall consist of material free of organics, rubbish, debris, and other objectionables. Sand-cement slurry shall contain 3/4 of a sack of Portland cement to one cubic yard of washed concrete sand with sufficient water to facilitate placement.

Backfilling shall be conducted at all times in a manner to prevent damage to the pipe to prevent mixing of bedding and backfill material or its coating and shall be kept as close to the pipe laying operation as possible.

B. Structures: Backfill for structures shall be from the subgrade of the structure to ground level on dirt surfaces or bottom of base layer on paved surfaces. Compaction, material, and other requirements shall be the same as for backfill for pipes.

7.13 CLEANUP

Upon completion of the Main Extension, all rubbish, unused materials, concrete forms and other like material shall be removed from the jobsite. All excess excavation shall be disposed of properly and the areas shall be left in a state of order and cleanliness.

7.14 SURFACE RESTORATION

A. Unsurfaced Areas: All surface cuts shall be restored to a condition equal to that prior to construction. All streets shall be restored in accordance with the regulations and requirements of the agency having control or jurisdiction over the street, roadway, or easement.

B. Surfaced Areas: All surface cuts shall be, as a minimum, restored to a condition equal to that prior to construction. All streets shall be restored in accordance with the regulations and requirements of the agency having control or jurisdiction over the street, roadway, or easement.

C. <u>Easements, Cultivated or Agricultural Areas</u>: In easements, cultivated or agricultural areas, topsoil to a depth of eight inches (8") shall be removed from the area of general disturbance and stockpiled. After installation of all pipelines, appurtenances and structures, and completion of all backfill and compaction, the stockpiled topsoil shall be redistributed evenly over all disturbed areas. Care should be taken to conform to the original ground contour or final grading plans.

CHAPTER 8

PIPE INSTALLATION

8.01 APPROVAL BY THE DEPARTMENT

Throughout these Standards, many handling and installation procedures, tools, equipment, and materials require approval by the Department. Approval by the Department is used solely as a means to ensure quality control and safety, and in no manner shall it render the Department liable for any injuries suffered or equipment damaged. Safety of workers shall be provided as required by the California Occupational Safety and Health Administration (Cal-OSHA).

8.02 HANDLING OF MATERIALS

Pipe and fittings shall be loaded and unloaded by lifting so as to avoid shock or damage. Under no circumstances shall such material be dropped. If, however, any part of the coating or lining is damaged, the replacement or repair of the damaged pipe shall be done to the satisfaction of the Department. Any pipe or fittings that are not acceptable to the Department shall be removed from the jobsite immediately. All pipe handling equipment and pipe handling methods shall be approved by the Department.

8.03 PREPARATION AND INSPECTION OF PIPE AND FITTINGS FOR INSTALLATION

Before placing pipe in the trench, each pipe length or fitting shall be thoroughly cleaned of all foreign material, kept clean thereafter, and carefully examined for cracks and other defects before installation. Bell ends and spigot ends are to be examined with particular care.

8.04 PIPE JOINT LUBRICANT

Joint lubricant shall be as supplied by the pipe manufacturer and approved by the Department. Joint lubricant shall be nontoxic and water soluble.

8.05 CUTTING AND FITTING OF PIPE

Pipe shall be cut, whenever necessary, to conform to location of fittings, line, or grade. All cuts shall be straight and true, and made in a workmanlike manner so as to leave a smooth end without damaging the pipe. The cut ends of pipe shall have all burrs removed and be lightly rasped or filed. All tools used in cutting pipe shall be approved by the Inspector.

POWER-DRIVEN SAWS WITH ABRASIVE DISCS (MASONRY BLADES) SHALL NOT BE USED FOR DRY CUTTING OR BEVELING ASBESTOS-CEMENT PIPE IN RECOGNITION OF EFFORTS TO REDUCE THE INCIDENCE AND CORRESPONDING DANGER OF AIRBORNE PIPE FRAGMENTS WHEREVER CUTTING IS NECESSARY.

8.06 PIPE ALIGNMENT AND GRADE

In laying pipe, the intent is to lay and set line and grade within a tolerance of three inches (3") plus or minus. On relatively level ground, the intent is to lay to grade. Fittings, valves and hydrants shall be installed at specified locations and elevations.

When laying pipe on curves, the intent is to lay to the alignment. The pipe shall be kept in alignment by placing all the joints on the curve. When laying ductile iron pipe, short lengths of pipe or eleven and one quarter (11-1/4) degree bends shall be used as necessary to accomplish the curvature without exceeding individual joint deflections specified by the pipe manufacturer. When laying steel pipe, specified alignment may be accomplished by pulling joints, trimming spigots, using elbows, and using short lengths of pipe in accordance with Sheet 10 of the Standard Drawings.

The cover on pipes smaller than twelve inches (12") in diameter shall be not less than thirty inches (30") nor more than forty-two inches (42"); and on pipe twelve inches (12") or larger in diameter, the cover shall be not less than thirty-six inches (36") nor more than forty eight inches (48"). Cover shall be measured to nearest gutter flow line grade. If difficulties arise when crossing substructures, deviations from cover limits will be permitted in accordance with Sheet 7 of the Standard Drawings.

Any changes in alignment and grade shall be authorized by the Department and shall be accomplished by the installation of additional fittings. Pulling of joints is permitted only when installing pipe where the finished surface has horizontal or vertical curves.

Pipe shall be laid with bell ends facing the direction of laying, unless directed otherwise by the Inspector.

8.07 DEVIATION FROM ALIGNMENT AND GRADE OCCASIONED BY OTHER STRUCTURES

Whenever obstructions not shown on the plans interfere to such an extent that an alteration in the plans is required, the Department shall have the authority to determine the best method of correction. The Department will request the plans to

be modified and order a deviation from line and grade, arrangements may be made with the owners of the structure for its removal, relocation, or reconstruction. If the extent of the plan modifications require a revised permit, the modified plans shall be submitted to the Department for approval.

8.08 TEMPORARY BULKHEADS

Whenever the installed pipe is left unattended, temporary plugs shall be installed at all openings. Temporary plugs shall be watertight and designed to prevent children and animals from entering the pipe. All temporary plugs shall be approved by the Department.

8.09 EXCAVATION, BEDDING AND BACKFILL

See Chapter 7 of these Engineering Standards for all specifications on earthwork.

8.10 DUCTILE IRON PIPE

A. Push-on Joint: Immediately before joining two lengths of ductile iron pipe, the inside of the bell, the outside of the spigot end, and the rubber gasket shall be thoroughly cleaned to remove oil, dirt, grit, excess coating, and other foreign matter. The rubber gasket shall be flexed inward and inserted in the gasket recess of the bell socket. Caution shall be exercised to ensure the correct type of gasket is used.

A thin film of gasket lubricant shall be applied to either the inside face of the gasket, or the spigot end of the pipe being inserted, or both.

The spigot end of the pipe shall be placed in the bell end with care to prevent the joint from contacting the ground. The joint shall be completed by slowly and steadily pushing the pipe home. Pipe furnished without a depth mark shall be marked before assembly to assure insertion to full depth of the joint. The spigot end of field-cut pipe lengths shall be filed, or ground to resemble the spigot end of such pipe as manufactured.

B. Flanged Joint: Before joining flanged joint fittings, all parts and jointing surfaces shall be thoroughly cleaned to remove oil, dirt, grit, excess coating, and other foreign matter.

Prior to bolting flanges, connecting fittings or pipe shall be properly supported to reduce stress on the flanges. With the flanges properly aligned, the gasket

shall then be slipped into position, and secured in position by inserting the bolts through the flanges. All nuts shall be turned finger tight and tightened in a staggering sequence by a wrench.

C. Caulk Joint: Before joining caulk joint fittings, all parts and jointing surfaces shall be thoroughly cleaned to remove grit, excess coating, and other foreign matter.

Caulk joints, where required, shall be constructed with the lead embedded in the joint a minimum of two and one-half inches (2½"). Rubber or paper packing shall be packed tightly in the bottom of the joint. The joint shall be poured with molten lead in one continuous pour. After the poured lead has cooled, all clay or material used as a mold shall be removed from the pipe, and the lead shall be caulked a minimum of four (4) passes to ensure a secure, watertight joint. Lead shall meet the requirements of the Standard Specifications.

D. Mechanical Couplings: When installing mechanical couplings, care shall be taken to ensure that the connecting pipe ends, couplings, and gaskets are clean and free of all dirt and foreign matter with special attention given to the contact surfaces of the pipe, gaskets, and couplings. These couplings shall be assembled and installed in conformity with the recommendations and instructions of the coupling manufacturer. The two sections of pipe connected by the mechanical coupling shall be separated by a minimum of one inch. Coupling bolts shall be tightened so as to secure a uniform annular space between the follower rings and the body of the pipe and all bolts tightened approximately the same amount. Diametrically opposite nuts shall be tightened progressively and evenly. Final tightening shall be done with a torque-limiting wrench set for the torque recommended by the coupling manufacturer.

Mechanical couplings installed within sixty feet (60') of fittings subjected to unbalanced hydrostatic forces, shall be restrained by using yokes and rods furnished by the Department.

E. Polyethylene Encasement: Ductile iron pipe and all appurtenances shall be wrapped with polyethylene tubes. The pipe must be clean prior to installation of the polyethylene tubes. The polyethylene encasement shall prevent contact between the pipe and bedding material.

Polyethylene pipe wrap material shall be applied to line pipe and appurtenances in the manner shown on

Sheet 11 of the Standard Drawings. The polyethylene shall be clear colored, have a minimum wall thickness of eight (8) mils, and shall conform to the Materials Specifications. A 10-mil thick dielectric pressure-sensitive tape shall be used to close seams or hold overlaps. Damage to polyethylene pipe wrap in the trench prior to and during backfill shall be repaired to the satisfaction of the Department. Exposure to sunlight of the polyethylene pipe wrap shall be minimized to prevent deterioration.

8.11 STEEL PIPE

Installation of steel pipe and appurtenances shall be in accordance with the AWWA M11 Steel Pipe Design Manual, as last revised, except where noted differently herein.

A. Welded Joint: Field-welded joints and connections shall be performed in accordance with the procedure of the American Welding Society by operators currently qualified under the Standard Qualification Procedure of the American Welding Society, as last revised. The Department's Inspector shall have the right to require any welder to qualify by making tests at a designated Department yard at no cost to the Department. The Inspector shall have the right at any time to call for and witness the making of test specimens by any welder.

B. Flanged Joint: Before joining flanged joint fittings, all parts and jointing surfaces shall be thoroughly cleaned to remove rust-preventing grease, oil, grit, burrs, excess coating, and other foreign matter.

   Prior to bolting flanges, connecting fittings and pipe shall be properly supported to reduce stress on the flanges. With the flanges properly aligned, the gasket shall then be slipped into position, and secured in position by inserting the bolts through the flanges. All nuts shall be turned finger tight and tightened in a staggering sequence by a wrench.

C. Coating: Field-welded joints, holidays, connections, gate valves, mechanical couplings and all other fittings shall be coated in accordance with AWWA C203 standards (hot-applied, coal-tar enamel) or AWWA C209 standards (cold-applied, tape-coating, type I or II), and AWWA C205 standards (reinforced cement-mortar coating), as last revised. As an alternative, field-welded joints and mechanical couplings may be fitted with heat shrink sleeves made for corrosion protection that conform to the Materials Specifications.

D. Mechanical Couplings: Mechanical couplings installed on steel main extensions shall be non-insulating type and shall be bonded in accordance with Sheets 27A thru 27D of the Standard Drawings. When installing mechanical couplings, care shall be taken to ensure that the connecting pipe ends, couplings, and gaskets are clean and free of all dirt and foreign matter with special attention given to the contact surfaces of the pipe, gaskets, and couplings. These couplings shall be assembled and installed in conformity with the recommendation and instructions of the coupling manufacturer. Coupling bolts shall be tightened so as to secure a uniform annular space between the follower rings and the body of the pipe and all bolts tightened approximately the same amount. Diametrically opposite nuts shall be tightened progressively and evenly. Final tightening shall be done with a torque-limiting wrench set for the torque recommended by the coupling manufacturer.

Anchor boxes conforming to Sheet 14 of the Standard Drawings shall be installed on all mechanical couplings.

E. Insulating Joints: Insulating joints, in general, shall be installed between dissimilar metals, every two thousand five hundred feet (2500') of steel main and between old steel main and new steel main. Pre-assembled insulating joints shall be purchased from the Department. Special care shall be exercised during the installation of these fittings to prevent electrical conductivity across the insulating joint.

F. Cathodic Protection: All steel water mains shall be placed under a galvanic cathodic protection system installed and tested by a Corrosion Engineer registered by the State of California, a Corrosion Specialist certified by the National Association of Corrosion Engineers, or someone under the direct supervision of a Registered Corrosion Engineer. The Department retains the option of installing and testing this system, the cost of which shall be borne by the Applicant.

The following guidelines shall be observed when installing and testing a cathodic protection system. See also Sheets 27A thru 27D of the Standard Drawings:

1. The Contractor shall protect the cathodic protection system including, but not limited to, insulating joints, anodes, wire leads, and test stations.

2. Two-inch (2") and smaller service laterals connected to steel pipe shall be installed and coated as shown on Sheet 50 of the Standard Drawings.

3. Test stations shall be located, in order of preference, adjacent to fire hydrants, adjacent to line valves, and adjacent to insulating joints.

4. Test station locations shall be recorded.

5. Test station wire leads shall be properly identified using N, S, E, W directions and capable of allowing current readings using a 0.01 ohm, 6 amp. capacity shunt installed on the terminal block.

6. Test station wire leads shall have a minimum of four feet (4') of excess wire measured from the gate cap.

7. Anodes shall be 32-lb. Dow Galvo Pack, or equal.

8. Anodes shall be installed in accordance with the following conditions:

   a. A minimum distance of two feet (2') clear from the water main.

   b. A minimum distance of five feet (5') clear from each other.

   c. Vertically or horizontally.

   d. On either or both sides of the water main.

   e. Watered prior to being covered with soil.

   f. Nested against, and covered with a minimum of six inches (6") of native soil, and a minimum cover of three feet (3') from finished grade.

9. Bond wire shall be 8 gauge, THHN, 600V, blue solid.

10. Wire leads shall be 12 gauge, THHN, 600V, blue stranded.

11. All noninsulating mechanical couplings connecting steel pipe to steel pipe shall be bonded across and through.

12. Wires shall be connected to steel pipe walls using a thermite welding method.

13. Connection of two (2) wires shall be done by using solderless crimp connectors. Where three (3) or more wires are connected, a split bolt connector or a "Direct Bury Splice Kit" may be used.

14. All wire splices shall be tightly wrapped with a minimum of four overlapping layers of electrical plastic tape under a waterproof electrical coating.

15. Wire leads shall be taped together every three feet (3') to form a wiring harness. The harness shall be strategically located to minimize possible future damage to the wire leads. Minimum depth must equal the pipe cover.

16. The joints of cement-mortar coated and enamel/dielectric undercoated steel main shall be coated with a dielectric coating under a minimum one-inch (1") thick cement-mortar coating.

17. The Contractor shall coat all bare portions of steel pipe and appurtenances with a dielectric coating.

18. The dielectric coating on welded joints shall overlap the original coating by a minimum of two inches (2") on each end.

19. Insulating joints shall have the dielectric coating extended a minimum of two (2) pipe diameters onto adjacent non-steel pipe.

20. Fittings that connect steel pipe to A.C. pipe shall be fully coated with a dielectric coating.

21. All field enameling or wrapping shall be tested by the Contractor using an electrical holiday detector in accordance with AWWA C203 Section 2.14.12 for enameling and AWWA C209 Section 4.4 for wrapping. Any flaws or holidays found shall be repaired by the Contractor in accordance with AWWA C203 Section 2.15 for enameling and AWWA C209 Section 4.4 for wrapping.

22. The cement-mortar coating reinforcing wire shall:

    a. Not come in contact with the steel pipe wall.

    b. Overlap the original cement-mortar coating a minimum of two inches (2") on each edge.

23. The cement-mortar coating on welded joints shall overlap the cement-mortar coating reinforcing wire by a minimum of two inches (2") on each end.

24. As an alternative, welded steel joints and mechanical couplings on welded steel pipe may be protected with "Raychem Heat Shrink Joint Protection Sleeve GAP 7" and "Raychem Thermofit Dresser Sleeve", respectively, or equal.

25. The following tests shall be performed and certified by the Corrosion Engineer:

    a. Test soil resistivity at 500 foot intervals, all street intersections and cul-de-sacs, and both sides of cut and fill areas.

    b. Test the cathodic protection system for pipe-to-soil values and current output at all cathodic protection stations, and submit a report including the data to the Department.

    c. Test the cathodic protection system to ensure a minimum theoretical life of 75 years (add as many anodes as necessary to conform).

    d. Test all insulating joints to ensure electrical isolation.

    e. Test all service laterals to ensure no shorts are present.

26. The Corrosion Engineer shall prepare and submit for Department approval an accurate as-constructed record of the cathodic protection system installed. As-constructed record shall have all test stations and anodes located and referenced to the centerline of the main and the insulating joints.

8.12 INSTALLATION OF JOINT-RESTRAINT FITTINGS

Anchor boxes conforming to Sheet 14 of the Standard Drawings shall be provided on all mechanical couplings installed on steel main extensions.

Lock-joint gaskets (U.S. Pipe "Field Lok" or equivalent) or yokes and rods shall be installed for the entire length of ductile iron fire hydrant, fire service, and domestic service laterals and within ten (10) lineal feet of all horizontal 11-1/4 degree bends and sixty (60) lineal feet of all other bends, plugs, blow-offs, tees, crosses, and tapping sleeves.

8.13 INSTALLATION OF VALVES

Valves shall be handled in a manner which prevents injury or damage. Valves shall be operated prior to installation to ensure good operating condition. Valves shall be set with the valve stems plumb and be joined to the pipe in the manner previously specified for cleaning, laying, and joining flanged and push-on joints. Valves installed in ductile iron main extensions shall be wrapped with polyethylene encasement material as instructed on Sheet 11 of the Standard Drawings. Valves installed on steel main extensions shall be coated in accordance with Section 8.11(C).

Line valves shall be located at intersecting points of mains, at intersecting points of property line extended and main, or adjacent to fire hydrant laterals. Any deviations from this shall be at the sole discretion of the Department.

8.14 INSTALLATION OF VALVE STANDPIPES

A valve standpipe and gate cap shall be provided for every valve not installed above ground or in a vault. Twelve-inch (12") and smaller line valves shall be provided with a six-inch (6") cast iron gate cap, steel split sleeve, and steel standpipe. Eight-inch (8") and twelve-inch (12") gate valves also require a steel standpipe bottom. Gate valve caps, split sleeves, standpipe bottoms, and standpipes shall be obtained from the Department. The standpipe shall be electrically isolated from the valve, shall not bear, transmit shock or external loads to the valve, and shall be centered and plumb over the wrench nut of the valve, with the gate cap set to finished grade or an elevation determined by the Department. See Sheet 13 of the Standard Drawings.

8.15 INSTALLATION OF FITTINGS

All fittings shall be in compliance with the Materials Specifications. Fittings shall be set and joined in the manner described in Sections 8.10 and 8.11 of these Standards. The use of "wyes" in main extensions is strictly prohibited.

All fittings installed in ductile iron main extensions shall be wrapped with polyethylene encasement material as instructed on Sheet 11 of the Standard Drawings. All fittings installed in steel main extensions shall be coated in accordance with Section 8.11(C).

8.16 INSTALLATION OF TAPPING SLEEVES

A tapping sleeve or clamp is used to make a "wet tap" connection to an existing main without placing the main out of service.

Tapping sleeves or clamps may be installed side-by-side when specifically approved by the Department. A two-foot (2') minimum space is required between adjacent taps. An example of such an installation would be side-by-side fire service and domestic service laterals that serve a building. The use of two tapping sleeves, either side-by-side or back-to-back, as a substitute for a cross is strictly prohibited.

Tapping sleeves and service laterals shall be wrapped with polyethylene encasement material as instructed on Sheet 11 of the Standard Drawings.

Four-inch (4") and larger tapping sleeves require pouring of a concrete thrust block behind the sleeve to prevent possible damage to the main from pressure shocks which develop as valves are first opened.

8.17 INSTALLATION OF BLOW-OFFS

In all installations where the main is permanently dead-ended, such as a cul-de-sac, a blow-off assembly shall be installed. Where the main is temporarily dead-ended, for example the boundary of a subdivision, a blow-off shall be installed unless a fire hydrant, which can serve as a blow-off, is located at the main's temporary end.

The standard required blow-off assembly for twelve-inch (12") and smaller mains shall be a two-inch (2") as shown on Sheets 15 and 16 of the Standard Drawings. Under special conditions, such as a long run with few taps, a larger blow-off may be required.

8.18 CRITERIA FOR THE SEPARATION OF WATER MAINS AND SANITARY SEWERS

The contents of this section are excerpts from the State of California, Human and Welfare Agency, Department of Health Services' "Criteria for the Separation of Water Mains and Sanitary Sewers" dated April 5, 1983.

A. Basic Separation Standards: The "California Waterworks Standards" sets forth the minimum separation requirements for water mains and sewer lines. These

standards, contained in Section 64630, Title 22, California Administrative Code, specify:

(c) (1) Parallel Construction: The horizontal distance between pressure water mains and sewer lines shall be at least ten feet (10').

(2) Perpendicular Construction (Crossing): Pressure water mains shall be at least one foot (1') above sanitary sewer lines where these lines must cross.

(d) Separation distances specified in (c) shall be measured from the nearest edges of the facilities.

(e) (2) Common Trench: Water mains and sewer lines must not be installed in the same trench.

When water mains and sanitary sewers are not adequately separated, the potential for contamination of the water supply increases. Therefore, when adequate physical separation cannot be attained, an increase in the factor of safety should be provided by increasing the structural integrity of both, the pipe materials and joints.

B. Exceptions to Basic Separation Standards: Local conditions, such as available space, limited slope, existing structures, etc., may create a situation where there is no alternative but to install water mains or sewer lines at a distance less than that required by the Basic Separation Standards. In such cases, alternative construction criteria as specified in Section D should be followed, subject to the special provisions in Section C.

Water mains and sewers of twenty-four inches (24") diameter or greater may create special hazards because of the large volumes of flow. Therefore, installations of water mains and sewer lines twenty-four inches (24") diameter or larger should be reviewed and approved by the health agency prior to construction.

C. Special Provisions:

1. The Basic Separation Standards are applicable under normal conditions for sewage collection lines and water distribution mains. More stringent requirements may be necessary if conditions, such as high groundwater exist.

2. Sewer lines shall not be installed within twenty-five feet (25') horizontally of a low head (five (5) psi or less pressure) water main.

3. New water mains and sewers shall be pressure tested where the conduits are located ten feet (10') apart or less.

4. In the installation of water mains or sewer lines, measures should be taken to prevent or minimize disturbances of the existing line. Disturbance of the supporting base of this line could eventually result in failure of this existing pipeline.

5. Special consideration shall be given to the selection of pipe materials if corrosive conditions are likely to exist. These conditions may be due to soil type and/or the nature of the fluid conveyed in the conduit, such as a septic sewage which produces corrosive hydrogen sulfide.

6. Sewer Force Mains:

   a. Sewer force mains shall not be installed within ten feet (10') horizontally of a water main.

   b. When a sewer force main must cross a water line, the crossing should be as close as practical to the perpendicular. The sewer force main should be at least one foot (1') below the water line.

   c. When a new sewer force main crosses under an existing water main, all portions of the sewer force main within ten feet (10') horizontally of the water main shall be enclosed in a continuous sleeve.

   d. When a new water main crosses over an existing sewer force main, the water main shall be constructed of pipe materials with a minimum rated working pressure of two hundred (200) psi or equivalent pressure rating.

D. <u>Alternate Criteria for Construction</u>: The construction criteria for sewer lines or water mains where the Basic Separation Standards cannot be attained are shown in Sheets 8 and 9 of the Standard Drawings. There are two situations encountered:

Case 1 -- New sewer line -- new or existing water main.

Case 2 -- New water main -- existing sewer line.

For Case 1, the alternate construction criteria apply to the sewer line.

For Case 2, the alternate construction criteria may apply to either or both the water main and sewer line.

The construction criteria should apply to the house laterals that cross <u>above</u> a pressure water main but not to those house laterals that cross <u>below</u> a pressure water main.

<u>Case 1</u>: <u>New Sewer Being Installed</u> (Sheets 8 and 9 of the Standard Drawings)

<u>Zone</u>	<u>Special Construction Required for Sewer</u>
A	Sewer lines parallel to water mains shall not be permitted in this zone without approval from the responsible health agency and water supplier.
B	A sewer line placed parallel to a water line shall be constructed of: 1. Extra strength vitrified clay pipe with compression joints. 2. Class 4000, Type II, asbestos-cement pipe with rubber gasket joints. 3. Plastic sewer pipe with rubber ring joints (per ASTM D3034) or equivalent. 4. Cast or ductile iron pipe with compression joints. 5. Reinforced concrete pressure pipe with compression joints (per AWWA C302-74).
C	A sewer line crossing a water main shall be constructed of: 1. Ductile iron pipe with hot dip bituminous coating and mechanical joints. 2. A continuous section of Class 200 (DR 14 per AWWA C900) plastic pipe or equivalent, centered over the pipe being crossed.

Zone Special Construction Required For Sewer

3. A continuous section of reinforced concrete pressure pipe (per AWWA C302-74) centered over the pipe being crossed.

4. Any sewer pipe within a continuous sleeve.

D A sewer line crossing a water main shall be constructed of:

1. A continuous section of ductile iron pipe with hot dip bituminous coating.

2. A continuous section of Class 200 (DR 14 per AWWA C900) plastic pipe or equivalent, centered on the pipe being crossed.

3. A continuous section of reinforced concrete pressure pipe (per AWWA C302-74) centered on the pipe being crossed.

4. Any sewer pipe within a continuous sleeve.

5. Any sewer pipe separated by a ten-foot by ten-foot, four-inch thick reinforced concrete slab.

Case 2: New Water Mains Being Installed(Sheets 8 and 9 of the Standard Drawings)

Zone

A No water mains parallel to sewers shall be constructed without approval from the health agency.

B If the sewer paralleling the water main does not meet the Case 1, Zone B, requirements, the water main shall be constructed of:

1. Ductile iron pipe with hot dip bituminous coating.

2. Dipped and wrapped one-fourth-inch-thick welded steel pipe.

3. Class 200, Type II, asbestos-cement pressure pipe.

4. Class 200 pressure rated plastic water pipe (DR 14 per AWWA C900) or equivalent.

Zone

5. Reinforced concrete pressure pipe, steel cylinder type, per AWWA C300-74 or C301-79 or C303-70.

C If the sewer crossing the water main does not meet the Case 1, Zone C requirements, the water main shall have no joints in Zone C and be constructed of:

1. Ductile iron pipe with hot dip bituminous coating.

2. Dipped and wrapped one-fourth-inch-thick welded steel pipe.

3. Class 200 pressure rated plastic water pipe (DR 14 per AWWA C900) or equivalent.

4. Reinforced concrete pressure pipe, steel cylinder type, per AWWA C300-74 or C301-79 or C303-70.

D If the sewer crossing the water main does not meet the requirements for Zone D, Case 1, the water main shall have no joints within four feet from either side of the sewer and shall be constructed of:

1. Ductile iron pipe with hot dip bituminous coating.

2. Dipped and wrapped one-fourth-inch-thick welded steel pipe.

3. Class 200 pressure rated plastic water pipe (DR 14 per AWWA C900) or equivalent.

4. Reinforced concrete pressure pipe, steel cylinder type, per AWWA C300-74 or C301-79 or C303-70.

E. Notes and Definitions : The following notes and definitions apply to this section only:

1. HEALTH AGENCY: The Department of Health Services. For those water systems supplying fewer than two hundred (200) service connections, the local health officer shall act for the Department of Health Services.

2. WATER SUPPLIER: "Person operating a public water system" or "supplier of water" means any person who owns or operates a public water system.

3. LOW HEAD WATER MAIN: Any water main which has a pressure of five (5) psi or less at any time at any point in the main.

4. Dimensions are from outside of water main to outside of sewer line or manhole.

5. COMPRESSION JOINT: A push-on joint that seals by means of the compression of a rubber ring or gasket between the pipe and a bell or coupling.

6. MECHANICAL JOINTS: Bolted joints.

7. RATED WORKING WATER PRESSURE OR PRESSURE CLASS: A pipe classification system based upon internal working pressure of the fluid in the pipe, type of pipe material, and the thickness of the pipe wall.

8. FUSED JOINT: The jointing of sections of pipe using thermal or chemical bonding processes.

9. SLEEVE: A protective tube of steel with a wall thickness of not less than one-fourth inch (1/4") into which a pipe is inserted.

10. GROUND WATER: Subsurface water found in the saturation zone.

11. HOUSE LATERAL: A sewer connecting the building drain and the main sewer line.

8.19 FIRE HYDRANTS

A. Installation: All hydrants shall be field staked for location and grade. Final location shall be in accordance with approved drawings, where possible. Fire hydrants shall be set so that the elevation of the center of the top section flange or the center of the threaded coupling is set at the finish grade of the ground or top of the curb. All hydrants shall stand plumb and be installed as indicated on Sheets 28A thru 28D, 29A, and 29B.

Each hydrant shall be connected to the street main by a six-inch (6") lateral. An independent six-inch (6") gate valve shall be installed on each fire hydrant

lateral adjacent to the connection fitting. All joints in the lateral shall be firmly restrained to each other.

B. Corrosion Protection: Corrosion protection shall be provided in accordance with Sections 8.10(E) and 8.11(F) of these Standards.

8.20 MISCELLANEOUS METALWORK AND PIPING

All fabrication shall be equal to the best practice in modern fabricating shops. Welding shall be performed by Department-approved operators currently qualified under the Standard Qualification Procedure of the American Welding Society, as last revised. All exposed welds shall be ground smooth, and all weld splatter shall be properly removed to the satisfaction of the Inspector.

Installations involving steel pipe shall have field-welded joints, gate valves, mechanical couplings, and all other fittings coated in accordance with AWWA C203 standards (hot-applied, coal-tar enamel) or AWWA C209 standards (cold-applied, tape-coating, type I or II) and AWWA C205 standards (reinforced cement-mortar coating), as last revised. As an alternative, field-welded joints and mechanical couplings may be fitted with heat shrink sleeves made for corrosion protection that conform to the Materials Specifications.

All metal exposed to weather shall be painted with a minimum of two coats each of red oxide primer and paint of the type and color specified on the plans or by the Inspector. Surfaces to be painted shall be cleaned of oil, grease, weld spatters, burrs, grit, dust or other objectionable surface irregularities. Copper, aluminum or galvanized pipe need not be painted, unless so directed by the Department.

All miscellaneous piping shall be installed in the best workmanlike manner. All threads on steel pipes shall be cut with sharp dies to standard depth, left clean cut, and tapered. Threaded pipe joints shall be properly sealed with an approved joint compound applied on the male threads only. When soldering copper tubing, the joint of the copper tubing shall be properly cleaned, flux applied, and soldered with lead-free solder, all applied in the best workmanlike manner. As a corrosion mitigation measure, soldered tubing shall be flushed with water to remove any flux residue.

8.21 THRUST BLOCKS

A. Installation: Concrete thrust blocks shall be provided for all bends and fittings subjected to an unbalanced hydrostatic force. Care shall be taken not to block outlets or to cover bolts, nuts, clamps or other fittings, or to make them inaccessible. Ductile iron pipe shall be polyehtylene encased prior to installing thrust blocks. If a large thrust block is to be poured, it shall be separated into sections by a suitable material. Sheet 12 of the Standard Drawings show sizes and shapes of thrust blocks. If, in the opinion of the Department, the soil-bearing capacity is not sufficient to provide adequate restraint based on minimum bearing areas shown on the Standard Drawings, then the minimum bearing area shall be increased to a size that will ensure adequate restraint. In every instance, the thrust block shall bear against undisturbed soil.

Before placing concrete, all equipment for mixing and transporting the concrete shall be clean. All debris or water shall be removed from the place to be occupied by the concrete. Concrete shall be placed only in the presence of the Inspector unless inspection has been waived prior to the placement.

B. Form Work: All forming for concrete thrust blocks shall be done by bulkheading around the shape of the thrust block with wood, burlap, or reinforced paper sacks filled with sand. Sacks shall be of a size easily handled when full, and shall be left in place in the trench. Wood forms shall be removed before backfilling.

If the main must be placed into service immediately, wood may be used to form up thrust blocks. Wood forms shall be of such design as to support the thrust until the concrete has set and shall not be considered a substitute for the concrete thrust block.

No horizontal struts or braces required for trench shoring shall remain in the concrete thrust blocks. Prior to placing concrete, the forms and trench wall shall be inspected and approved by the Inspector.

When concrete is deposited against the ground without the use of forms, the ground shall be thoroughly moistened or other provisions made to prevent the ground from absorbing water from the concrete.

C. Minimum Curing Time: Newly placed concrete shall be allowed to set undisturbed for a minimum of twenty-four (24) hours.

D. Compaction of Fill Over Thrust Blocks: Backfill may be placed over thrust blocks after the surface has set sufficiently to resist the weight of the backfill. However, no tamping or compacting shall be allowed above the thrust block for a minimum of twenty-four (24) hours after placement.

8.22 CONCRETE STRUCTURES

A Form Work: Forms shall conform to shapes, lines and dimensions of the members as shown on the drawings. Form work shall also be in compliance with applicable local building and construction codes. Embedded metal ties with snap-off ends shall be used for internal form ties. Use of ordinary wire ties will not be allowed, nor will withdrawal of form ties through the walls be permitted.

Forms may be made of wood or metal, subject to the approval of the Department. Where the finished concrete surface will be exposed, the forms shall be void of any irregularities, such as knotholes and chips.

Before concrete is placed, all forms shall be carefully cleaned, all reinforcement securely tied, and all necessary openings blocked out. Any material necessary for the support of piping and valves shall be supplied by the Contractor.

Forms shall not be disturbed until concrete has hardened sufficiently to permit their removal with safety. The removal of forms shall be carried out in such a manner as to ensure the safety of the structure. Supervisory personnel shall be present at the time the forms are removed, and shall be responsible for the safety of this operation.

B. Workability of Concrete: Concrete shall be of a consistency and composition that it can be worked readily into the corners and angles of the forms and around the reinforcement without permitting the materials to segregate, or free water to collect on the surface. No chlorides shall be added to the concrete mix.

C. Mixing and Placing Concrete: Before placing concrete, all equipment for mixing and transporting concrete shall be clean. All debris or water shall be removed from the places to be occupied by the concrete. Wooden forms shall be thoroughly wetted or oiled. No concrete

shall be placed until forms, reinforcing steel, and cleanup have been approved by the Department.

Concrete shall be placed only in the presence of the Department Inspector unless inspection has been waived prior to the placement.

Concrete shall be conveyed from the mixer to the place of final deposit by methods which will prevent separation or loss of materials. All concrete placed shall have a temperature of at least 50° F (10° C), but not more than 90° F (32° C).

Concrete shall be deposited, as nearly as practicable, in its final position to avoid segregation due to rehandling or flowing. No concrete that has partially hardened or been contaminated by foreign materials shall be deposited, nor shall retempered concrete be used.

D. Finishing Concrete: All unformed surfaces shall be screeded and wood float-finished. Floor surfaces shall be roughened by light brooming following the wood float-finish.

After the form work is removed, the voids in all formed surfaces shall be filled with patching mortar and form ties cut back and dry packed if necessary.

E. Curing and Protecting Concrete: The finished concrete shall be protected for a period of three days and maintained at a temperature of not less than 50° F (10° C). Precaution must be taken during hot weather to prevent cracks due to thermal contraction. Newly placed concrete shall be allowed to set undisturbed for a minimum curing time of twenty-four (24) hours.

When concrete is deposited against the ground without the use of forms, the ground shall be thoroughly moistened or other provisions made to prevent the ground from absorbing water from the concrete.

Concrete shall be protected with a Department-approved curing membrane immediately after removal of the forms, or on completion of finishing of floors or slabs. White membrane shall be used on non-water-bearing surfaces where concrete is exposed to the direct rays of the sun. The membrane shall be a nontoxic type.

8.23 REINFORCING STEEL FOR CONCRETE STRUCTURES

A. Installation: Reinforcing steel shall be accurately formed to the dimensions indicated on the drawings. Bends in bars shall be made cold. Bars with kinks or bends not shown on the drawings shall not be used.

Splices shall be located where shown on the drawings. Splices at other locations shall be approved by the Design Engineer. Welded wire mesh shall be lapped one space and securely wired together. Before the reinforcement is embedded in concrete, the surfaces of the bars, and bar supports, shall be cleaned of heavy flaky rust, loose mill scale, dirt, grease, or other foreign substances which are objectionable. Reinforcement will be inspected for compliance with requirements as to size, shape, length, splicing position, and amount after it has been placed.

B. Placing of Reinforcing Steel: Reinforcing steel shall be accurately placed and secured in position by using annealed iron wire ties so that it will not be displaced during the placing of the concrete. Chairs, hangers, spacers, and other supports for reinforcement may be concrete, galvanized, or plastic coated metal, or other approved material.

Steel reinforcement shall be protected by the thickness of concrete indicated on the plans. Where not otherwise shown, the thickness of concrete over the reinforcement shall be as follows:

1. Where concrete is deposited against the ground without the use of forms, not less than three inches (3").

2. Where concrete is exposed to the weather, or exposed to the ground but placed in forms, not less than two inches (2") for bars more than five eight-inch (5/8") diameter and one and one-half inches (1-1/2") for bars five eight-inch (5/8") diameter or less.

3. In slabs and walls not exposed to the ground or to the weather, not less than three quarter inches (3/4").

4. In all cases, the thickness of concrete over the reinforcement shall be "clear" and at least equal to one and one-half (1-1/2) diameters that of the reinforcement bars.

8.24 HYDROSTATIC TESTING

No hydrostatic testing shall be made on any portion of the pipeline until field-placed concrete has had adequate curing time as defined for thrust blocks in Section 8.21 of these Standards.

The Department shall be notified twenty-four (24) hours in advance of testing. The main being tested shall not be restrained against the existing main or its appurtenances. Testing against shut gate valves is prohibited. All testing shall be made in the presence of the Department Inspector.

Only the following methods are acceptable for supplying potable water for hydrostatic testing:

1. Water may be taken from a nearby pressurized water source which has been previously disinfected, tested and accepted by the Department, such as a fire hydrant.

2. Water may be delivered to the site in a disinfected water truck having a minimum capacity of three hundred (300) gallons. The water truck shall be used exclusively for the transportation of potable water.

3. Any previously tested, disinfected and Department-accepted main which is pressurized and is to serve the new main extension may be tapped on the pressurized side of the closed valve.

In any event, the method of supplying water as well as the source of water for hydrostatic testing shall be certified and approved by the Department. Use of barrels, sanitary or otherwise, to supply water for hydrostatic testing is strictly prohibited.

The Department will not furnish the calibrated meter or the pump required for testing. The main shall be properly back-filled and shall be in a state of readiness for testing. All bulkheads, pumps, taps, and appurtenances necessary to fill the main and maintain the required pressure shall be in place. The main shall be filled with water at a rate which will not cause any surges or exceed the rate at which the air can be released. The main shall be subjected to a hydrostatic pressure of one and one-half (1-1/2) times the maximum static pressure at the point of testing and not less than one and one-quarter (1-1/4) times the maximum static pressure at the highest point along the test section by means of a continuously operating pump, equipped with a bypass valve for regulating pressure. The specified test

pressure shall be based on the elevation of the lowest point of the line or section under test and corrected to the elevation of the test gage.

All air in the main shall be properly purged. Where blow-offs or hydrants are not available or are not effective in purging air from the line, the Department shall require a tap to purge the main. The location and size of tap shall be at the Department's discretion.

The test pressure shall be maintained at plus or minus five (5) PSI for a period of two (2) continuous hours during which an examination of the main shall be made, and any leaks repaired. Any pipe or fitting found to be faulty shall be removed and replaced. No leakage shall be allowed through the bonnet of line valves. Any valve leaking through the bonnet shall be repaired in place or removed and replaced. Cutting and replacing pavement, excavating, and backfilling may all be necessary parts of locating and repairing leaks discovered by pressure testing of pipe.

After all visible leaks have been stopped, the full test-pressure shall be maintained for two (2) continuous hours. Leakage for steel pipe with welded joints shall not be allowed. Allowable leakage for ductile iron pipe shall not exceed the amount determined by the following formula:

$$L = SDP/133,200$$

L = Allowable leakage (gallons per hour)
S = Length of pipe tested (feet)
D = Nominal diameter of the pipe (inches)
P = Average test pressure during the test (PSI)

Testing against closed valves is prohibited. When fire hydrants are in the test section, the test shall be made against the closed fire hydrants.

Should testing show a leakage rate in excess of the rates computed, the main shall not be accepted. The main shall be repaired and retested as described in this Section until it meets the test requirements.

8.25 DISINFECTION

All main extensions will be disinfected by the Department before they are accepted by the Department. The Contractor shall install temporary valved inlets at points designated by the Inspector to enable disinfection of the mains.

Disinfection of the completed main installation shall be done after hydrostatic testing. Before filling the pipe with water, the pipe shall be clean and free of debris to the satisfaction of the Department's Inspector. The Department shall be notified at least forty-eight (48) hours prior to the desired disinfection time.

8.26 CONNECTIONS TO THE DEPARTMENT'S SYSTEM

A. Connections: Connections to the Distribution System are generally made by the Contractor. Connections shall be performed in a neat and workmanlike manner in accordance with Sheets 23 thru 26 of the Standard Drawings. The Department's Inspector shall be present at all times during construction of the connection. The connection shall be subject to approval by the Department. Under no circumstances shall a non-disinfected main, which cannot be isolated, be connected to a disinfected main.

The Department is not responsible for water tightness of its valves on existing facilities. If existing valves leak, the Department will assist in reducing the influx of water, but the Contractor shall use methods at his or her own disposal to work with the resulting leakage.

B. Operation of Valves: In connecting to the Department's system, it may be necessary to operate existing Department valves. All line valves in the Department's system shall be operated by Department personnel only. The Contractor shall give the Department at least forty-eight (48) hours' notice to arrange for operation of the valves. Both the Contractor and the Department's Inspector shall be present when the valves are operated.

C. Interruption of Service: The Contractor shall provide written notification twenty-four (24) hours in advance to all affected Department customers of temporary water outage on contractor-installed connections that cause interruption in service.

8.27 ACCEPTANCE AND RELEASE FOR WET TAPS

A main will be accepted by the Department and released for wet taps only when the following conditions have been met:

A. The main and all appurtenances have been installed to the satisfaction of the Department and all pertinent notes and measurements have been made.

B. The main has been successfully pressure tested to the requirements of Section 8.24.

C. Water Quality Division has disinfected and released the main for taps.

SIXTEEN-INCH (16") AND TWENTY- INCH (20")
SUPPLY MAINS

9.04 INSTALLATION

Installation of sixteen-inch (16") and twenty-inch (20") Supply Mains will generally be done by the Applicant or the Applicant's contractor. The Contractor shall be prequalified by the Department for the installation of sixteen-inch (16") and twenty-inch (20") pipe. As with four-inch (4") through twelve-inch (12") mains, the Department reserves the right to install sixteen-inch (16"), and twenty-inch (20") Supply Mains when it is in the best interest of the Department. This determination is solely at the discretion of the Department. The Applicant shall pay all costs for extending mains whether installed by its contractor or by the Department.

Line and grade will be established by, and as-constructed surveying done by the Department at applicant's expense, or when specifically approved by the Department, by a Professional Engineer or by a Land Surveyor licensed to practice in the State of California or by its authorized representative in accordance with Sections 2.09 and 2.10.

TWENTY-FOUR-INCH (24") AND LARGER TRUNK LINES

10.06 INSTALLATION

The Department may permit the Applicant to have its own contractor install a Trunk Line. The Department reserves the right to install or have its contractor install Trunk Lines when it is in the best interest of the Department. This determination is solely at the discretion of the Department and the Applicant shall pay all installation costs, whether installed by its contractor or by the Department or its contractor.

The Trunk Line installation shall be inspected by the Department at the expense of the Applicant. The Department will also provide plant inspection during pipe fabrication at applicant's expense. The Applicant shall also furnish, at applicant's expense, such labor as will be required by the Department to enable thorough inspection and culling of all the materials by the Applicant and shall furnish reasonable samples of materials at the job to afford adequate testing.

Line and grade will be established by, and as-constructed surveying done by the Department at applicant's expense, or when specifically approved by the Department, by a Professional Engineer or by a Land Surveyor licensed to practice in the State of California or by its authorized representative in accordance with Sections 2.09 and 2.10.

A1-1

DUCTILE IRON PIPE
MATERIAL SPECIFICATION LIST

	Material Description	Size (In.)	Specification/ Drawing Reference	Drawings Included in Part B	*Available from Water System Stores
1.	Ductile iron pipe, Tyton joint, double cement lined	4-12	AWWA C150, Class 52, C111, C104	-	No
2.	Ductile iron pipe, Tyton joint, double cement lined	16,20	AWWA C150, Class 51, C111, C104	-	No
3.	Gray or ductile iron fittings, Tyton joint, cement lined	4-20	AWWA Class 250 C110, C111, C104 DWP Spec. No. W206	-	No
4.	C.I. spools, cement lined	4-8	DWP Spec. No. W 138 (DWP Drawing No. A9093)	Yes	No
5.	C.I. single-back flanged clamps	6-12	DWP Specification No. W 138 (DWP Drawing Nos. A9061-1 and -2)	Yes	No
6.	C.I. double-back flanged clamps	4-12	DWP Specification No. W 138 (DWP Drawing Nos. A9061-1, -2, and -3)	Yes	No
7.	C.I. flanged tapping sleeves	4-8	DWP Specification No. W 220	Yes	No
8.	Machine bolts for 2"-12" and 18" flanges	-	ASTM A307, Grade B, ANSI B18.2	-	No
9.	Hex nuts for 2"-12" and 18" flanges	-	ASTM A563, Grade B, ANSI B18.2	-	No
10.	Stud bolts for 16", 20", and larger flanges	-	ASTM A193, Grade B, ANSI B18.2 (DWP Drawing Nos. A9007-1 and -2)	No	No
11.	Hex nuts for 16", 20", and larger flanges	-	ASTM A194, Grade 2H, oil quenched, ANSI B18.2	-	No
12.	C.I. solid wedge, resil. seat, gate valves	4-12	DWP Specification No. W 244 (low press., r.g. and flg.)	-	Yes
13.	C.I. double disc, square disc, gate valves	16,20	DWP Specification No. W 265, (low press., and high press. flg., and caulked bell)	-	Yes
14.	C.I. swing check valves	4-16	DWP Specification No. W 1086	-	No

	Material Specification	Size (In.)	Specification Drawing Reference	Drawings Included in Part B	*Avaiable from Water System Stores
15.	C.I. air and vacuum valves	2-6	APCO 144, 152, and 153, or equal	-	No
16.	Joint-lock gaskets	4-12	U.S. Pipe "Field Lok", or equal	-	No
17.	Yokes	4-20	DWP Drawing Nos. A9073-1, -2A, -3, -4, -5, and -6; A9081-1, -2, -3, -4, -5, -6, and -7; A9396, B5040-1, -2, and -3	No	Yes
18.	Mechanical couplings	4-20	Rockwell No. 441 and 433 cast ductile iron, stainless steel bolts and nuts, or equal	-	No
19.	Lead	-	DWP Specification No. W 245	-	No
20.	Polyethylene encasement	4-20	ANSI/AWWA C105, A21.5, Class A, Tube form	-	No
21.	Standpipes for 4"-12" gate valves	-	DWP Drawing Nos. A2021, A9201	No	Yes
22.	C.I. vertical gate caps	-	DWP Specification No. W138 (DWP Drawing No. A9034-1)	No	Yes
23.	24-inch manhole ring, frame, and cover	-	DWP Spec. No. W 159 (DWP Drawing No. C626)	No	Yes
24.	Double-outlet fire hydrants (including bury ell)	2-1/2x4 4x4	Latest DWP spec. (DWP Drawing No. D2870)	No	Yes
25.	Copper service pipe	1-2	DWP Specification No. W 1021	-	No
26.	Curb and corporation valves and bronze fittings	1-2	DWP Specification No. W 1022. Curb valve: teflon coated ball valve, iron pipe female with lockwing and lever handle. Corporation valve: teflon coated ball valve, AWWA taper threaded inlet, flared copper connection outlet. James Jones Co., Ford Meter Box Co., or equal.	Yes	Corp. valve & fittings: Corp. valve Yes Curb valve: No

	Material Specification	Size (In.)	Specification/ Drawing Reference	Drawings Included in Part B	*Available from Water System Stores
27.	C.I. companion threaded flange	2	Latest DWP spec. (DWP Drawing No. A9005)	Yes	No
28.	Bronze service clamps	1-2	Latest DWP spec.	Yes	No
29.	No. 2 plastic meter boxes	-	Latest DWP spec. (DWP Drawing No. A9420)	No	Yes
30.	No. 3 plastic meter boxes	-	Latest DWP spec. (DWP Drawing No. A9422)	No	Yes
31.	48-inch by 48-inch plastic vaults and covers	-	Latest DWP spec. (CDR Systems Corp. Drawing No. 102B00)	No	Yes
32.	48-inch by 72-inch plastic vaults and covers	-	Latest DWP spec. (CDR Systems Corp. Drawing No. 102B00-1)	No	Yes
33.	No. 2 concrete meter covers	-	DWP Drawing No. B5050-4	No	Yes
34.	No. 2 plastic meter covers	-	Latest DWP spec. (DWP Drawing No. B5096 and A9204-3)	No	Yes
35.	No. 2 steel meter covers	-	DWP Drawing No. A9259-1	No	Yes
36.	No. 3 concrete meter covers	-	DWP Spec. No.W 153 (DWP Drawing Nos. A9204-2 and A9204-3)	No	Yes
37.	No. 3 plastic meter covers	-	Latest DWP spec. (DWP Drawing No. B5096 and A9204-3)	No	Yes
38.	No. 3 steel meter covers	-	DWP Drawing No. A9260-1	No	Yes
39.	C.I. frames, center-pieces, and rings for concrete meter boxes	-	DWP Spec. No. W 153 (DWP Drawing Nos. A9289 and A9290)	No	Yes
40.	Meters	5/8-10	DWP Spec. Nos. W 128, W 135, W 378, and W 1086	-	Yes
41.	Type II Portland cement	-	DWP Specification No. G 331	-	No

	Material Description	Size (In.)	Specification/ Drawing Reference	Drawings Included in Part B	*Available from Water System Stores
42.	Aggregate for concrete and other uses	_	DWP Specification No. G 391	-	No

*Some materials may not be available from DWP Stores at all times. Materials noted "No" may be procured from DWP Stores under unusual circumstances which are identified and agreed to when financial arrangements are made.

A2-1

STEEL PIPE
MATERIAL SPECIFICATION LIST

	Material Description	Size (In.)	Specification/ Drawing Reference	Drawings Included in Part B	*Available from Water System Stores
1.	Steel pipe, with slip joint for field welding, cement lined and coated	4-20	DWP Spec. No. W 302 (DWP Drawing Nos. A1867 and A3821)	Yes	No
2.	Steel fittings, cement lined and coated	4-20	ANSI B16.9	-	No
3.	Flanges	4-20	ANSI B16.5	-	No
4.	Machine bolts for 2"-12" and 18" flanges	-	ASTM A307, Grade B, ANSI B18.2	-	No
5.	Hex nuts for 2"-12" and 18" flanges	-	ASTM A563, Grade B, ANSI B18.2	-	No
6.	Stud bolts for 16", 20", and larger flanges	-	ASTM A193, Grade B, ANSI B18.2 (DWP Drawing Nos. A9007-1 and -2)	No	No
7.	Hex nuts for 16", 20", and larger flanges	-	ASTM A194, Grade 2H, oil quenched, ANSI B18.2	-	No
8.	Gaskets	4-20	Garlock No. 8798, or equal	-	No
9a.	Mechanical couplings non-insulating	4-20	Smith-Blair No. 411 or equal	-	No
9b.	Mechanical couplings Insulating	4-20	Smith-Blair No. 416 or equal	-	No
10a.	Tie-rods and anchor boxes	4-12	Sheet 14 of the Standard Drawings	-	No
10b.	Insulating sleeve and washer, one piece acetal	4-20	Pacific Seal, Inc. or equal	-	No
11.	Insulating flange assemblies	4-20	DWP Drawing Nos. A9367 and A9417	No	Yes
12.	Anodes	-	Latest DWP spec., 32-lb. Dow "Galvo Pack", or equal	-	No
13.	Heat shrink sleeves for corrosion protection	4-20	"Raychem Heat Shrink Joint Protection Sleeve GAP7" and Raychem "Thermofit Dresser Sleeve", or equal	-	No

	Material Specification	Size (In.)	Specification/ Drawing Reference	Drawings Included in Part B	*Available from Water System Stores
14.	Lead	-	DWP Specification No. W 245	-	No
15.	Cold-applied tape wrap	-	Polyken "#930 Joint-Wrap Tape", 50-mil thick, over Polyken "#927 Pipeline Primer" or "Polyken #929 Pipeline Primer" and Polyken "#931 Filler Tape", if necessary; Tapecoat "CT 10/40W", spiral wrap, over Tapecoat "TC Cold Prime" primer; or equal	-	No
16.	C.I. double disc, square disc gate valves	16,20	DWP Specification No. W 265 (low press. and high press. flg., and caulked bell)	-	Yes
17.	C.I. solid wedge, resil. seat, gate valves	4-12	DWP Specification No. W 244 (low press. flg.)	-	Yes
18.	C.I. solid wedge gate valves	4-8	DWP Specification No. W 117 (high press. flg.)	-	Yes
19.	C.I. double disc gate valves	12	DWP Specification No. W 171 (high press. flg.)	-	Yes
20.	C.I. swing check valves	4-16	DWP Specification No. W1086	-	Yes
21.	C.I. air and vacuum valves	2-6	APCO 144, 152, and 153, or equal	-	No
22.	Standpipes for 4"-12" gate valves	4-12	DWP Drawing Nos. A2021 and A9201	No	Yes
23.	C.I. vertical gate caps	6	DWP Specification No. W 138 (DWP Drawing No. A9034-1)	No	Yes
24.	24-inch manhole ring, frame and cover	-	DWP Specification No. W 159 (DWP Drawing No. C626)	No	Yes
25.	Double-outlet fire hydrants (including bury ell)	2½x4 and 4x4	Latest DWP spec. (DWP Drawing No. D2870)	No	Yes
26.	Built-up fire hydrants	2½	DWP Drawing No. A9143-2	No	Yes

	Material Specification	Size (In.)	Specification/ Drawing Reference	Drawings Included in Part B	*Available from Water System Stores
27.	Copper service pipe	1-2	DWP Specification No. W 1021	-	No
28.	Curb and corporation valves and bronze fittings	1-2	DWP Specification No. W 1022. Curb valve: teflon coated ball valve, iron pipe female with lockwing and lever handle. Corporation valve: teflon coated ball valve, AWWA taper threaded inlet, flared copper connection outlet. James Jones Co., Ford Meter Box Co., or equal	Yes	Corp. valve & fittings: Yes Curb valve: No
29.	C.I. companion threaded flange	2	Latest DWP spec. (DWP Drawing No. A9005)	Yes	No
30.	Service welding couplings	1-1½	Latest DWP spec. (DWP Drawing Nos. A9364 and A9365)	Yes	No
31.	Service insulating couplings	1-1½	Ford Meter Box Co., or equal	-	No
32.	No. 2 plastic meter boxes	-	Latest DWP spec. (DWP Drawing No. A942D)	No	Yes
33.	No. 3 plastic meter boxes	-	Latest DWP spec. (DWP Drawing No. A9422)	No	Yes
34.	48-inch by 48-inch plastic vaults and covers	-	Latest DWP spec. (CDR Systems Corp. Drawing No. 102B00)	No	Yes
35.	48-inch by 72-inch plastic vaults and covers	-	Latest DWP spec. (CDR Systems Corp. Drawing No. 102B00-1)	No	Yes
36.	No. 2 concrete meter covers	-	Latest DWP spec. (DWP Drawing Nos. A9204-1 and A9204-3)	No	Yes
37.	No. 2 plastic meter covers	-	Latest DWP spec. (DWP Drawing Nos. B5096 and A9204-3)	No	Yes
38.	No. 2 steel meter covers	-	DWP Drawing No. A9259-1	No	Yes

	Material Specification	Size (In.)	Specification/ Drawing Reference	Drawings Included in Part B	*Available from Water System Stores
39.	No. 3 concrete meter covers	-	DWP Spec. No. W 153 (DWP Drawing Nos. A9204-2 and A9204-3)	No	Yes
40.	No. 3 plastic meter covers	-	Latest DWP spec. (DWP Drawing Nos. B5096 and 9204-3)	No	Yes
41.	No. 3 steel meter covers	-	DWP Drawing No. A9260-1	No	Yes
42.	C.I. frames, center pieces, and rings for concrete meter boxes	-	DWP Specification No. W 153 (DWP Drawing Nos. A9289 and A9290)	No	Yes
43.	Meters	5/8-10	DWP Spec. Nos. W 128, W 135, W 378, and W 1086	-	Yes
44.	Type II Portland cement	-	DWP Specification No. G 331	-	No
45.	Aggregate for concrete and other uses	-	DWP Specification No. G 391	-	No

*Some materials may not be available from DWP Stores at all times. Materials noted "No" may be procured from DWP Stores under unusual circumstances which are identified and agreed to when financial arrangements are made.

Department of Water & Power
of The City of Los Angeles

STANDARD SPECIFICATIONS
For

FITTINGS: CAST-IRON WATER WORKS

Spec. W 138-R4
(Revised 11- 14-75)

Supersedes
Spec. W 138-R3

---

1. Scope: These specifications set forth the requirements for cast-iron water works fittings for working water pressures of 250 and 400 pounds per square inch.

* 2. Classification of Fittings: All fittings shall comply with drawings classified in the following groups and shall be cement lined as specified:

* a. Group B Fittings: Group B fittings shall be cored pressure fittings in sizes from 4 inches through 12 inches in accordance with the following drawings:

Drawing No.	Title	Cement Lining Required
A9324	C.I. Fire Hydrant Middle Section 12" Offset	No
A9010	15 Degree Bends	Yes
A9011	C.I. Adapter With Bell to Fit Transite Pipe	Yes
A9018	30 Degree Bends	Yes
A9022-2	Long Sweep Offsets	Yes
A9022-3	Standard C.I. Bell & Bell Offsets	Yes
A9022-4	Standard C.I. Bell & Spigot Offsets	Yes
A9030-1, -2	Crosses	Yes
A9031-1, -2	Tees	Yes
A9032	45 Degree Bends	Yes
A9033	90 Degree Double Bell Ells	Yes
A9036-1, -2	Plug Reducers	No
A9037-1	Plugs	No
A9037-2	Plug - C.I. for C.I. Pipe With Rubber Gasket Joint	No
A9045	Beaded Nipples	Yes
A9047	Double Bell Solid Sleeves	No
A9049-1, -2	Taper Reducers	Yes
A9051	Long Slip Sleeves	No
A9056	175 lb C.I. Bell Cap Fitting	No
A9066	Flanges for C.I. Fittings	No
A9067	C.I. Connection - Flange to Bell or Spigot	Yes
A9069	C.I. Connection Flange to Mechanical Joint	Yes
A9093	C.I. Spools	Yes

Std. Spec. W 138-R4

* b. Group C Fittings: Group C fittings shall be cored pressure fittings in sizes 14 inches and larger in accordance with the following drawings:

Drawing No.	Title	Cement Lining Required
A9010	15 Degree Bends	Yes
A9011	C.I. Adapter With Bell to Fit Transite Pipe	Yes
A9018	30 Degree Bends	Yes
A9022-2	Long Sweep Offsets	Yes
A9030-1, -2, -3	Crosses	Yes
A9031-1, -2, -3	Tees	Yes
A9032	45 Degree Bends	Yes
A9033	90 Degree Double Bell Ells	Yes
A9036-1, -2, -3	Plug Reducers	No
A9037-1	Plugs	No
A9037-2	Plug - C.I. for C.I. Pipe With Rubber Gasket Joint	No
A9045	Beaded Nipples	Yes
A9047	Double Bell Solid Sleeves	No
A9049-1, -2, -3, -4	Taper Reducers	Yes
A9051	Long Slip Sleeves	No
A9056	175 lb C.I. Bell Cap Fitting	No
A9066	Flanges for C.I. Fittings	No
A9067	C.I. Connection - Flange to Bell or Spigot	Yes

* c. Group D Fittings: Group D fittings shall be noncored pressure fittings, all sizes, in accordance with the following drawings:

Drawing No.	Title	Cement Lining Required
A9060-1	Single C.I. Flanged Clamps	No
A9061-1, -2, -3	Double Clamps, Flanged Outlet	No

* d. Group E Fittings: Group E fittings shall be gate caps in accordance with the following drawings:

Drawing No.	Title	Cement Lining Required
A9034-1	6" Vertical Gate Cap	No
A9034-2	8" Vertical Gate Cap	No
A9035-1	6" 30 Degree Gate Cap	No
A9035-2	8" 30 Degree Gate Cap	No

* Bell and spigot details on fittings in Groups B, C, and D shall also comply with Drawing A9043-1.

3. Patterns: The Contractor shall furnish all patterns required for fabricating fittings. The patterns shall remain the property of the Contractor.

* 4. Markings: Each fitting shall have 1-inch letters raised 1/8-inch cast on the outside indicating the manufacturer's name, month, year of casting, and showing the size and type of fitting. No markings shall be cast within 8 inches of the spigot end. Castings shorter than 8 inches shall be marked in a practical position. After the coating has been applied, the weight shall be conspicuously painted in white on each fitting 14 inches and larger to be furnished under Groups C and D.

* 5. Weights: If the weights listed in the Proposal Schedule are different from the weights listed on the drawings, the weights listed in the Proposal Schedule shall control. The actual weights of fittings shall not vary more than 10 percent from the listed nominal weights.

6. Tolerances: All hub and spigot ends under Groups B and C shall meet the requirements of the Department's gauging rings as shown on Drawing A9048. Other tolerances shall not exceed those specified in AWWA C110, as last revised.

7. Flanges:

a. Blank Flanges: The thickness of blank, flat-faced flanges shall be 1/8 inch to 1/4 inch greater than the required finished flange thickness.

b. Machined Flanges: When specified in the order, all flanges shall be flat faced and serrated. Serrations shall be made in accordance with Manufacturer's Standardization Society (MSS), Standard Finishes for Contact Faces of Pipe Flanges and Connecting-End Flanges of Valve and Fittings SP-6, as last revised, and shall have a minimum depth of 0.005 inch.

8. Grade and Quality of Castings:

* a. Fittings shall be made of gray iron meeting the requirements of ASTM A 48, Class 30 or Class 40, as last revised. In addition the gray iron shall be of a quality and character to make the fittings strong, tough, and of even grain without undue brittleness and soft enough to permit machining, drilling, cutting, and chipping with reasonable ease. Fittings shall be sound and smooth, free from swells, cold shuts, scale, lumps, blisters, sand holes, scabs, and defects. The fittings shall be free from admixture of cinders, slag, or sand. Bells and spigots shall be circular in cross section with concentric inner and outer surfaces. Plugging, filling, burning-in, or other methods to repair defects shall not be done, except that welding to eliminate defects may be done if, in the opinion of the Engineer, the fittings can be satisfactorily repaired. Before welding, defects shall be chipped out exposing clean metal.

* b. Fittings that are not machineable and fittings which, upon machining or chipping, are found to contain defects which cannot be satisfactorily repaired will be rejected.

* c. The metal of the fittings shall comply with the following:

Sulphur.....not more than 0.15%
Manganese.....0.20% to 0.85%
Phosphorus.....not more than 0.75%

9. Pressure Requirement: Fittings made from Class 30 Iron shall withstand a working water pressure of 250 pounds per square inch. Fittings made from Class 40 Iron shall withstand a working water pressure of 400 pounds per square inch.

10. Bar Testing:

* a. The Contractor shall cast 2 transverse test bars from each heat or run of metal for the castings to be furnished. Testing shall be performed in accordance with ASTM A 438, as last revised.

* b. The Contractor shall have a loading and deflection test made on one test bar from each heat or run of metal. The Department will have the option of conducting bar tests. No test bars shall be broken until the Contractor has notified the Department.

* c. The minimum breaking load and the minimum deflection at the breaking load of the test bars shall be as follows:

Property	ASTM Test Bar Size A	B	C
Controlling Section of Fitting in Inches	0.25 to 0.50	0.51 to 1.00	1.01 to 2.00
Nominal Diameter of Test Bar in Inches	0.88	1.20	2.00
Class 30 Cast Iron			
Breaking Load at Center - Minimum, lb	1150	2200	7600
Deflection of Breaking Load - Minimum, in	0.12	0.24	0.25
Class 40 Cast Iron			
Breaking Load at Center - Minimum, lb	1400	2600	9100
Deflection at Breaking Load - Minimum, in	0.14	0.28	0.30

d. The numerical value of the deflection in inches at the breaking load of the "A" and "B" bars shall be not less than 0.0001 of the breaking load of the bar.

* e. If the first transverse test bar fails to meet the requirements of these specifications and the second transverse test bar does meet the requirements of these specifications, the fitting will be accepted. If both transverse test bars fail to meet the requirements of these specifications, the Contractor may test a tension specimen machined from the broken end of either transverse test bar. If this tension test specimen meets the requirements for the class of cast iron specified, the fitting will be accepted.

f. In addition to the above transverse test bars, the Department may require that the Contractor furnish the AWWA standard test bar.

* g. Test bars shall either be tested in the presence of the Department Engineer or tested by a recognized testing laboratory. The Contractor shall notify the Department's Materials Testing Laboratory of the Water Engineering Design Division, 510 East 2nd Street, Telephone Number (213) 481-5704, not less than 24 hours before the test. After the test the Contractor shall send 3 copies of certified

test reports covering the results of all bar testing to the same address.

* 11. Cleaning: Prior to hydrostatic testing, lining, and coating, all fittings shall be thoroughly cleaned of all sand, scale, dirt, grease, other foreign matter, surface impurities, irregularities, rust, and protruding chaplets.

12. Hammer Testing: Before lining and coating, all fittings shall be thoroughly inspected and hammer tested by the Contractor to determine any flaws or defects. Cored pressure fittings to be hydrostatically tested shall be hammer tested while under pressure.

* 13. Hydrostatic Testing:

a. All Group B fittings shall be tested hydrostatically prior to lining and coating. The Department reserves the right to require hydrostatic testing of Group C fittings. Fittings of Class 30 Iron shall be subjected to a test pressure of 350 pounds per square inch. Fittings of Class 40 Iron shall be subjected to a test pressure of 700 pounds per square inch. The required hydrostatic test pressure shall be maintained for a minimum period of one-half minute. Fittings shall be subjected to a hammer test while under the required pressure. Fittings that leak or sweat will be subject to rejection.

* b. Where slight sweating occurs during the hydrostatic test the Engineer may approve peening to stop sweating.

c. If the fittings are to be transshipped, they shall be hydrostatically tested at the location of the last point of loading.

14. Lining and Coating:

* a. All fittings designated in Article 2 as cement lined, shall be cement-mortar lined in accordance with AWWA C104, as last revised.

* b. Cold-applied T&O Tar-Base Paint (commonly called T&O Tank Solution) shall be used as a protective coating. The coating shall be applied after the cement lining has set firmly and before any drying cracks have appeared, but in every case the coating shall be applied within 24 hours after lining. The tar-base paint shall be tasteless, odorless, and nontoxic. The paint shall be self-priming, fast drying, and formulated to minimize taste and odor contamination of water. The paint shall contain no added filler, pigments, or fibrous materials.

Asphalt of either petroleum or natural base shall not be used as a part of the ingredients. The paint shall comply with the requirements of the following table:

Property	Results	ASTM Test Method as Last Revised
Viscosity, 25C	100 g at 60-75 sec	D 562
Weight per gal	88.7-9.7 lb	
Ash, maximum	0.5%	Ignition
Distillation at 200C, maximum	Residue 45% by weight	D 20
Flash point, minimum	70F (21C)	D 56

* c. The thinner shall be compatible with the T&O Tar-Base Paint and shall be fast drying and shall not curdle or congeal the paint. The thinner shall not impart taste or odor to water after coating has dried for 48 hours.

* 15. Coating Procedure: The paint shall be applied by immersing the fitting in T&O Tar-Base Paint. The fitting shall then be removed and allowed to drain. Each fitting shall be inspected; if holidays or other imperfections are found in the coating, the fitting shall be immersed until there are no imperfections. The fitting shall then be set aside to dry. Accumulation of surplus material in the bells and other places shall be removed by brushing or scraping.

16. Inspection: The Department's representative shall at all times have the right to inspect the work in the course of manufacture and make such tests from time to time as he may deem advisable, providing no delay in production of acceptable materials or equipment is caused thereby. The Contractor shall furnish, at his own expense, reasonable facilities including tools and instruments for so doing and for obtaining such information as the representative desires respecting the progress and manner of the work and the character of the materials used. However, final inspection will be made upon receipt at the Department's specified receiving points; and, if any materials or equipment do not meet the requirements of these specifications, the lot or any faulty portion thereof may be rejected.

Before offering a lot for inspection, the manufacturer shall eliminate any portion which in his opinion is defective or does not meet the requirements of the specifications. All expense of the initial acceptance test will be borne by the Department. The expense of subsequent tests due to failure of materials or equipment first offered will be charged against the Contractor. The fact that the materials or equipment have been

successfully inspected, tested, and accepted by the Department's representative, shall not relieve the Contractor of responsibility in the case of later discovery of flaws or defects.

17. Shipping: The material shall be prepared for shipment in such a manner as to ensure acceptance by common carrier for transportation at the lowest rate and to afford protection from the normal hazards of transportation. Each shipment shall be legibly marked with the purchase order number and name of supplier. The specification number shall be shown when specified.

Note: Asterisk (*) indicates changes in a paragraph.

(END OF STANDARD SPECIFICATIONS)

Department of Water & Power
of The City of Los Angeles

STANDARD SPECIFICATIONS
FOR

Spec. W 206-R1
(Revised 8-13-90)

FITTINGS: DUCTILE IRON, WATER WORKS, RUBBER-GASKET JOINT, CEMENT-MORTAR-LINED, 4 INCHES THROUGH 24 INCHES, FOR AWWA DUCTILE IRON PIPE

Supersedes
Spec. W 206

---

* 1. Scope: These specifications cover the requirements for ductile-iron water works fittings, with push-on rubber-gasket joints and cement-mortar lining, rated up to 350 pounds per square inch working water pressure and for use with AWWA ductile-iron pipe with push-on rubber-gasket joints.

* 2. Standards and Specifications: All standards and specifications referred to in these specifications shall be as last revised, unless stated otherwise in these specifications.

3. Material Requirements:

* a. Ductile iron shall meet the applicable requirements of ASTM A 536, Grade 70-50-05 and shall meet the chemical requirements of AWWA C110-87, Section 10-12.2.

* b. Fittings shall meet the requirements of ANSI A21.10 (AWWA C110 or C153) for push-on joints, except as modified herein.

* c. Rubber gaskets, as specified on Drawings A9380, B5089, and B5091 shall meet the requirements of ANSI A21.11 (AWWA C111) for Tyton type push-on joints, except as modified herein. Tyton gaskets shall be included with each fitting only if specified in the order.

d. Cement-mortar lining of the designated fittings shall meet the requirements of ANSI A21.4 (AWWA C104), except as modified herein.

*

Note: The asterisk (*) indicates changes in a paragraph.

4. Dimensions and Weights:

a. Dimensions and weights of all fittings shall be in accordance with the following drawings:

Drawing No.	Title	Cement Lining Required
A9381	11-1/4-Degree Double Bell Bends	Yes
A9382	22-1/2-Degree Double Bell Bends	Yes
A9383	45-Degree Double Bell Bends	Yes
A9384	90-Degree Double Bell Bends	Yes
A9385	Double Bell Sleeve	Yes
A9386	Tees	Yes
A9387	Crosses	
A9388	Taper Reducers, Spigot-by-Bell	Yes
A9389	Taper Reducers, Bell-by-Spigot	Yes
A9390	Fire Hydrant Tees	Yes
A9391	Flange-to-Bell Adapter	Yes
A9392	Blind Plug	No
B5089	Bell Cavity Detail and Spigot Dimensions, 4-Inch - 12-Inch	Yes
B5091	Bell Cavity Detail and Spigot Dimensions, 16-Inch - 24-Inch	Yes

* b. All weights listed in the above drawings are estimated weights. The bidder shall list the actual shipping weight of each size of fitting in the proposal.

* c. Dimensions A in Drawings A9381 through A9384 are minimum dimensions. Dimensions L in Drawings A9385 and A9391 are minimum dimensions. Dimensions H and J in Drawing A9386 are minimum dimensions.

5. Patterns: The Contractor shall furnish all patterns required for fabricating fittings. The patterns shall remain the property of the Contractor.

6. Markings: Each fitting shall be marked in accordance with Subsection 10-9 of ANSI A21.10. No markings shall be cast within 8 inches of the spigot end. Castings shorter than 8 inches shall be marked in a practical position. After the coating has been applied, the weight shall be conspicuously painted in white on each fitting 14 inches and larger.

Note: The asterisk (*) indicates changes in a paragraph.

* 7. Weights: If the weights listed in the Proposal Schedule are different from the weights listed on the drawings, the weights listed in the Proposal Schedule shall govern. The actual weights of fittings shall not vary more than 10 percent from the weights listed by the Contractor in the proposal.

8. Tolerances: All bell-and-spigot ends shall meet the requirements specified in ANSI A21.10.

9. Ends:

a. Blank Flanges: The thickness of blank, flat-faced flanges shall be 1/8 inch to 1/4 inch greater than the required finished flange thickness.

b. Machined Flanges: When specified in the order, all flanges shall be flat faced and serrated. Serrations shall be made in accordance with Manufacturer's Standardization Society (MSS), Standard Finishes for Contact Faces of Pipe Flanges and Connecting-End Flanges of Valves and Fittings, SP-6 and shall have a minimum depth of 0.005 inch.

c. Bells: Internal and external dimensions of bells shall conform to the Tyton type push-on joint as shown on Drawings B5089 and B5091.

d. Spigots: Internal and external dimensions of spigots shall conform to the Tyton type push-on joint as shown on Drawings B5089 and B5091.

10. Grade and Quality of Castings:

a. Fittings shall be a quality and character to make the fittings strong, tough, and of even grain without undue brittleness and soft enough to permit machining, drilling, cutting, and chipping with reasonable ease. Fittings shall be sound and smooth, free from swells, cold shuts, scale, lumps, blisters, sand holes, scabs, and defects. The fittings shall be free from admixture of cinders, slag, or sand. Bells and spigots shall be circular in cross section with concentric inner and outer surfaces. Plugging, filling, burning-in, or other methods to repair defects shall not be done, except that welding to eliminate defects may be done if, in the opinion of the Engineer, the fittings can be satisfactorily repaired. Before welding, defects shall be chipped out exposing clean metal.

b. Fittings that are not machineable and fittings which, upon machining or chipping, are found to contain defects which cannot be satisfactorily repaired will be rejected.

Note: The asterisk (*) indicates changes in a paragraph.

*

* 11. Pressure Requirement: Fittings made from Grade 70-50-05 ductile iron shall withstand a working water pressure of 350 pounds per square inch for Tyton Joint fittings, and 250 pounds per square inch for flanged fittings.

12. Bar Testing:

*

a. Ductile Iron: The Contractor shall cast and prepare 2 test bars from each heat or run of metal for the castings to be furnished. The Contractor shall cast and prepare either the Standard Round Test Specimen or the Y-Block type. Heat treatment of test bars shall be identical to that of the casting to be furnished. Test bars and testing shall be in accordance with ASTM A 536, except that the grade shall be 70-50-05. The acceptance values shall be as follows: minimum tensile strength 70,000 psi, minimum yield strength 50,000 psi, and minimum elongation 5 percent.

* b. Test Bars: Test bars shall either be tested in the presence of the Engineer or tested by a recognized testing laboratory. The Contractor shall notify the Department's Materials Testing Laboratory of the Water Engineering Design Division, 510 East 2nd Street, Telephone Number (213) 481-5704, not less than 24 hours before the test. After the test, the Contractor shall furnish 3 copies of certified test reports of all bar testing.

13. Cleaning: Prior to hydrostatic testing, lining, and coating, all fittings shall be thoroughly cleaned of all sand, scale, dirt, grease, other foreign matter, surface impurities, irregularities, rust, and protruding chaplets.

14. Hammer Testing: Before lining and coating, all fittings shall be thoroughly inspected and hammer tested by the Contractor to determine any flaws or defects. Fittings to be hydrostatically tested shall be hammer tested while under pressure.

15. Hydrostatic Testing:

* a. When specified in the order, fittings shall be tested hydrostatically prior to lining and coating. Tyton joint fittings shall be subjected to a test pressure of 525 pounds per square inch and flanged fittings shall be subjected to a test

Note: The asterisk (*) indicates changes in a paragraph.

pressure of 375 pounds per square inch. The required hydrostatic test pressure shall be maintained for a minimum period of one-half minute. Fittings shall be subjected to a hammer test while under the required pressure. Fittings that leak or sweat will be subject to rejection.

b. Where slight sweating occurs during the hydrostatic test, the Engineer may approve peening to stop sweating.

c. If the fittings are to be transshipped, they shall be hydrostatically tested at the location of the last point of loading.

16. Lining and Coating:

* a. All fittings designated in Article 4 as cement lined shall be cement-mortar lined in accordance with AWWA C104 with double thickness lining.

* b. The exterior ferrous surfaces of each fittings shall be thoroughly cleaned of rust, dirt, grease, and all other foreign matter before the application of a protective coating. The protective coating shall be applied after the cement lining has set firmly and before any drying cracks have appeared, but in every case the protective coating shall be applied within 24 hours after lining. The protective coating shall be tasteless, odorless, and nontoxic. Coating shall be black, self-priming, fast drying, formulated to minimize taste and odor contamination of water, and shall be composed of pitch derived from selected tars suitably blended with coal-tar solvent, Koppers Company T & O Tank Solution or Bituplastic No. 28, or an alternate coating meeting the requirements of Section 53-10.1 of AWWA C153.

c. The thinner used shall be compatible with the above protective coating, shall be fast drying, and shall not curdle or congeal the paint. The thinner shall not impart taste or odor to water after coating has dried for 48 hours.

* 17. Protective Coating Procedure: The protective coating shall be applied by spraying or by immersing the fitting in protective coating. When applied by immersion, the fitting shall then be removed and allowed to drain. Each fitting shall be inspected. If holidays or other imperfections are found in the protective coating, the fitting shall be resprayed or immersed until there are no imperfections. The fitting shall then be dried. Accumulation of surplus coating material shall be removed.

Note: The asterisk (*) indicates changes in a paragraph.

18. Inspection: The Engineer shall at all times have the right to inspect the work in the course of manufacture and make such tests from time to time as the Engineer may deem advisable, providing no delay in production of acceptable materials or equipment is caused thereby. The Contractor shall furnish, at the Contractor's own expense, reasonable facilities including tools and instruments for so doing and for obtaining such information as the representative desires respecting the progress and manner of the work and the character of the materials used. However, final inspection will be made upon receipt at the Department's specified receiving points; and, if any materials or equipment do not meet the requirements of these specifications, the lot or any faulty portion thereof may be rejected.

Before offering a lot for inspection, the Contractor shall eliminate any portion which are defective or does not meet the requirements of the specifications. All expense of the initial acceptance test will be borne by the Department. The expense of subsequent tests due to failure of materials or equipment first offered will be charged against the Contractor. The fact that the materials or equipment have been successfully inspected, tested, and accepted by the Engineer shall not relieve the Contractor of responsibility in the case of later discovery of flaws or defects.

19. Shipping: The fittings shall be prepared for shipment in such a manner as to ensure acceptance by common carrier for transportation at the lowest rate and to afford protection from the normal hazards of transportation. Each shipment shall be legibly marked with the purchase order number and name of supplier. The specifications number shall be shown when specified. The fittings shall be securely banded to wooden, non-returnable, 4-way forklift entry pallets, and shall be delivered by trucks. The truckbed shall be open and accessible on 3 sides for access by a conventional forklift.

Note: The asterisk (*) indicates changes in a paragraph.

(END OF STANDARD SPECIFICATIONS)

FOR FLANGE DETAILS SEE A9066

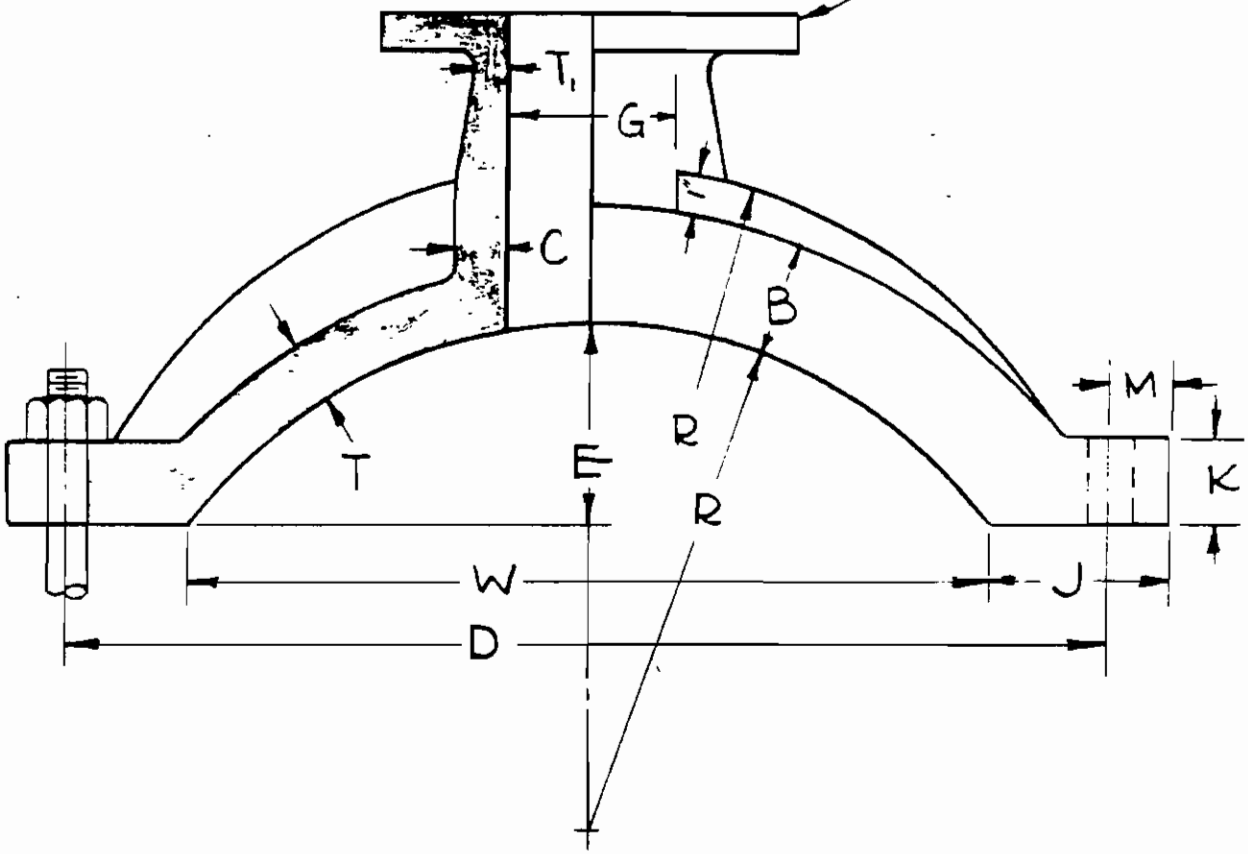

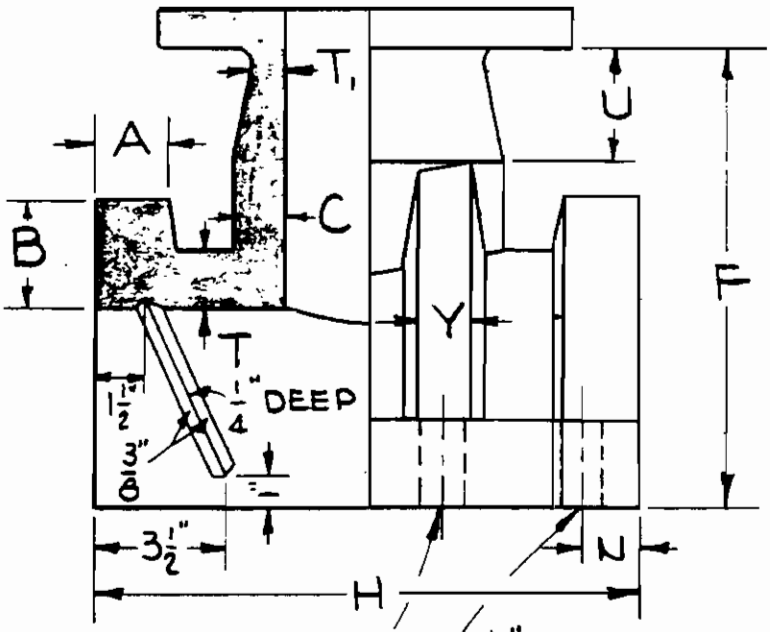

BOLT HOLES EQUALLY SPACED & 1/8" LARGER THAN BALES

W.D.S. 515A

SINGLE CAST IRON FLANGED CLAMPS

0

A9060-1

NO.	DATE	INT'L'S.	REVISIONS DESCRIPTION	APP'V'D
1	5-56	F.M.	REVISED & REDRAWN	AW

DEPARTMENT OF WATER AND POWER
WATER SYSTEM — CITY OF LOS ANGELES

	NAME	DATE	APPROVED
DESIGNED			R. E. Hanson
DRAWN	F. S. M.	8-56	
CHECKED	A. K. W.	5-56	CHF ENGR OF WTR WKS & ASSY ENGR

MAY 29 '84 H.E.H.

SINGLE CAST IRON FLANGED CLAMPS

SIZE MAIN	SIZE BRANCH	A	B	C	D	E	F	G	H	J	K	M	N	R	T	T1	U	W	Y	W LBS
12"	4"	1.75	2.0	1.4	14.4	2.5	8.5	4	14.3	3.4	2.0	1.45	1.45	6.15	1.4	.75	4	10.5	1.25	125
12"	6"	"	"	1.5	"	"	"	6	16.3	"	"	"	"	"	"	.80	"	"	"	140
16"	4"	"	2.5	1.4	18.65	3.05	10.55	4	14.3	4.05	"	"	"	8.9	1.5	.75	"	13.45	"	200
16"	6"	"	"	1.5	"	"	"	6	16.3	"	"	"	"	"	"	.80	"	"	"	225
16"	8"	"	"	1.65	"	"	11.05	8	18.3	"	"	"	"	"	"	.85	4.5	"	"	245
20"	4"	"	3.0	1.4	22.9	3.75	11.76	4	14.3	4.6	2.15	"	"	11.03	"	.75	4	16.6	"	310
20"	6"	"	"	1.5	"	"	"	6	16.3	"	"	"	"	"	"	.80	"	"	"	325
20"	8"	"	"	1.65	"	"	12.25	8	18.3	"	"	"	"	"	"	.85	4.5	"	"	370
20"	10"	"	"	1.75	"	"	13.25	10	20.3	"	"	"	"	"	"	1.0	5.5	"	"	400
24"	4"	2.0	"	1.4	27.25	5.25	13.25	4	14.3	"	2.3	1.5	1.5	13.16	"	.75	4	21.05	1.5	375
24"	6"	"	"	1.5	"	"	"	6	16.3	"	"	"	"	"	"	.80	"	"	"	400
24"	8"	"	"	1.65	"	"	13.75	8	18.3	"	"	"	"	"	"	.85	4.5	"	"	465
24"	10"	"	"	1.75	"	"	14.75	10	20.3	"	"	"	"	"	"	1.0	5.5	"	"	510
24"	12"	"	"	1.85	"	"	"	12	22.3	"	"	"	"	"	"	1.4	"	"	"	575
30"	4"	"	"	1.4	33.35	7.5	15.5	4	14.3	4.5	2.5	"	"	16.2	1.75	.15	4	27.35	"	495
30"	6"	"	"	1.5	"	"	"	6	16.3	"	"	"	"	"	"	.80	"	"	"	520
30"	8"	"	"	1.65	"	"	16.0	8	18.3	"	"	"	"	"	"	.85	4.5	"	"	560
30"	10"	"	"	1.75	"	"	17.0	10	20.3	"	"	"	"	"	"	1.0	5.5	"	"	610
30"	12"	"	"	1.85	"	"	"	12	22.3	"	"	"	"	"	"	1.4	"	"	"	68[illegible]

4 BALES REQ. ON ALL CLAMPS
3/4" " " " 12" TO 20" MAINS
7/8" " " " 24" & 30" "

NO.	DATE	BY	REVISIONS DESCRIPTION	APP'D
1	5-96	F.M.	REVISED & REDRAWN	A.W.

DEPARTMENT OF WATER AND POWER
WATER SYSTEM
CITY OF LOS ANGELES

DESIGNED — NAME —
DRAWN F.S.M. DATE 3-86
CHECKED A.K.W. 3-86

APPROVED
Kenneth R. Hunter
CHIEF ENGINEER OF THE W.S. & ASST. GEN. MGR.

WDS. 515 A

A9060-2

JAN 6 '84

516AR1

DOUBLE CLAMP—FLANGED OUTLET

(CAST IRON)

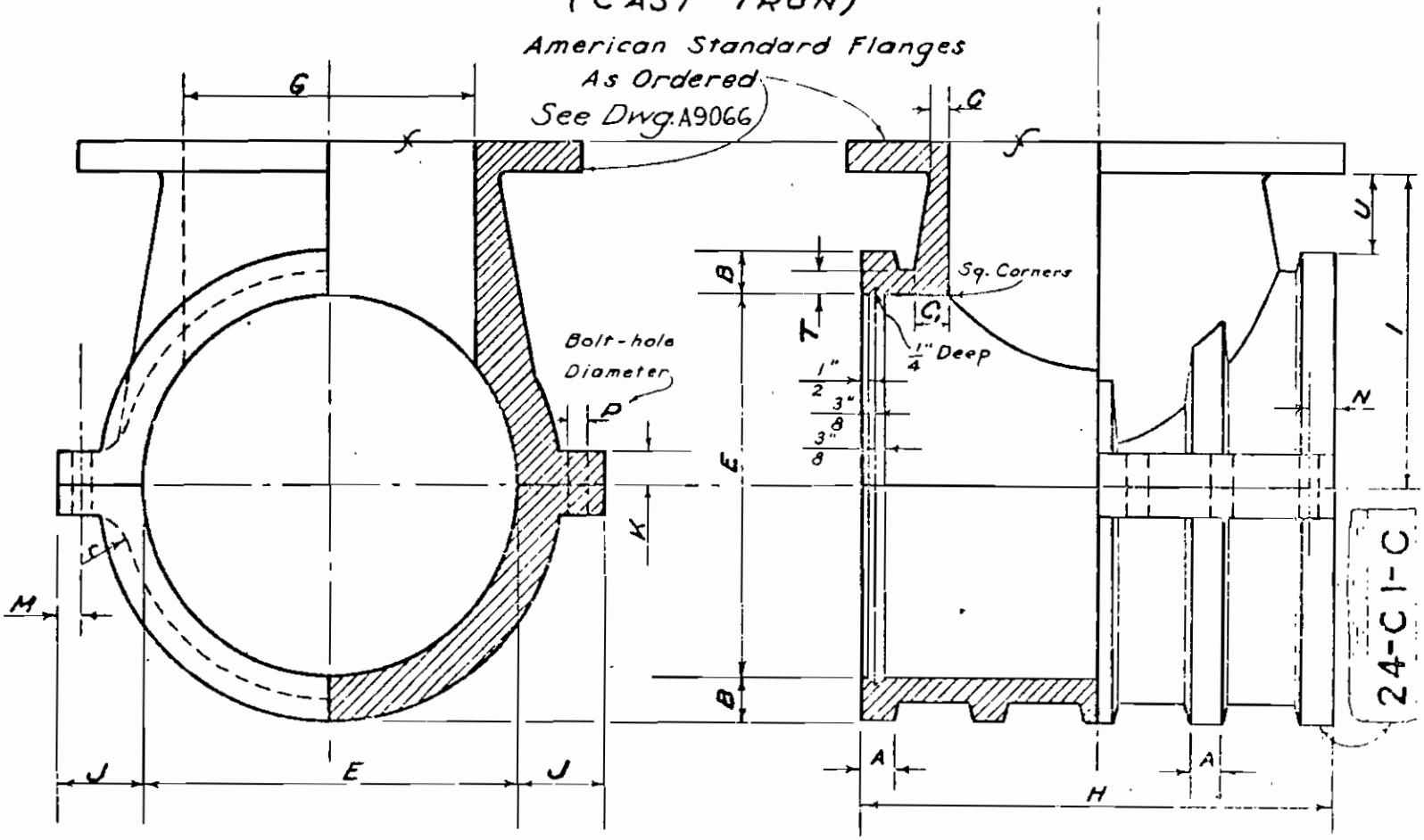

NOTES :- Set to consist of two pieces.
All bolt holes to be equally spaced and cored within ± 1/32" of size shown.
Ribs to be equally spaced.

All corners to be filletted
Fillet and ribs to be recessed for bolt heads and nuts no more than necessary.

24-C1-C

TITLE DOUBLE CLAMP—FLANGED OUTLET
DRAWN
TRACED
CHECKED
DATE 4-1-41
DATE 4-1-41
CITY OF LOS ANGELES
DEPARTMENT OF WATER & POWER
BUREAU OF WATER WORKS & SUPPLY
WATER DISTRIBUTION SYSTEM

A9061-1

516AR1

DOUBLE CLAMP—FLANGED OUTLET

(CAST IRON)

SIZE PIPE Class C			DIMENSIONS IN INCHES																		
ITEM	MAIN	BRANCH	A	B	C	C,	E	G	H	I	J	K	M	N	r	T	U	P	NO. OF HOLES	APPROX. WEIGHT POUNDS	PATTERN MADE
1	4	4	1.50	1.65	.75	1.40	5.80	4.0	14.3	9.15	3.75	1.25	1.30	1.25	5	1.00	3.60	7/8	8	1.10	
2	6	4	1.50	1.75	.75	1.40	7.00	4.0	14.3	9.25	3.85	1.25	1.30	1.25	5	1.05	3.55	7/8	8	1.20	
3	6	6	1.50	1.75	.80	1.50	7.20	6.0	16.3	9.50	3.85	1.25	1.30	1.25	5	1.05	3.80	7/8	8	[illegible]	
4	8	4	1.50	1.85	.75	1.40	8.40	4.0	14.3	10.40	3.95	1.25	1.30	1.25	6	1.10	3.55	7/8	8	2.70	
5	8	6	1.50	1.85	.80	1.50	8.40	6.0	16.3	10.65	3.95	1.25	1.30	1.25	6	1.10	3.75	7/8	8	3.15	
6	8	8	1.50	1.85	.85	1.65	8.40	8.0	18.3	11.64	3.95	1.25	1.30	[illegible]	6	1.10	[illegible]	7/8	8	[illegible]	
7	10	4	1.50	1.95	.75	1.40	12.20	4.0	14.3	11.20	4.05	1.50	1.30	1.25	6	[illegible]	[illegible]	7/8	8	[illegible]	
8	10	6	1.50	1.95	.80	1.50	12.20	6.0	16.3	11.75	4.05	1.50	1.30	1.25	6	[illegible]	3.70	7/8	8	[illegible]	
9	10	8	1.50	1.95	.85	1.65	12.20	8.0	18.3	12.63	4.05	1.50	1.30	1.25	6	1.15	[illegible]	7/8	8	4.30	
10	10	10	1.50	1.95	1.00	1.75	12.20	10.0	20.3	13.99	4.05	1.50	1.30	[illegible]	6	1.15	5.04	7/8	10		
11	12	4	1.50	2.05	.75	1.40	14.30	4.0	14.3	12.60	4.45	1.50	1.45	1.40	7	[illegible]	3.40	1	8	3.90	
12	12	6	1.50	2.05	.80	1.50	14.30	6.0	16.3	12.85	4.45	1.50	1.45	1.40	7	1.20	3.65	1	8	[illegible]	
13	12	8	1.50	2.05	.85	1.65	14.30	8.0	18.3	13.73	4.45	1.50	1.45	1.40	7	1.20	[illegible]	1	8	5.25	
14	12	10	1.50	2.05	1.00	1.75	14.30	10.0	20.3	15.14	4.45	1.50	1.45	1.40	7	1.20	5.94	1	10		
15	12	12	1.50	2.05	1.40	2.00	14.30	12.0	22.3	15.76	4.45	1.50	1.45	[illegible]	7	1.20	6.56	1	10	7.40	
16	14	4	1.50	2.15	.75	1.40	16.45	4.0	14.3	13.73	4.55	1.50	1.45	1.40	7	1.25	3.35	1	8		
17	14	6	1.50	2.15	.80	1.50	16.45	6.0	16.3	13.99	4.55	1.50	1.45	1.40	7	1.25	3.60	1	8		
18	14	8	1.50	2.15	.85	1.65	16.45	8.0	18.3	14.86	4.55	1.50	1.45	1.40	7	1.25	4.48	1	8		
19	14	10	1.50	2.15	1.00	1.75	16.45	10.0	20.3	[illegible]	4.55	1.50	1.45	1.40	7	1.25	5.94	1	10		
20	14	12	1.50	2.15	1.40	2.00	16.45	12.0	22.3	[illegible]	4.55	1.50	1.45	1.40	7	1.25	[illegible]	1	10		
21	16	4	1.75	2.20	.75	1.40	18.80	4.0	14.3	14.95	4.70	1.75	1.50	1.50	7	1.30	3.35	1 1/8	8	[illegible]	
22	16	6	1.75	2.20	.80	1.50	18.80	6.0	16.3	15.20	4.70	1.75	1.50	1.50	7	1.30	3.60	1 1/8	8	5.15	
23	16	8	1.75	2.20	.85	1.65	18.80	8.0	18.3	16.08	4.70	1.75	1.50	1.50	7	1.30	4.48	1 1/8	8	6.55	
24	16	10	1.75	2.20	1.00	1.75	18.80	10.0	20.3	17.54	4.70	1.75	1.50	1.50	7	1.30	5.94	1 1/8	8		
25	16	12	1.75	2.20	1.40	[illegible]	18.80	12.0	22.3	[illegible]	4.70	1.75	1.50	[illegible]	7	1.30	[illegible]	1 1/8	10	9.95	

DOUBLE CLAMP—FLANGED OUTLET

CALCULATED [illegible] 4-22-41
TRACED [illegible] 12-1-41
CHECKED [illegible]
APPD [illegible]

CITY OF LOS ANGELES
DEPARTMENT OF WATER & POWER
BUREAU OF WATER WORKS & SUPPLY
WATER DISTRIBUTION SYSTEM

516-B R2

A9051-2

516-C R2.

DOUBLE CLAMP—FLANGED OUTLET

(CAST IRON)

SIZE PIPE Class C			DIMENSIONS IN INCHES																		
ITEM	MAIN	BRANCH	A	B	C	C,	E	G	H	I	J	K	M	N	r	T	U	P	No. OF HOLES	WEIGHT POUNDS	PATTERN MADE
26	18	4	1.75	2.40	.75	1.40	2092	4.0	14.3	16.06	4.90	1.75	1.50	1.50	8	1.35	3.20	1/8	8		
27	18	6	1.75	2.40	.80	1.50	2092	6.0	16.3	16.31	4.90	1.75	1.50	1.50	8	1.35	3.45	1/8	8		
28	18	8	1.75	2.40	.85	1.65	2092	8.0	18.3	16.24	4.90	1.75	1.50	1.50	8	1.35	5.1[illegible]	1/4	8		
29	18	10	1.75	2.40	1.00	1.75	2092	10.0	20.3	19.80	4.90	1.75	1.50	1.50	8	1.35	5.94	1/8	10		
30	18	12	1.75	2.40	1.40	2.00	2092	12.0	22.3	19.4	4.90	1.75	1.50	1.50	8	1.35	6.56	1/8	10	1025	
31	20	4	1.75	2.55	.75	1.40	2306	4.0	14.3	17.18	5.05	1.75	1.60	1.50	8	1.40	3.70	1/8	8		
32	20	6	1.75	2.55	.80	1.50	2306	6.0	16.3	17.43	5.20	1.75	1.60	1.60	8	1.40	3.35	1/4	8	740	
33	20	8	1.75	2.55	.85	1.65	2306	8.0	18.3	19.46	5.20	1.75	1.60	1.60	8	1.40	5.38	1/4	8	890	
34	20	10	1.75	2.55	1.00	1.75	2306	10.0	20.3	20.02	5.20	1.75	1.60	1.60	8	1.40	5.94	1/4	8		
35	20	12	1.75	2.55	1.40	2.00	2306	12.0	22.3	20.84	5.20	1.75	1.60	1.60	8	1.40	6.56	1/4	8	1170	
36	24	4	2.00	2.75	.75	1.40	2732	4.0	14.3	19.41	5.75	2.00	1.60	1.50	9	1.50	3.60	1/4	8		
37	24	6	2.00	2.75	.80	1.50	2732	6.0	16.3	20.91	5.50	2.00	1.60	1.60	9	1.50	4.50	1/4	8	960	
38	24	8	2.00	2.75	.85	1.65	2732	8.0	18.3	21.79	5.50	2.00	1.60	1.60	9	1.50	5.38	1/4	8	1095	
39	24	10	2.00	2.75	1.00	1.75	2732	10.0	20.3	22.35	5.50	2.00	1.60	1.60	9	1.50	5.94	1/4	10		
40	24	12	2.00	2.75	1.40	2.00	2732	12.0	22.3	22.91	5.50	2.00	1.60	1.50	9	1.50	6.55	1/4	10	1285	
41	30	4	2.00	3.20	.75	1.40	3340	4.0	14.3	24.15	5.95	2.00	1.60	1.60	10	1.70	4.25	1/4	8		
42	30	6	2.00	3.20	.80	1.50	3340	6.0	16.3	24.40	6.20	2.00	1.70	1.70	10	1.70	4.50	1/4	8	1285	
43	30	8	2.00	3.20	.85	1.65	3340	8.0	18.3	25.29	6.20	2.00	1.70	1.70	10	1.70	5.38	1/4	8		
44	30	10	2.00	3.20	1.00	1.75	3340	10.0	20.3	25.84	6.20	2.00	1.70	1.70	10	1.70	5.94	1/4	10		
45	30	12	2.00	3.20	1.40	2.00	3340	12.0	22.3	26.46	6.20	2.00	1.70	1.70	10	1.70	6.56	1/4	10		

DOUBLE CLAMP—FLANGED OUTLET

CALCULATED
CHECKED
TRACED
CHECKED

DATE
REVISIONS

CITY OF LOS ANGELES
DEPARTMENT OF WATER & POWER
BUREAU OF WATER WORKS & SUPPLY
WATER DISTRIBUTION SYSTEM

516-C R2.

A9061-3

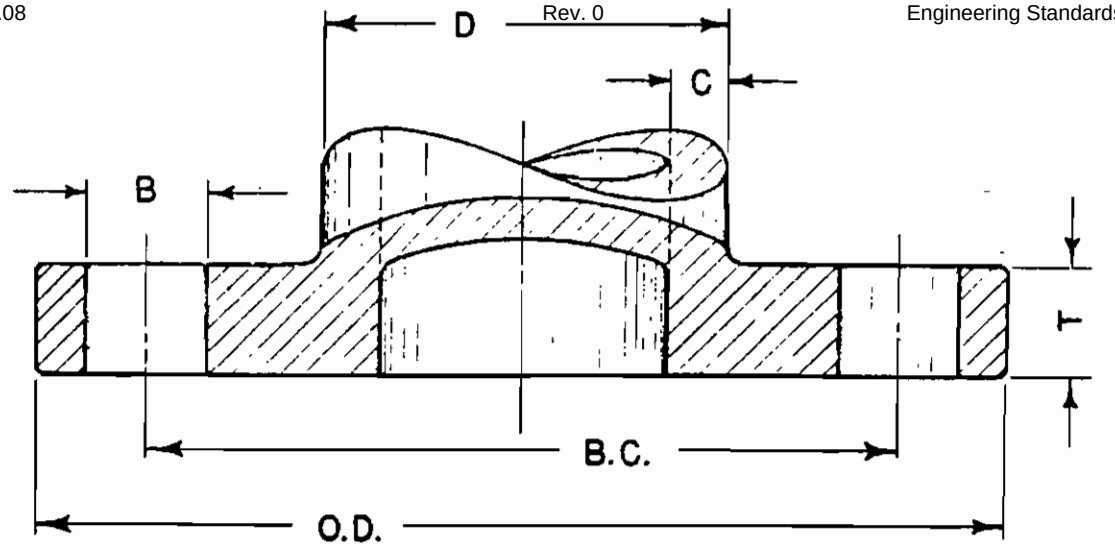

SIZE	AMERICAN STANDARD 125 LB. FLANGES						
	B.	C	D	T	B.C.	O.D.	NO. HOLES
1 1/2	5/8	0.3	2.1	9/16	3 7/8	5	4
2	3/4	0.35	2.7	5/8	4 3/4	6	4
3	3/4	0.4	3.8	3/4	6	7 1/2	4
4	3/4	0.5	5.0	15/16	7 1/2	9	8
6	7/8	0.6	7.2	1	9 1/2	11	8
8	7/8	0.7	9.4	1 1/8	11 3/4	13 1/2	8
10	1	0.8	11.6	1 3/16	14 1/4	16	12
12	1	0.9	13.8	1 1/4	17	19	12
14	1 1/8	1.0	16.0	1 3/8	18 3/4	21	12
16	1 1/8	1.1	18.2	1 7/16	21 1/4	23 1/2	16
20	1 1/4	1.3	22.5	1 11/16	25	27 1/2	20
24	1 3/8	1.5	26.7	1 7/8	29 1/2	32	20
30	1 3/8	1.75	33.3	2 1/8	36	38 3/4	28
36	1 5/8	2.0	39.6	2 3/8	42 3/4	46	32

SIZE	AMERICAN STANDARD 250 LB. FLANGES						
	B	C	D	T	B.C.	O.D.	NO. HOLES
1 1/2	7/8	0.3	2.1	13/16	4 1/2	6 1/8	4
2	3/4	0.35	2.7	7/8	5	6 1/2	8
3	7/8	0.4	3.8	1 1/8	6 5/8	8 1/4	8
4	7/8	0.5	5.0	1 1/4	7 7/8	10	8
6	7/8	0.6	7.2	1 7/16	10 5/8	12 1/2	12
8	1	0.7	9.4	1 5/8	13	15	12
10	1 1/8	0.8	11.6	1 7/8	15 1/4	17 1/2	16
12	1 1/4	0.9	13.8	2	17 3/4	20 1/2	16
14	1 1/4	1.0	16.0	2 1/8	20 1/4	23	20
16	1 3/8	1.1	18.2	2 1/4	22 1/2	25 1/2	20
20	1 3/8	1.3	22.5	2 1/2	27	30 1/2	24
24	1 5/8	1.5	26.7	2 3/4	32	36	24
30	2	1.75	33.3	3	39 1/4	43	28
36	2 1/4	2.0	39.6	3 3/8	46	50	32

DIMENSIONS IN INCHES

FLANGES FOR C.I. FITTINGS

CALCULATED
CHECKED
DRAWN

CITY OF LOS ANGELES
DEPARTMENT OF WATER & POWER
BUREAU OF WATER WORKS & SUPPLY
WATER SYSTEM

546 R1

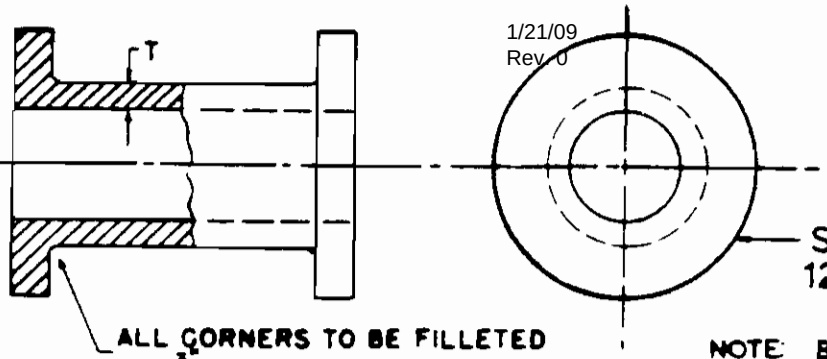

NOTE: BOLT HOLES ON THE OPPOSITE FLANGES SHALL BE ON THE SAME ALIGNMENT.

ITEM	SIZE INCHES	LENGTH UNMACHINED FLANGES INCHES	UNMACHINED FLANGE THICKNESS INCHES	I.D. INCHES	T INCHES	O.D FLANGE INCHES	LENGTH MACHINED FLANGES INCHES	WEIGHT LBS. ROUGH	WEIGHT LBS. FINISHED
1	4	6 3/8	1 1/8	4.24	.52	9	6	36	30
2	4	24 3/8	1 1/8	4.24	.52	9	24	76	70
3	4	9 3/8	1 1/8	4.24	.52	9	9	42	36
4	4	18 3/8	1 1/8	4.24	.52	9	18	60	54
5	4	12 3/8	1 1/8	4.24	.52	9	12	48	42
6	6	2 3/8	1 3/16	6.00	.75	11 1/4	2	41	34
7	6	3 3/8	1 3/16	6.00	.75	11 1/4	3	60	52
8	6	6 3/8	1 3/16	6.00	.75	11 1/4	6	66	59
9	6	12 3/8	1 3/16	6.00	.75	11 1/4	12	91	84
10	6	18 3/8	1 3/16	6.00	75	11 1/4	18	116	109
11	6	24 3/8	1 3/16	6.00	.75	11 1/4	24	140	133
12	6	32 3/8	1 3/16	6 00	75	11 1/4	32	174	167
13	6		1 3/16	6.00	.75	11 1/4			
14	8	6 3/8	1 5/16	8.30	.60	13 1/2	6	78	66
15	8	24 3/8	1 5/16	8 30	.60	13 1/2	24	170	158
16	8	12 3/8	1 5/16	8.30	60	13 1/2	12	85	79
17	8	18 3/8	1 5/16	8.30	.60	13 1/2	18	128	120
18	10	18 3/8	1 3/8	10.26	.68	16	18		
19	12	18 3/8	1 7/16	12.26	.75	19	18		

CAST IRON SPOOLS

A9093

REVISIONS

NO.	DATE	INITIALS	DESCRIPTION	APP'V'D
1	9-1-09	F.S.M.	SUPERSEDES DRWG No 6226	S.W.G.
2	9-1-09	S.W.G.	C/I SPOOLS INCLUDED	S.W.G.
3	2-21-51	S.W.G.	SIZES 4"-30" LONG ADDED	S.W.G.
4	2-5-52	S.W.G.	ITEM 16-17 ADDED	S.W.G.
5	1-3-[illegible]	[illegible]	IT_MS.18-19 ADDED	S.W.G.
6	11-19-78	RDB	REM. F.H. BURY SECTION	R.S.B.
7.	11-29-85	G.S.	ADDED NOTE FOR BOLT HOLES	R.S.B.

DEPARTMENT OF WATER AND POWER
WATER SYSTEM — CITY OF LOS ANGELES

	NAME	DATE
DESIGNED	S.W.G.	9-1-09
DRAWN	K.R.	2-1-52
CHECKED	S.W.G.	9-1-09

APPROVED

NOV 8-5 '78 NAA

Department of Water & Power
of The City of Los Angeles

STANDARD SPECIFICATIONS FOR

Spec. W 220-R2
(Issued 10-23-91)

SLEEVES: TAPPING, BOLT-ON TYPE, WITH FLANGED OUTLETS, FOR CAST-IRON AND DUCTILE-IRON PIPE

Supercedes
Spec. W 220-R1

---

1. Scope: These specifications cover the requirements for cast-iron and ductile-iron machine tapping sleeves for use on 4-inch through 16-inch cast-iron pipe (Class 250, AWWA, Class C-D) and ductile-iron pipe (AWWA, Class 52). Outlet branch sizes range from 4 inches through 12 inches in diameter. The sleeves shall withstand a working water pressure of 200 pounds per square inch.

2. Standards and Specifications: All standards and specifications referred to in these specifications shall be as last revised, unless stated otherwise in these specifications.

3. General Construction: The tapping sleeve shall be a bolt-on type with a single compression seal gasket. One of the halves shall have a flanged outlet. The sleeve size and tap size shall be clearly marked on the sleeve exterior.

4. Component Parts of Sleeves: The sleeve for cast-iron and ductile-iron pipe shall consist of a back half, a flanged outlet half with a ring groove in the inner side, ring sealing gasket, and hex head low-alloy steel attachment bolts and nuts. Bolts shall be of sufficient length to have not less than 3 threads protruding through the nut when the nut is fully torqued on a cast-iron, Class C-D pipe.

5. Materials: Component parts shall be made of the following specified materials:

a. Body: The body shall meet the requirements of ASTM A 536, Grade 70-50-05 for ductile-iron or ASTM A 126, Class B for cast-iron.

* b. Bolts: Bolts shall meet the requirements of ASTM A 193, Grade B8M (Type AISI 316), Class 2, stainless steel bolts.

* c. Nuts: Nuts shall meet the requirements of ASTM A 194, Grade 8M (Type AISI 316), heavy hex, stainless steel nuts.

Note: To prevent galling, the threads on the bolt or on the nut shall be coated with a teflon-based or nylon-based coating.

Note: Asterisk (*) indicates a change.

d. Gaskets: Gaskets shall be neoprene rubber with a Shore durometer hardness between 55 and 60 or EPDM Buna-N.

e. Support Pads: Support pads, if present, shall be neoprene rubber with a Shore durometer hardness between 55 and 60.

6. Grade and Quality of Castings:

a. Castings shall be of a quality and character to make the sleeves strong and tough; shall be of even grain without undue brittleness; and shall be soft enough to permit machining, drilling, cutting, and chipping with reasonable ease. Sleeves shall be sound and smooth and free from swells, cold shuts, scale, lumps, blisters, sand holes, scabs, and defects. The sleeves shall be free from admixture of cinders, slag, or sand. Plugging, filling, burning-in, or other methods to repair defects shall not be used. Welding may be used to eliminate defects, if in the opinion of the Engineer, the sleeve can be repaired without impairing the quality of the casting. Before welding, defects shall be chipped out exposing clean metal.

b. Sleeves that are not machineable and sleeves which, upon machining or chipping, are found to contain defects which cannot be satisfactorily repaired shall be rejected.

7. Flanged End:

a. The flange of the outlet half which faces the flanged end of a 200-psi working water pressure gate valve shall conform in dimensions and drilling to ANSI B16.1, Class 125. The flange face shall not be raised.

b. The flange shall have a serrated finish obtained by using a V-shaped tool. Serrations shall have grooves 1/64 inch in depth and 1/32 inch apart. Serrations may be concentric or spiral.

8. Protective Coating: Interior and exterior surfaces shall be coated with a liquid epoxy coating such as Scotchkote 302 or fusion-bonded epoxy coating such as Scotchkote 134, to a minimum dry-film thickness of 10.0 mils, applied in accordance with the manufacturer's printed instructions. Epoxy coatings shall be electrically-tested for defects with a 67-1/2-volt Tinker and Rasor holiday detector. The Contractor shall repair and retest any defect prior to shipping to ensure a holiday-free coating.

When different back-half sizes are used for different pipe classes, the back-half shall be coated in a color that is clearly identifiable with the pipe class.

9. Shipment: All shipments shall be properly crated, boxed, packed, or otherwise protected to prevent damage in transit and storage. Each package shall be legibly marked with the purchase order number and the name of the supplier. The Department's contract number shall be shown when specified. The shipment shall be made using trucks that will allow a forklift to unload the material from 3 sides of the truck. The tapping sleeves shipped shall be securely banded to nonreturnable wooden pallets. Each tapping sleeve shall be packaged to prevent contact between each sleeve during shipment. Extra spacing or a protective barrier between sleeves may be used to ensure that the epoxy coating will not be damaged during delivery.

10. Inspection and Tests:

a. Access: The Engineer shall have the right to inspect the Contractor's and the subcontractor's work in the course of manufacture or fabrication and shall make such tests from time to time as may be deemed advisable, provided that such tests will cause no delay in the production of acceptable materials or equipment. The Contractor shall furnish, at the Contractor's own expense, reasonable facilities, including tools and instruments for so doing, and for obtaining such information as the Engineer desires, respecting the progress and manner of the work and the character of the materials used.

b. Tests: Two certified copies of mill tests shall be furnished by the Contractor when specified or when requested by the Engineer.

The Department reserves the right to section and test any part of the tapping sleeve furnished. Test results for each part mechanically tested shall be not less than 90 percent of the required values for test bars meeting the requirements specified in Article 5 of these specifications.

c. Hydrostatic Testing:

(1) Cleaning: Prior to hydrostatic testing and coating, all sleeves shall be cleaned of all sand, scale, dirt, grease, other foreign matter, surface impurities, irregularities, rust, and protruding chaplets.

(2) Test Pressure: Sleeves shall be subjected to a test pressure of 400 pounds per square inch and the test pressure maintained for not less than 30 seconds. Fittings that leak or sweat will be subject to rejection.

(3) Pressure Requirements: When bolts are torqued between 90 and 110 foot-pounds, sleeves shall withstand a water working pressure of 200 pounds per square inch.

d. Release: Materials or equipment to be inspected by the Engineer at the Contractor's mill, factory, yard, or warehouse shall not be released for shipment until they have satisfactorily passed the Engineer's inspection and test. Materials or equipment shipped without respecting this requirement may be rejected.

11. Quality Assurance: All materials or equipment furnished and delivered under the contract shall be subject to rigorous inspection by the Engineer. Before offering any material or equipment for inspection or testing, the Contractor shall eliminate all items which are defective or do not meet the requirements of the specifications. If any items or articles are found not to meet the requirements of the specifications, the lot or any faulty portion thereof may be rejected. The fact that the materials or equipment have been successfully inspected, tested, or accepted by the Engineer shall not relieve the Contractor of responsibility in case of later discovery of flaws or defects.

The expense of the initial acceptance tests, after receipt at the Department's specified receiving points, will be borne by the Department. The expense of subsequent tests will be charged against the Contractor when due to failure of first-offered materials or equipment to comply with the specifications.

(END OF STANDARD SPECIFICATIONS)

Department of Water & Power
of The City of Los Angeles

STANDARD SPECIFICATIONS
For

LEAD: COMMON GRADE
FOR CAULKING

Spec. No. W 245-R2
(Revised 12-20-73)

Supersedes
Spec. No. W 245-R1

---

1. General: The lead shall be suitable for caulking of cast-iron pipe joints, uniform in purity, quick melting, free flowing, and pliable, meeting the requirements of ASTM B 29, as last revised, for common desilverized lead.

2. Marking and Packaging:

a. Common grade lead shall be furnished in approximately 25-pound pigs, divided into 5 sections of approximately 5 pounds each, or in approximately 25-pound strings, divided into approximately 5-pound sections.

b. A brand shall be cast or otherwise legibly marked upon each pig, by which the manufacturer may be identified.

c. The manufacturer shall furnish certified weight ticket with each load. The lead shall be delivered on nonreturnable wooden pallets or blocks for fork-lift handling. Each stack shall be plainly marked with the number of pigs or strings.

(END OF STANDARD SPECIFICATIONS)

Department of Water & Power
of The City of Los Angeles

STANDARD SPECIFICATIONS FOR

PIPE: STEEL, ELECTRIC-FUSION, BUTT-WELDED, LINED AND COATED

Spec. W 302-R2
(Revised 10-19-88)

Supersedes
Spec. W 302-R1

---

1. Scope: These specifications cover the manufacture of electric-fusion, butt-welded, lined and coated steel water pipe with either straight or spiral longitudinal weld seams employing either shielded metal-arc welding or submerged arc welding. The lined and coated pipe will be used for the conveyance of water.

These specifications include steel made either in accordance with ASTM A 53 or in accordance with these specifications.

* The pipe shall be furnished in straight sections or special sections, with interior cement-mortar lining and an exterior reinforced cement-mortar coating with coal-tar enamel undercoat, reinforced cement-mortar coating with polyolefin undercoat, polyolefin coating, or as specified in the order.

2. General Requirements:

* a. National Standards: All standards referred to in these specifications shall be as last revised. The pipe furnished under these specifications shall be constructed and tested to meet all of the applicable requirements of ASTM, ASME, AWWA, API, AWS, and SSPWC Standards. In case of conflict, the Department's specifications shall govern.

b. Sections:

(1) Straight Sections: Straight sections shall be fabricated from steel plate joined together by the submerged arc-welding process.

(2) Special Sections: Mitered bevels, angles, branching pipe, tapered sections, and other special sections shall be fabricated from steel plate joined together either by the submerged arc-welding process or by the shielded metal arc-welding process.

c. Definitions: Under these specifications, the following definitions shall apply:.

(1) Butt Joint: Butt joint is a joint between 2 members lying approximately in the same plane.

* (2) Butt Weld: Butt weld is a weld whose throat lies in a plane disposed approximately 90 degrees with respect to the surfaces of not less than one of the parts joined. The size of a butt weld shall be expressed in terms of its net or unreinforced throat dimension in inches. A double welded butt joint is one in which the filler metal is added to both sides. A single welded butt joint is one in which the filler metal is added to one side only.

(3) Filler Metal: Filler metal is the metal to be added in making a weld.

(4) Fusion: Fusion is the melting together of a filler metal and base metal.

(5) Fillet Weld: Fillet weld is a weld approximately triangular in cross section joining 2 surfaces approximately at right angles to each other.

(6) Shielded Metal Arc Welding: An arc-welding process wherein coalescence is produced by heating with an electric arc between a covered metal electrode and the work. Shielding is obtained from decomposition of the electrode covering. Pressure is not used and filler metal is obtained from the electrode.

(7) Submerged Arc Welding: An arc-welding process wherein coalescence is produced by heating with an electric arc or arcs between a bare metal electrode or electrodes and the work. The welding is shielded by a blanket of granular, fusible material on the work. Pressure is not used and filler metal is obtained from the electrode and sometimes from a supplementary welding rod.

d. Material: All material shall be of the quality specified. Any plate or fabricated pipe with scars or injuries from hammering, pits greater than one inch in diameter and deeper than 1/16 inch, laminations greater than 1/32 inch in depth, or any other physical defects that cannot be corrected by welding so as to restore the designed strength will be rejected.

e. Arc Welding Equipment:

(1) Machines: Generators and transformers shall be designed expressly for welding, capable of delivering substantially constant current, and be adjustable through a range ample for the requirements of the work. Generators and transformers shall be provided with devices for controlling the welding current and arc voltage and with meters indicating the amount of each at all times.

(2) Automatic Welding Heads: Automatic welding heads with auxiliary handling equipment to provide control of electrode speed and welding arc shall be subject to the requirements of these specifications.

f. Drawings: The following drawings are a part of these specifications:

A-3821.....Welded Slip Joints

A-1867.....Weld Test Specimens

3. Description of Steel Pipe:

a. General: The steel pipe shall be in accordance with either one of the following:

(1) Electric-resistance welded steel pipe meeting the requirements of ASTM A 53, Type E, Grade A, except for Subitem 16.3. Pipe wall thickness, as measured on inspection, shall neither be less than 3 percent nor greater than 2 percent of the pipe wall thickness specified in the order. The pipe shall meet the requirements of Subarticles 3d through 3h. The hydrostatic test specified in Subarticle 6c of these specifications shall not apply to pipe furnished in accordance with ASTM A 53.

(2) Steel pipe meeting the requirements of Subarticles 3b through 3h.

b. Steel Plate:

(1) Steel plate shall meet the requirements of ASTM A 283, Grade C, or ASTM A 570, Grade 30, except as follows:

(a) That portion of Table 2, Tensile Requirements, of ASTM A 570 relating to thickness, now reading:

"0.2299 to 0.0972, in., incl."

is changed to read:

"0.375 to 0.0972, in., incl."

(b) That portion of Section 8.1 of ASTM A 570 relating to the number of tests now reading:

"Two tension and 2 bend tests shall be made from each heat or lot of 50 tons"

is changed to read:

"One tensile test specimen shall be taken from the approximate center lap; and one tensile test specimen and one bend test specimen shall be taken from the outer lap of the coil. The maximum tensile strength of the specimen taken from the outer lap of the coil shall not exceed 70,000 psi."

(2) Capped or rimmed steels or other such non-killed steels shall not be used.

(3) Steel plate shall be of the specified nominal thickness with a maximum allowable variation of 0.01 inch less than the specified thickness.

(4) The Contractor shall furnish the Department 3 certified copies of mill test reports. Mill test reports shall show results of the chemical and physical tests made on each heat of steel representing the steel plate furnished under these specifications.

(5) The Engineer may require the Contractor to furnish specimen plates of the steel to be used in the fabrication of the pipe. Specimen plates shall be large enough to provide the number of test specimens required in the plate specifications. Should any test specimen fail to meet the requirements of the plate specifications, a second specimen plate shall be furnished. Should any one test specimen from the second specimen plate fail then all plates furnished from the same heat number will be rejected. Tests of these specimens will be made by the Department. The Department will charge the Contractor for all expenses incurred in making the second test.

(6) Plate will be subject to inspection, testing, and approval of the Engineer as to compliance with these specifications prior to fabrication of pipe.

c. Diameter of Pipe: Pipe size may be specified by either the inside diameter or the outside diameter. Pipe shall be manufactured with the diameter specified subject to the tolerances of these specifications. The diameter specified shall be the nominal diameter. The inside diameter of pipe whose outside diameter is specified shall be the nominal outside diameter minus twice the nominal plate thickness. The outside diameter of pipe whose inside diameter is specified shall be the nominal inside diameter plus twice the nominal plate thickness.

d. Filler Metal: The filler metal used in the automatic welding process shall be comparable to and compatible with the base material in its metallurgical properties and mechanical properties. Electrodes for manual welding shall meet the requirements of AWS 5.1, Classification E6010 or E70 Low Hydrogen Series.

e. Lengths of Sections: All straight pipe sections shall be furnished in specified lengths. The Department shall have the right to specify shorter sections for closures and proper location of special sections.

f. Ends of Sections: Ends of straight pipe sections and special sections shall be of the following types as shown on the drawings:

(1) Ends with slip joints for field welding.

(2) Plain or beveled ends for butt welding.

(3) Plain ends for butt straps.

(4) Ends for mechanically coupled field joints.

g. Longitudinal and Girth Seams: Pipe less than 36 inches in diameter shall be fabricated with not more than 3 longitudinal seams. Pipe 36 inches in diameter and larger shall be fabricated with not more than 3 longitudinal seams and not more than 3 girth seams in each section.

h. Special Sections: Curves, tees, branches, transitions, adaptors, fittings, and other special sections shall be fabricated in accordance with the drawings.

i. Double Butt-Welded Coil Ends: Coil ends may be welded together provided they are made with a full penetration double-butt weld and placed at a distance greater than 12 inches from the ends of the pipe. Not more than one coil end weld nor more than a combined total of 3 girth welds and coil end welds shall be used in any one pipe section.

4. Fabrication:

a. General: Pipe fabricated of steel plate shall be shaped to the required curvature and joined by welding. Longitudinal edges shall be lap broken prior to shaping. The desired curvature may be obtained by rolling or forming in a press. The specified diameter of the plate shall not be obtained by hammering. Plates will be inspected before longitudinal seams are welded.

b. Preparation of Plate Edges for Welding:

(1) Edges of plates to be joined by automatic welding shall be cut or formed to the shape required for the particular welding process. Edges of plates to be joined by hand welding shall be formed to the shape shown on drawings or

in accordance with the Contractor's drawings reviewed with no exceptions noted.

(2) The width of the plate before rolling shall not vary by more than 1/16 inch from the width required to obtain the required circumference.

(3) Special sections having abutting plates of different thicknesses shall have the thicker plate prepared so that the apex of the weld groove shall correspond with that of the thinner plate.

(4) All plates shall be cut to size, with all edges straight, uniform, smooth, and free from scale and slag accumulations. All plate edges and surfaces adjacent to the edges to be welded shall be cleaned of oil, grease, rust, and mill scale by wire brushing, sandblasting, or other equivalent methods suitable for the intended purpose.

c. Lap Breaking: The longitudinal edges of all plates shall be lap broken prior to the plate forming operation. The lap breaking operation shall be either by rolls or by a press using dies. The lap breaking operation shall produce a true, uniform curve at the edge of the plate equal to the curve of the pipe shell.

d. Forming of Plate: Plates shall be formed to the proper curvature either by rolling or pressing. The forming operation shall produce a true, uniform, circular curve. Plates will be inspected after forming. Defective plates will be rejected. Plates shall be formed before the seams are welded.

e. Fitting Up: The plates being welded shall be accurately matched and retained in position during the welding operation. The method employed shall result in a finished pipe of circular cross section throughout its entire length. Abutting edges of plate, after welding, shall not have a radial offset (misalignment) greater than 1/32 inch. Tack welds may be used to hold the edges in position, provided the tack weld thickness will permit the tack weld to become thoroughly fused and part of the strength weld in the welding operation.

f. Qualification for Welders and Welding Operator:

(1) All welders and welding operators shall be qualified under the applicable provisions of the standard qualification procedure of the ASME Boiler and Pressure Vessel Code, Section IX.

(2) The Engineer will have the right at any time to call for and witness the making of test specimens by any

welder in accordance with these specifications. The tests shall be at the Contractor's own expense.

g. Welding Procedure Specifications: Welding procedure specifications shall be furnished to the Engineer prior to the welding of pipe. The specifications shall specify the type of plate edge preparation, welding method, arc-voltage, arc-amperes, travel speed, wire size and type, flux type, and all other procedures necessary to make the weld.

h. Welding:

(1) All welds shall be made by a shielded metal arc-welding or submerged arc-welding process. Where required by the Engineer, inspection of the background area by the Contractor shall be made by the Dye Penetrant Method and will be witnessed by the Engineer.

(2) Each layer of welded metal shall be thoroughly cleaned before additional filler metal is applied to its surface. Finished weld bead shall be central to the seam, and the finished joint shall be free from depressions, burrs, undercut edges, irregularities, and valleys. The inner surface of the pipe shall be free from burrs and other irregularities resulting from welding.

(3) The welding process shall produce complete fusion of base metal and filler metal, free from cracks, oxides, and gas pockets within the limits set forth under these specifications.

(4) When welding is interrupted, the weld shall be cleaned and flux redistributed before work is resumed.

(5) The outside weld bead shall be not less than 1/16 inch nor more than 1/8 inch in height above the plate surface. That portion of the outside weld bead exceeding 1/8 inch in height shall be removed by grinding or chipping. All longitudinal and girth welds on the inside of the pipe shall be ground or chipped down so that the height of the weld bead shall be not more than 1/16 inch above the plate surface. The weld bead shall not be ground or chipped below the surface of the plate.

i. Correction to Welds:

(1) Welds found deficient in dimensions, but not in quality, shall be enlarged by additional welding after thoroughly cleaning the surfaces of previously deposited metal and the adjoining plate. When subsequent work has made the weld inaccessible or has caused new conditions which would make such

enlargement inadvisable, the original conditions shall be restored by removal of welds, members, or both, before enlarging the deficient weld.

(2) A defective weld or a weld made contrary to the provisions of these specifications shall be removed and remade throughout its length. The defective weld shall be removed by chipping, cutting, or melting throughout its depth to clean base metal. The melting or chipping shall not extend into the base metal beyond the heat-affected zone. When more than 5 percent of the total length of original weld per pipe section is defective, the section will be rejected.

(3) Burnt metal resulting from melting shall be removed by chipping or grinding to expose clean sound metal.

(4) Overheated filler metal and the overheated base metal adjoining it shall be removed and replaced by new filler metal properly applied. Plate damaged by overheating which cannot be satisfactorily repaired by filler metal shall be replaced.

(5) Repair welds shall be ground to the existing surface contours.

j. Automatic Welding:

(1) All longitudinal, spiral, and girth seams of straight pipe sections and special sections, when practicable, shall be welded by an automatic welding process.

(2) Prior to the start of the automatic welding production for each pipe diameter and plate thickness, the Contractor shall fabricate a section of welded steel cylinder of sufficient length to establish a welding procedure. As directed by the Engineer, weld tests shall be taken of 2 locations from this section. Weld tests will include one reduced section tensile test, 2 guided bend tests, and one spot x-ray at each location. The tests shall be conducted by the Contractor and the results furnished to the Engineer for approval as to compliance with the requirements of these specifications. Should any of the tests fail to meet the requirements of these specifications, corrective adjustments shall be made to the welding procedure, and another test cylinder of sufficient length to establish a revised test procedure shall be made and tested as described above. This procedure shall be continued until the welding procedure meets the requirements of these specifications. Following the approval of a welding procedure, the Contractor may proceed with production.

(3) The Contractor shall prepare and submit to the Engineer the welding procedure established from the welding tests which shall include the type of plate edge preparation, welding method, arc-voltage, arc-amperes, travel speed, wire size and type, flux type, and all other procedures as required. This procedure specification shall be used as a guide in the fabrication of pipe during each shift's production. Minor adjustments may be made to the procedure as necessary to accommodate production variations provided the Engineer is notified of such change.

k. Hand Welding:

(1) Hand welding may be done only when it is not possible to use an automatic welding machine. Hand welding may be done on straight pipe sections to make tack welds, to repair structural defects in the plate, and to repair automatic machine welds, provided the hand welds meet the same testing requirements as for automatic welding.

(2) Fillet welds shall fully penetrate into the corner. Cut back of the plate edges of fillet welds shall not be done. Butt welds shall be made by adding filler metal to both sides of the joint. The backside of the weld shall be chipped out, and all slag and unsound metal removed before additional weld material is placed. Filler metal shall be deposited in successive layers so that there will be a minimum number of passes as there are complete multiples of 1/8 inch in the plate thickness.

l. Preparation of Ends of Pipe:

(1) Slip Joints for Field Welding: Pipe ends with slip joints shall be prepared in accordance with Drawing A-3821. The bell ends shall be pressed or rolled to the required shape without hammering. The length of the straight portion of the bell shall be not less than 3 inches for pipe sizes larger than 24 inches and not less than 1-1/2 inches for pipe sizes 24 inches and smaller.

(2) Ends for Butt Welding: Ends of pipe sections for butt welds shall be prepared in accordance with these specifications and as shown on the drawings.

(3) Ends for Butt Straps: Plain end pipe for butt straps shall have the outside longitudinal welds ground flush with the plate surface for a distance of 6 inches back from the ends.

(4) Ends for Mechanically-Coupled Field Joints: Ends for mechanically-coupled field joints shall be as

specified. The outside of plain end pipe shall be free from objectionable surface defects and shall have the longitudinal welds ground flush with the plate surface for a distance of 10 inches back from the ends. Plain, grooved, or banded ends shall be prepared to fit the type of mechanical couplings to be used.

5. Tolerances:

a. Tolerance for Circumference, Roundness, Joints, Straightness, Length, and Ends: Each section of pipe shall meet the tolerances set forth below, provided, however, that such tolerances do not interfere with the making of the joints.

(1) Circumference:

(a) The circumference of the pipe shall be as computed from the nominal diameter.

(b) The measured circumference of the pipe within 8 inches from each end shall not be more than 1/8 inch greater than the computed circumference nor 1/16 inch less than the computed circumference.

(c) The measured circumference of the pipe, except within 8 inches from each end, shall not be more than 9/32 inch greater than the computed circumference nor 3/32 inch less than the computed circumference.

(2) Field-Welded Slip Joints: The inside diameter of the bell of a slip joint shall be between 1/32 inch and 1/16 inch greater than the outside diameter of the plain end.

(3) Roundness:

(a) Within 8 inches from the ends, the pipe shall not be out-of-round on any diameter by more than plus or minus 0.4 percent of the specified nominal diameter.

(b) Except within 8 inches from the ends, the pipe shall not be out-of-round on any diameter by more than plus or minus one percent of the specified diameter.

(c) Out-of-roundness shall be measured radially on the inside or outside of the pipe with a segmental circular template. The template shall have an arc length equal to 10 percent of the pipe circumference and a radius equal to one-half the specified inside or outside pipe or bell diameter. The maximum permissible radial deviation between the pipe shell and the template shall be 0.5 percent of the specified diameter but not more than 0.25 inch.

(d) Pipe sections that exceed these roundness tolerances may be reconditioned by rolling or by pressure. Reconditioning shall not be done by hammering. Reconditioned sections will be reinspected and retested hydraulically.

(4) Straightness: The alignment of finished pipe sections shall be straight with walls parallel to the axis of the pipe. Pipe sections with a misalignment from a straight line parallel to the pipe axis exceeding 1/8 inch for 10 feet of pipe length will be rejected.

(5) Length: Length of straight pipe sections shall not vary from the specified length by more than 2 inches. Length of special sections shall not vary from the specified length by more than 1/8 inch.

(6) Ends: The ends of pipe sections shall not vary more than 1/8 inch at any point from a plane at right angles to the axis of the pipe.

6. Factory Inspection and Testing of Steel Pipe:

a. General: Any or all tests provided herein to determine compliance with these specifications shall be made under the supervision of and have the approval of the Engineer as to compliance with these specifications. The Contractor shall notify the Engineer a sufficient time in advance of the manufacture or production of materials to be furnished under this contract in order that the Engineer may arrange for mill or factory inspection and testing of same. Materials to be tested and inspected by the Engineer shall not be released for shipment until they have satisfactorily passed the Engineer's inspection and test or until notice has been received from the Engineer that such inspection and testing will not be required. The Contractor shall also furnish to the Engineer, 3 certified copies of all required factory and mill test reports. Any such tests or inspections shall not relieve the Contractor of obligations under the contract.

The Contractor shall bear all expenses of all factory tests on all material furnished. The Department will bear all expenses of final acceptance tests excepting salaries and expenses of the manufacturer's representatives during such tests.

The Engineer shall be notified 5 calendar days prior to the start of pipe fabrication. Pipe shall be fabricated only when the Engineer is present. This requirement may be waived by the Department.

The Engineer will reject any or all pipe sections that do not meet the requirements of these specifications.

The Engineer shall have free access to those parts of all plants that furnish materials or perform work under these specifications.

The Contractor shall furnish the Engineer reasonable facilities and space, without charge, for inspecting, testing, and obtaining information respecting the character of material used and the progress and manner of the work.

b. Weld Tests of Steel Pipe:

(1) General: One set of weld tests of production welds shall be prepared and tested from each shift's production run or 600 linear feet of weld, whichever is smaller, as designated by the Engineer.

(2) Specimen Plates: Test specimen plates shall be large enough to provide the test specimens shown on Drawing A-1867. The pipe area from which the specimen plate is cut shall be repaired by inserting a plate of the same material, thickness, and curvature as the pipe and shall be butt welded in place.

(3) Tests: The test requirements shall be as follows:

(a) Results of Reduced Section Tensile Test: The yield point and ultimate tensile strength shall be not less than the minimum of the specified tensile range of the plate used.

(b) Guided Bend Test: Bend tests shall be performed on both root and face weld specimens. The specimen shall be bent cold without fracture 180 degress around a pin or mandrel, having a diameter 3 times the thickness of the plate, and shall show an elongation of not less than 20 percent across the weld.

(c) Radiographic Test: A 4-1/2-inch by 17-inch spot x-ray shall be taken at a location directed by the Engineer. Procedures and interpretation shall be in accordance with ASME Boiler and Pressure Vessel Code, Section 8, Division I, Part UW51.

(4) Porosity: The maximum acceptable porosity shall be as set forth in Appendix IV of the ASME Boiler and Pressure Vessel Code.

(5) Retest of Welds: Additional weld tests may be required should there be any indication that an unsatisfactory weld has been made. These weld tests shall be made and the results approved by the Engineer as to compliance with these specifications prior to beginning another shift's production.

Retest of welds shall be performed entirely at the Contractor's own expense and shall be made and approved before beginnning the next shift's production in accordance with the following:

(a) Should any of the weld tests taken from the shift's production fail to meet any of the requirements of these specifications, one additional set of weld tests shall be made from each of the adjoining pipe sections.

(b) Should any of the additional tests fail to meet the requirements of these specifications, all pipe sections of that shift's production run will be rejected.

(c) If the additional tests meet the requirements of these specifications, the remaining pipe of the shift's production run shall be deemed acceptable. The original pipe may be reconditioned and resubmitted for inspection and additional tests shall be made on the original pipe.

(6) Reinspection of Pipe Ends: A Section of pipe or any portion of a pipe belled, sized, or otherwise deformed after the hydrostatic test shall have the weld at the ends reinspected in accordance with the API Std. 5LX, Section 7, Paragraphs 7.14 through 7.17, inclusive.

c. Hydrostatic Tests of Steel Pipe:

(1) General: All straight pipe sections, branching pipe sections, tapered pipe sections, and special sections shall be hydrostatically tested. Mitered bends made from straight sections previously tested may have the girth welds examined radiographically in lieu of a hydrostatic test. In all cases, pipe requiring repairs shall be retested in the manner by which the defect was detected.

(2) Procedure: The pipe or special section shall be completely filled with water. Vents shall be provided at the high points for the air to escape while the pipe is being filled. The required pressure shall be maintained for not less than 2 minutes. While under pressure the welded seams shall be inspected for leaks, and each leak location plainly marked. Any section having less than one leak for each 5 feet of welded seam shall have the leaks repaired by chipping the weld and rewelding

by hand, after which the pipe shall be retested hydrostatically. On a retest, the pipe section shall not have any leaks in the welded seams, and if any appear, the section will be rejected. Any section showing more than one leak for each 5 feet of welded seam will be rejected. Leaks shall not be closed by means of a caulking tool. Accepted pipe sections will be marked by the Engineer with a legible identification mark.

(3) Straight Pipe Sections: Each straight pipe section shall be tested hydrostatically to a test pressure determined by the following formula:

$$P = \frac{2st}{D}$$

where

P = Pressure in psi.
s = Allowable fiber stress = 85% of specified minimum yield strength.
t = Wall thickness of pipe in inches.
D = Outside diameter in inches of straight pipe section and the larger outside diameter of tapered sections unless otherwise specified.

(4) Branch Connections, Tapered Pipe Sections, and Special Sections: Each branch pipe, tapered pipe section, and special section shall be hydrostatically tested after fabrication to a pressure of 1-1/2 times the design operating pressure at the point of installation or 100 psi, whichever is higher. Branch connections, tapered pipe sections, and special sections shall be fabricated from straight pipe sections which have previously been tested in accordance with the requirements specified herein for straight pipe sections.

7. Cleaning and Delivery of Steel Pipe Lining and Coating Processes:

a. Cleaning of Steel Pipe: Each section of pipe shall be thoroughly cleaned of loose mill scale, paint, oil, grease, burned flux, molten material, and other foreign substances, both inside and outside.

b. Delivery of Steel Pipe: The steel pipe shall be braced in each end of pipe section when required to prevent damage to the pipe by excessive deformation of the pipe during handling and delivery.

c. Finished Steel Pipe at Delivery Destination:

(1) All steel pipe sections or special sections that show dents, kinks, abrupt changes of curvature other than specified, or injuries at the delivery destination will be subject to rejection. All pipe sections or special sections that have been dropped from a truck or crane prior to completion of delivery will be subject to rejection. The Contractor shall replace, at the Contractor's own expense, such rejected section with an undamaged section or may recondition the rejected section.

(2) Pipe rejected because of substantial damage may be reconditioned by rolling or by pressure, but not by hammering, if the pipe can be returned to its design strength and specified characteristics. Pipe rejected because of gouges, scars, or other minor injuries shall be reconditioned so as to return the pipe to its design strength and specified characteristics in a manner approved by the Engineer. Where reconditioning has required removal and replacement of a weld or reshaping by rolling, the reconditioned area shall be inspected by spot radiographs or retested hydrostatically by the Contractor.

8. Lining and Coating:

a. Cement-Mortar Lining: The interior pipe surfaces shall have cement-mortar lining in accordance with AWWA C205, with the following modifications:

(1) Lining: The lining shall be either brought flush or held back from the spigot or plain end of the pipe and shall be held back from the bell end the distance shown on Drawing A-3821 in accordance with the size of pipe to be cement lined.

(2) Cement: Cement shall meet the requirements of the Department's Standard Specification G 331 for portland cement, Type II.

(3) Sand: Sand shall meet the requirements of AWWA C205.

(4) Cleaning: Immediately prior to the application of the lining, the pipe shall be cleaned of all slime, dirt, loose rust, loose mill scale, and all other foreign materials.

(5) Finish: After the mortar is distributed to a uniform thickness, the rotation speed shall be increased to produce a dense mortar with a smooth surface and a minimum of shrinkage.

b. Coal-Tar Enamel Undercoat: When specified in the order, the coal-tar enamel undercoat shall be in accordance with AWWA C203, Section 2, Coal-Tar Enamel, Hot-Applied. The undercoat shall be held back the following distances from the pipe ends:

Pipe Ends	For Pipe Sizes 4 thru 24 (Inches	Over 24 (Inches)
Spigot or plain	5-1/2	7
Bell	4	4

c. Reinforced Cement-Mortar Coating: When specified in the order, the exterior surfaces of the pipe shall be protected with a reinforced cement-mortar coating in accordance with AWWA C205, with the following modifications:

(1) Cement: Cement shall meet the requirements of the Department's Standard Specifications G 331 for portland cement, Type II.

(2) Sand: Sand shall meet the requirements of AWWA C205.

(3) Curing: As soon as the coating has set sufficiently for the pipe to be moved, the pipe shall be kept moist for a minimum period of 14 days by continuous water spraying or by intermittent water spraying while keeping the pipe covered with canvas or burlap.

The cement-mortar coating shall be brought to within the following distances of the pipe ends:

Pipe Ends	For Pipe Sizes 4 thru 24 (Inches)	Over 24 (Inches)
Spigot or plain	7-1/2	9
Bell	6	6

The wire reinforcement shall extend to the end of the cement-mortar coating but shall not project outside of the coating.

* d. Polyolefin Coating:

(1) General: When specified in the order, the exterior surfaces of the pipe shall be coated with a multilayer

polyolefin coating system. The coating system shall be one of the following systems each as modified herein:

(a) Polyken YG111 System.

*

(b) Plexco X-TRU-COAT System.

(2) Materials and Properties:

(a) Polyken YG111 System: The Polyken YG111 System shall be a multilayer polyethylene system consisting of one layer of pipeline coating primer, Non-Flammable No. 929-S; one layer of pipeline coating tape, No. 989 Innerwrap 20; and one or more layers of pipeline coating, No. 956 Outerwrap 30.

[1] Primer: The Non-Flammable No. 929-S primer shall be fast drying and shall form an instantaneous, firm bond when the adhesive on the innerwrap tape comes into contact with the primed pipe surface. For optimum bonding, the primer shall be dry-to-touch at the time the tape innerwrap is applied over the primer. The physical properties of the primer shall be as follows:

Physical Properties	Requirements
Total solids:	
Material	Rubber and synthetic resins
Percent, min	10.6
Nominal weight per gallon, pounds, min	10.65
Viscosity	"Thin syrup"
Flash point	None
Drying time, sec, max	60

[2] Pipeline Coating Tape (Innerwrap): The No. 989 Innerwrap 20 tape shall consist of a polyethylene backing with a butyl-based adhesive laminated to one side of the backing film. The polyethylene backing film and adhesive shall be made by the calendaring system to assure maximum bonding of the adhesive to the backing film. The adhesive shall be formulated to form an instantaneous, firm bond when it contacts the primed pipe surface. The physical and performance properties of the innerwrap tape shall be as follows:

Physical Properties	ASTM Method	Requirements
Total thickness, nominal, mils	---	20
Backing film:		
Material	---	Low- or high-density polyethylene
Color	---	Black
Thickness, nominal, mils	---	9
Adhesive:		
Material	---	Butyl rubber and synthetic resin
Thickness, nominal, mils	---	11

Performance Properties	ASTM Method	Requirements
Tensile strength, lb/in width, min	D 1000	30
Elongation, percent, min	D 1000	200
Adhesion to primed steel, oz/in width, min	D 1000	200
Dielectric strength, volts/mil of thickness, min	D 149	100
Water transmission rate, g/100 sq in. in 24 hours	E 96	0.01 to 0.2
Operating temperature for normal service	---	-30F to +200F

[3] Pipeline Coating Tape (Outerwrap): The No. 956 Outerwrap 30 tape shall consist of a polyethylene backing film with a butyl-based adhesive laminated to one side of the backing film. The polyethylene backing film and the butyl adhesive shall be made by the calendaring process to assure maximum bond of the adhesive to the backing film. The adhesive on the outerwrap shall form a firm, continuous bond to the backing film of the innerwrap tape. The physical and performance properties of the outerwrap tape shall be as follows:

Std. Spec. W 302-R2

Physical Properties	ASTM Method	Requirements
Total thickness, nominal, mils	---	30
Backing film:		
Material	---	Low- or high-density polyethylene
Color	---	White
Thickness, nominal, mils	---	25
Adhesive:		
Material	---	Butyl rubber and synthetic resin
Thickness, nominal, mils	---	5

* Performance Properties	ASTM Method	Requirements
Tensile strength, lb/in width, min	D 1000	55
Elongation, percent, min	D 1000	200
Adhesion to backing, oz/in width, min	D 1000	78
Dielectric strength, volts/ mil thickness, min	D 149	1000
Water vapor transmission rate, g/sq in. in 24 hours, max	E 96	---
Operating temperature for normal service	---	-30F to +200F

*

(b) Plexco X-TRU-COAT System: The Plexco X-TRU-COAT System shall be a multilayer system consisting of a layer of modified rubber-blend primer adhesive and an extruded jacket of polyethylene material.

[1] Rubber-Blend Adhesive: The physical and performance properties of the rubber-blend primer adhesive shall be as follows:

Physical Properties	ASTM Method	Requirements
Thickness, nominal, mils all pipe class	---	10
Compound:		
Material	---	Modified rubber-blend thermoplastic
Color	---	Black

[2] Polyethylene Extruded Jacket: The physical and performance properties of the extruded polyethylene jacket shall be as follows:

* Physical Properties	ASTM Method	Requirements
Thickness, nominal, mils all pipe sizes	---	60 (actual 54-66)
Jacket:		
Material	---	Prime, virgin, high-density polyethylene
Color	---	Yellow

* Performance Properties	ASTM Method	Requirements
Tensile strength, psi, min	D 638	3000
Elongation, percent, min	D 638	100
Water vapor transmission rate, g/100 sq in. in 25 hours, max	E 96	0.0001
Dielectric strength, volts/mil of thickness, min	D 149	1000
Operating temperature for normal service	---	-40F to +150F

(3) Surface Preparation: The pipe shall be dried by preheating prior to cleaning. The exterior surfaces to be coated shall be thoroughly cleaned of all, grease, oil, rust, mill scale, dirt, and all other foreign substances. Oil or

grease shall be removed before mechanical cleaning by swabbing the surfaces with Chlorothane N.U. The exterior surface of the pipe shall then be mechanically cleaned with sand or grit or by shot blasting in accordance with Steel Structures Painting Specifications No. SP6. Pipe sections shall then be cleaned of all steel shot, sand, or dust remaining on the exterior or interior surfaces.

Following cleaning, each length of pipe shall be inspected for dents, gouges, grooves, and slivers. All defects shall be repaired or corrected to provide proper bond and integrity of the coating system to be applied.

At the Contractor's option, preparation of steel surfaces and the subsequent coating application may take place before or after the application of the cement-mortar lining; however, any damage resulting to the lining or coating, by reason of the sequence of their application, shall be repaired.

(4) Coating Application:

(a) Hold Backs: Pipe ends shall be protected from any contact with primer, adhesive, or coating for the specified distances. The method of protecting such areas shall be subject to the approval of the Engineer as to compliance with this requirement.

Pipe Ends	For Pipe Sizes 4 thru 24 (Inches)	Over 24 (Inches)
Spigot or plain	5-1/2	7
Bell	4	4

(b) Polyken YG111 System:

[1] Primer: Primer shall be applied to the cleaned pipe surface as a thin film at a coverage rate of approximately one gallon per 800 square feet of tape applied. The primer shall be thoroughly mixed prior to application and shall be agitated during application to prevent segregation. The primer may be applied by spray or with other suitable methods to obtain uniform coverage on the pipe surface. The No. 9295 primer may be thinned with Chlorothane N.U. only when necessary to restore the primer to the original content of the solids. Thinning shall not exceed one part primer to one part thinner. The primed pipe surface shall be free of all cleaning grit, dirt, rust, or other substances that would prevent intimate contact with the innerwrap tape application.

[2] Innerwrap: The No. 989 Innerwrap 20 tape shall be applied with suitable mechanical equipment that will attach the tape to the pipe with a minimum of 10 pounds of tension per inch of tape width. The application shall produce a smooth, wrinkle-free covering. The tape shall be applied at a minimum roll temperature of 70F. Optimum roll temperature during application is 70F to 95F. The tape shall be spirally applied with a one-inch overlap and plus 1/4-inch tolerance. The end lap of each new roll shall overlap the end of the preceeding roll by a minimum of 6 inches. The end lap shall be hand-applied or applied with suitable mechanical equipment to produce a wrinkle-free lap joint. The spiral angle shall parallel the spiral angle of the previous roll. Machine adjustments, including brake tension, shall be made and maintained to continuously accomplish a uniform, tight, smooth, wrinkle-free coating. The tape-width drawdown shall not exceed 5/8 inch.

[3] Outerwrap: The No. 956 Outerwrap 30 tape shall be applied simultaneously and in the same manner as the innerwrap tape. The spiral lap joints of the 2 tapes shall not occur on top of each other. The outerwrap tape shall be applied under 12 to 14 pounds of tension per inch of tape width.

*

(c) Plexco X-TRU-COAT System:

[1] Adhesive: As a part of a continuous operation and immediately following cleaning and surface preparation, the modified rubber-blend compound shall be applied to the pipe surface with a thickness of 10 mils. The temperature of the pipe surface and the thermoplastic adhesive shall be maintained at levels to insure optimum adhesion and continuous coverage of the cleaned pipe surface.

[2] Polyethylene Extruded Jacket: As a part of a continuous operation and immediately following the adhesive application, the adhesive coated pipe shall be moved through a crosshead extrusion die for application of the polyethylene jacket. The speed of the pipe shall be carefully controlled to insure a uniform, void free jacket thickness. Temperature of the polyethylene material shall be carefully controlled to provide the required thickness and physical properties. Following the coating operation, the pipe may be cooled by water quenching. If insufficient clearance through the extrusion die prohibits extrusion coating of pipe with belled ends, the pipe may be belled after coating. If belling is done after coating, any damage to the coating or cement lining shall be repaired.

9. Inspection of the Cement-Mortar Lined and Coated Welded Steel Pipe:

a. General: The Department's Engineer shall at all times have the right to inspect the work in the course of application of the lining and coating to the welded steel pipe and make such tests from time to time as may be advisable providing no delay in production of acceptable materials or equipment is caused thereby. The Contractor shall furnish, at the Contractor's own expense, reasonable facilities including tools and instruments for so doing and for obtaining such information as the Engineer desires respecting the progress and manner of the work and the character of the materials used. However, final inspection will be made upon receipt at the Department's specified receiving points; and, if any materials or equipment do not meet the requirements of these specifications, the lot or any faulty portion thereof may be rejected.

Before offering a lot for inspection, the manufacturer shall eliminate any portion which is defective or does not meet the requirements of the specifications. All expense of the initial acceptance test will be borne by the Department. The expense of subsequent tests due to failure of materials or equipment first offered will be charged against the Contractor. The fact that the materials or equipment have been successfully inspected, tested, and accepted by the Engineer shall not relieve the Contractor of responsibility in the case of later discovery of flaws or defects.

* b. Test of Coating System: Upon completion of the coating or extrusion-coating operation, each length of coated pipe shall be visually inspected and shall have the entire coated surface tested with an electrical holiday tester for holidays, thin spots, or damage. The tester shall be operated at the following minimum voltages:

Coating System	Volts (Minimum)
Polyken YG111	6,000
Plexco X-TRU-COAT	10,000

All testing shall be performed in the presence of the Engineer.

c. Repairs: All holidays and other defects observed or holidays detected during inspection shall be repaired.

10. Delivery of the Cement-Mortar Lined and Coated Welded Steel Pipe: The bracing, transporting, and handling of the lined and coated pipe shall be in accordance with Subarticle 7b.

11. Shipping and Handling of Lined and Coated Welded Steel Pipe: The lined and coated welded steel pipe shall be handled, stored, and shipped by the Contractor in a manner that will prevent damage to the coating, lining, pipe, and pipe ends. The pipe shall be hoisted by means of wide belt slings. Chains, cables, tongs, hooks, or other devices likely to cause damage to the lining or coating shall not be used. Pipe shipped from the coating yard shall employ sufficient dunnage, covers, padding, and banding to preserve the integrity of the pipe coating during shipment to the point of receipt by the Department.

Note: Asterisk (*) indicates changes in the paragraph.

(END OF STANDARD SPECIFICATIONS)

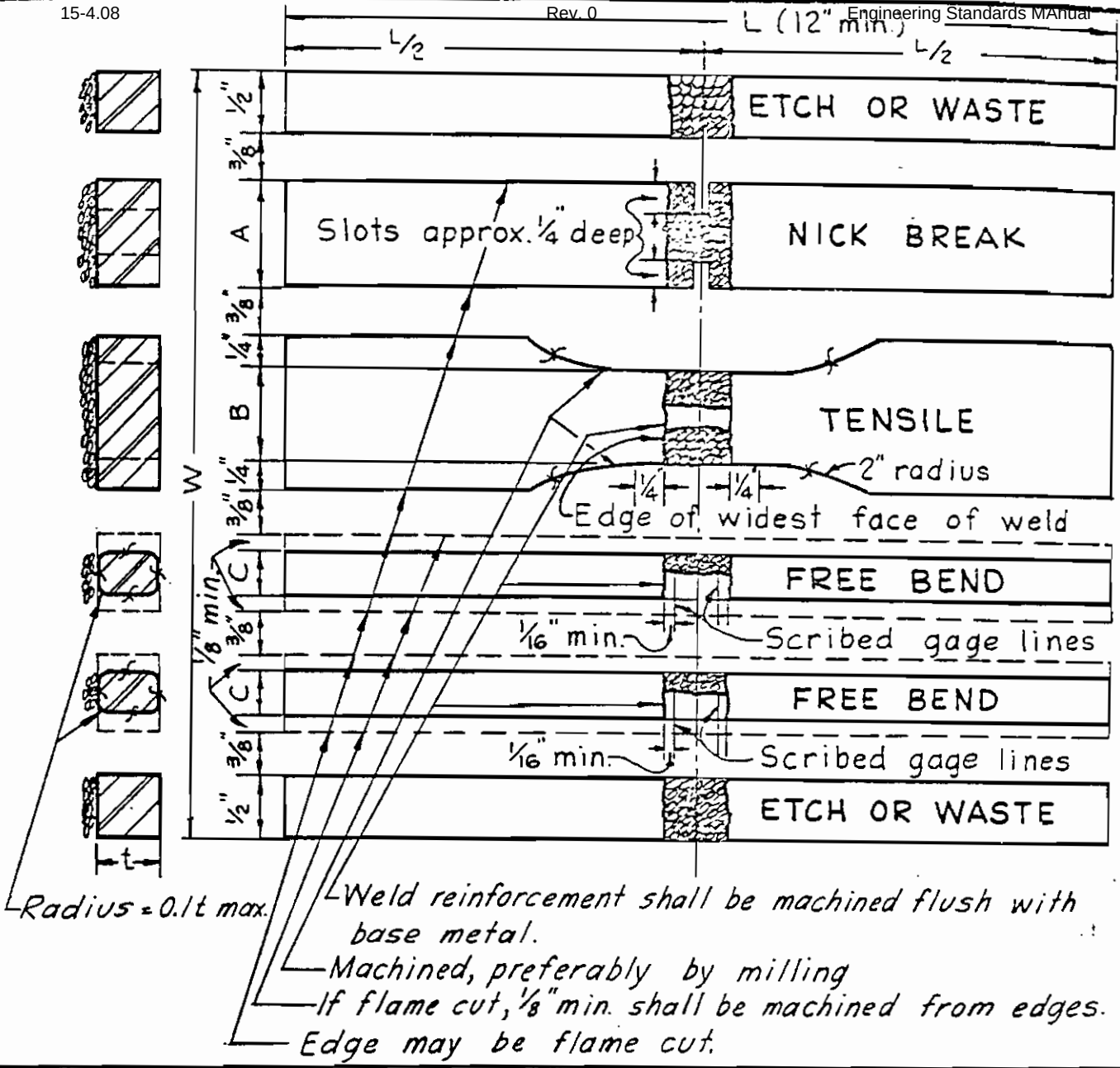

t inches	1/4"	5/16"	3/8	7/16	1/2	9/16	5/8	11/16	3/4	13/16	7/8	15/16	1	1 1/16	1 1/8	1 3/16	1 1/4
A "	7/8	31/32	1 1/16	1 7/32	1 1/4	1 11/32	1 7/16	1 17/32	1 5/8	1 23/32	1 13/16	1 29/32	2	2 3/32	2 3/16	2 9/32	2 3/8
B "	1 1/2	1 1/2	1 1/2	1 1/2	1 1/2	1 1/2	1 1/2	1 1/2	1 1/2	1 1/2	1 1/2	1 1/2	1 1/2	1	1	1	1
C "	3/8	15/32	9/16	21/32	3/4	27/32	15/16	1 1/32	1 1/8	1 7/32	1 5/16	1 13/32	1 1/2	1 19/32	1 11/16	1 25/32	1 7/8
L "	12	12	12	12	12	12	12	12	12	12	12	12	12	13 1/2	13 1/2	13 1/2	13 1/2
W "	7	7 9/32	7 9/16	7 29/32	8 1/8	8 13/32	8 11/16	8 31/32	9 1/4	9 17/32	9 13/16	10 3/32	10 3/8	10 5/32	10 1/2	10 23/32	11

(NOTE: FOR WELD TEST SPECIMENS LESS THAN 1/4" THICK SEE A-2082)

WELD TEST SPECIMENS - BUTT WELD PLATE 1/4-INCH TO 1 1/4-INCH THICK

0

A1867

REVISIONS				
NO.	DATE	IN'TL'S.	DESCRIPTION	APP'V'D
1	6-67	G.H.	Drawing of 3-24-55 Revised	E.S.

DEPARTMENT OF WATER AND POWER
WATER SYSTEM — CITY OF LOS ANGELES

	NAME	DATE	APPROVED
DESIGNED	H.A. PRICE	5-44	
DRAWN	G. HARRELL	3-67	
CHECKED		6-67	

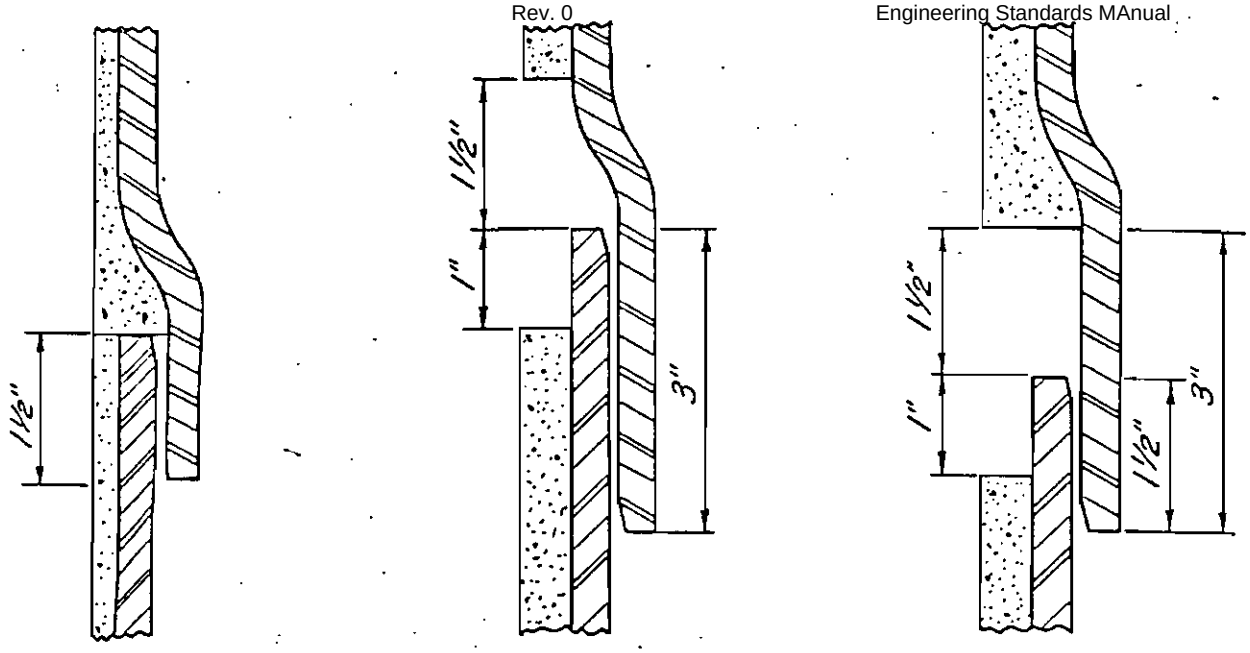

"SS" "DL" "LS"

TYPICAL SLIP JOINTS

TYPE SS JOINT IS FOR PIPE SIZES UP TO AND INCLUDING 24 INCHES IN DIAMETER

TYPE LS JOINT IS FOR PIPE OVER 24 INCHES IN DIAMETER

TYPE DL JOINT, WHEN SPECIFIED, IS FOR EVERY TENTH LENGTH OF PIPE OVER 24 INCHES IN DIAMETER

NOTES

1. OUTSIDE EDGE OF PLAIN END AND INSIDE EDGE OF BELL SHALL BE SCARFED OR GROUND SLIGHTLY
2. LONGITUDINAL WELDS ON THE OUTSIDE OF THE PLAIN END AND THE INSIDE OF THE BELL SHALL BE GROUND TO PLATE THICKNESS FOR THE LENGTH OF THE LAP
3. INSIDE DIAMETER OF BELL SHALL BE BETWEEN 1/32 AND 1/16 OF AN INCH GREATER THAN OUTSIDE DIAMETER OF THE PLAIN END FOR THE LENGTH OF THE BELL
4. LENGTH OF BELL SHALL BE NOT LESS THAN 1-1/2" FOR TYPE SS
5. LENGTH OF BELL SHALL BE NOT LESS THAN 3" FOR TYPE LS AND TYPE DL

THIS DRAWING SUPERSEDES A 6765-8.

WELDED SLIP JOINTS

0

REVISIONS				
NO.	DATE	IN'TL'S.	DESCRIPTION	APP'V'D

DEPARTMENT OF WATER AND POWER
WATER SYSTEM CITY OF LOS ANGELES

	NAME	DATE	APPROVED
DESIGNED	J.S. G.R.H. OND.	3/63	
DRAWN	W.I. LeBlanc	3/63	
CHECKED	J.S. & P.A.	3/63	

A 6765-8

Department of Water & Power
of The City of Los Angeles

STANDARD SPECIFICATIONS
For

CEMENT: PORTLAND, TYPE II

Spec. No. G 331-R6
(Rewritten 6-23-75)

Supersedes
Spec. No. G 331-R5

---

1. Scope: The portland cement shall meet the requirements of ASTM C 150, Type II, as last revised, except as modified and supplemented herein.

2. Free Calcium Oxide: The free calcium oxide content shall not exceed 1.5 percent for cement.

3. Total Alkalies - Sodium Oxide and Potassium Oxide: The total alkalies, considered as the sum of the sodium oxide and potassium oxide, with the latter calculated and included as sodium oxide, shall not exceed 0.6 percent.

4. Sampling and Testing:

a. The Contractor at his own expense shall provide for sampling and testing the cement under the direct supervision of a civil engineer registered as such in the State of California and qualified as an expert in cement testing. Cement mill laboratories may be approved by the Department for this purpose when evidence has been submitted to show that they are qualified to perform such tests.

b. All sampling and testing shall be done in accordance with ASTM C 183, as last revised, except as modified herein. Methods of chemical analysis shall be in accordance with ASTM C 114, as last revised. Unless otherwise specified in the order or required by the Engineer, a test sample of cement taken from bulk storage in a bin, silo, the conveyor delivering to bulk storage, or from sacks from the jobsite shall represent not more than 200 tons (4,255 sacks).

c. Tests shall be made and reported covering all standard and optional chemical requirements and standard physical requirements, as set forth in ASTM C 150, as last revised.

d. A 2-pound sample of cement for each 200 tons, (4,255 sacks) or fraction thereof, of cement furnished shall be delivered to the Department's Materials Testing Laboratory, 510 East Second Street, Los Angeles, California. Samples shall be taken in the manner provided for in Subarticle 4b above.

e. All samples shall be clearly identified as to the test reports that apply to the lot with the lot number indicated on each sample.

5. Test Reports: Three certified copies of reports of the required tests shall be mailed to the Department of Water and Power, Water System, Materials Testing Laboratory, 510 East Second Street, Los Angeles, California 90051.

6. Los Angeles City Building Code: Before delivering each order of cement within the City of Los Angeles, the Contractor shall file with the Superintendent of Building the certificate of identification required in Section 91.2610 of the Los Angeles City Building Code.

7. Packaging: Unless otherwise specified in the order, the cement shall be delivered in substantial paper sacks, each containing 94 pounds net weight.

(END OF STANDARD SPECIFICATIONS)

Department of Water & Power
of The City of Los Angeles

STANDARD SPECIFICATIONS
For

AGGREGATE: FOR CONCRETE
AND OTHER USES

Spec. No. G 391-R3
(Revised 12-10-70)

Supersedes
Spec. No. G 391-R2

---

* 1. Scope: These specifications cover the following rock products and untreated base material:

* a. Rock Products:

(1) Sand for mortar and plaster.

(2) Sand for portland cement concrete and other uses.

(3) Sand for gunite concrete.

(4) Concrete aggregate for portland cement concrete.

(5) Crushed rock for portland cement concrete and other uses.

* b. Untreated Base Material: Crushed Aggregate Base for use under slabs, for subbase, driveways and parking areas, as track ballast, and as a base course for pavement.

* 2. General Requirements: The aggregate shall be in accordance with Section 200-Rock Materials of the Standard Specifications for Public Works Construction, as last revised, except as modified herein, written and promulgated by the Southern California Chapter American Public Works Association and Southern California District Associated General Contractors of California Joint Cooperative Committee.

3. Alkali-Reactive Substance Test: Aggregate for use in mortar, plaster, gunite, and portland cement concrete shall not contain alkali-reactive substances in amounts which will produce a ratio of Sc/Rc greater than 1.0, when determined by ASTM C 289, as last revised.

4. Soundness: Aggregate for use in mortar, plaster, gunite, and portland cement concrete shall meet the requirements for soundness as specified in ASTM C 33, as last revised.

5. Requirements for Tests: All tests provided for herein, or deemed necessary by the Engineer to determine compliance with these specifications shall be made at the Contractor's expense, except as to the compensation and expense of any representative of the Department. All tests shall be supervised

and approved by the Engineer, or at his option, certified factory tests may be accepted in lieu thereof. The Engineer shall have the right to be present to check and record data obtained so long as no delay or extra expense is caused the Contractor.

6. Test Reports: Three certified copies of reports of the required tests shall be mailed to the Department of Water and Power, Water System, Specifications Section, Room 1452, P.O. Box 111, Los Angeles, California 90054.

7. Inspection: Inspection may be made at the screening plant, the bunker, or upon delivery of material to the building site. No material shall be delivered until the pit source has been approved, and the plant capacity and facilities to produce a uniform and continuous product have been verified.

8. Rejection: In case material submitted for any of the tests does not comply with these specifications in every respect, the entire lot from which the samples were taken shall be replaced at the expense of the Contractor with material which will meet all requirements. The expense of removing rejected material shall be borne by the Contractor, and upon notice of rejection of any such material, he shall remove the same promptly from the premises. If the Contractor shows lack of diligence in promptly removing said rejected material, the same will be removed by the Department and the expenses incurred therein shall be borne by the Contractor. Neither inspection, waiving of inspection, nor the Department's acceptance shall relieve the Contractor from the obligation to furnish material in full accordance with these specifications.

9. Delivery: Delivery shall be as follows:

a. All Aggregates: The quantities of all aggregates required and delivered will be specified in tons of 2000 pounds. Each truck shall be loaded from one bunker or stockpile and the size distribution of the aggregate shall be consistent throughout the stockpile or bunker. The Contractor shall assume full responsibility for delivery of correct grades in quantities as ordered. A Public Weighmaster's Certificate shall be furnished with each load of material.

b. Sand: Sand shall not be loaded, weighed or delivered directly from the washing process, nor shall the sand be weighed or delivered while containing an excessive amount of water. The method of determining the water content shall be to fill a vertical walled container to one-fifth its depth with water, pour the sand to be tested into the water slowly, stirring continuously to eliminate entrapped air, and bring the level of the sand to the rim of the container. If the water level

has not passed the rim of the container, the moisture content of the sand shall be deemed to be within the allowable limit. The sample for the test shall be taken from the bottom of the load at any such point as the Engineer may choose. This test allows approximately eight percent by weight of water, based on dry weight of the sand.

Note: Asterisk (*) indicates changes in a paragraph.

(END OF STANDARD SPECIFICATIONS)

Department of Water & Power
of The City of Los Angeles

STANDARD SPECIFICATIONS FOR TUBING: COPPER WATER

Spec. W 1021-R8
(Rewritten 10-11-79)

Supersedes
Spec. W 1021-R7

---

1. General: These specifications cover the requirements for 3/4-inch, 1-inch, 1-1/2 inch, and 2-inch seamless, annealed, Type K, copper water tubing.

2. National Standard: Copper tubing shall meet the requirements of ASTM B 88, as last revised, except as modified herein.

3. Dimensions and Tolerances: Copper tubing shall be furnished in coils or straight lengths and shall conform to the dimensions and tolerances as follows:

Standard Size (Inches)	Furnished In	Nominal Length (Feet)	Length Tolerance	Minimum Coil Size (Inches) ID	OD
3/4	Coils	60 or 100	+2 feet	24	30
1	Coils	60 or 100	+2 feet	24	30
1-1/2	Straight Lengths	20	+1 inch	--	--
2	Straight Lengths	20	+1 inch	--	--

4. Temper: Each nominal length of copper tubing shall be furnished in the annealed condition in accordance with the mechanical property requirements of ASTM B 88. Straight lengths shall be annealed after being drawn. Coiled lengths shall be annealed after being coiled.

5. Product Identification: In addition to meeting the identification requirements of ASTM B 88, each nominal length of copper tubing shall have the letters "DWP" stamped into the metal at intervals of approximately 12 inches.

6. Packaging:

a. General: Each packaged unit shall contain one size of tubing only. Each unit shall be packaged so as to provide maximum protection in the process of shipping, handling, forklift handling, and stacking as utilized in standard warehousing procedures.

b. Tubing in Coils: Tubing specified to be furnished in coils shall be coiled flat and shall be in standard nominal lengths. The copper tubing shall be packaged in wooden boxes or on pallets. Tubing furnished in wooden boxes in bulk packaging shall have each layer of tubing separated by a sheet of corrugated cardboard at least 1/8 inch thick. The boxes shall have dunnage boards attached parallel to the outside edges of the box. The dunnage boards shall be a minimum of 30 inches apart. Tubing coils furnished on pallets shall be packaged in individual cartons plainly marked to show type, size, and length. Each pallet shall be approximately 1000 pounds when fully loaded.

c. Tubing in Straight Lengths: Tubing specified to be furnished in straight lengths shall be packaged in wooden boxes. The wooden boxes shall be constructed and braced for stacking and storing a minimum of 4 high and shall have 5 full-width 2-inch by 4-inch dunnage boards attached to the bottom of the boxes. The boards shall be parallel to each other and at right angles to the length of the box approximately 5 feet apart.

d. Truck-Delivered Material: Material delivered by truck shall be set on dunnage boards of sufficient size to provide a 3-inch to 4-inch clearance between the material stack and the truck bed. Truck-delivered material shall be loaded so that a forklift can readily unload from the side as well as the rear of the truck.

7. Inspection: All materials or equipment furnished and delivered under the contract shall be subject to inspection by the Department's Engineer. If any items or articles are found not to meet the requirements of the specifications, the lot, or any faulty portion thereof, may be rejected. Before offering a lot for inspection, the manufacturer shall eliminate any items which in his opinion are defective or do not meet the requirements of the specifications. The fact that the materials or equipment have been successfully inspected, tested, and accepted by the Engineer shall not relieve the Contractor of responsibility in the case of later discovery of flaws or defects.

Materials or equipment purchased under the contract will be inspected at the Department's specified receiving points and there accepted or rejected. Inspection will include the necessary testing for determining compliance with the specifications. All expense of initial acceptance tests will be borne by the Department. The expense of subsequent tests due to failure of materials or equipment first offered will be charged against the Contractor.

(END OF STANDARD SPECIFICATIONS)

Department of Water & Power
of The City of Los Angeles

STANDARD SPECIFICATIONS
For

FITTINGS: BRONZE WATER WORKS, 2-INCH AND SMALLER

Spec. W 1022-R4
(Rewritten 9-10-86)

Supersedes
Spec. W 1022-R3

---

1. General:

a. These specifications cover bronze water works fittings, 2-inches and smaller in size, for cold-water service 200 pounds per square inch working water pressure.

b. The term "fittings" as used in these specifications shall apply to machined or assembled bronze castings, including certain valves for water service.

c. The bronze fittings shall be constructed to the style and dimensions as shown on the drawings. Dimensions shown on the drawings are minimum dimensions unless otherwise specified. Minor variations may be made in the configuration of the fittings, provided that the operation and use of fittings is not affected, and the strength under various tests shall not be less than the strength of the fittings would be if constructed to the exact dimensions as shown on the drawings.

d. The specifications and drawings referred to are intended to supplement each other and any details indicated in one and not in the other shall be executed the same as if indicated in both. In case of conflict between these specifications and the drawing referred to, the latter shall govern in determining the point at issue, with the exception that the tolerances for weight and composition as specified herein are the governing factors.

2. National Standards: The fittings shall be in accordance with ASTM B 62, as last revised, Copper Alloy UNS No. C83600, except as modified herein.

3. Materials and Workmanship:

a. The material shall be as specified and the fittings shall be manufactured in a thoroughly workmanlike manner. The fittings shall be sound, clean, free from blow holes, porous places, cracks, or any other defects indicative of inferior workmanship or poor quality.

b. All threads shall mesh snugly, be clean cut, be of uniform pitch, and where they are to be used in connection with standard pipe, they shall be ANSI taper pipe thread, NPT. All other threads shall be as shown on the drawings and shall

exactly fit the various parts with which they are to be connected.

c. All valves shall be carefully cored and machined to insure evenly balanced walls. The keys shall be properly machined and ground and shall be well covered by a non-corrosive non-toxic grease.

4. Hydrostatic Test: All valves shall be given a hydrostatic pressure test of 200 pounds per square inch under which they shall be easily opened and closed and under which they shall be entirely free from leaks at any point.

5. Weights: All weights shown on the drawing are nominal weights, and the weights of the fittings shall be not more than 5 percent under the nominal weights nor more than 8 percent greater than the nominal weights.

6. Identification or Marking: All bronze fittings shall be identified with the letters "LAW" cast into the fittings, where practicable. The letters "LAW" may be stamped where they cannot be cast into the fittings.

7. Quality Assurance: The Department's Engineer shall at all times have the right to inspect the work in the course of manufacture and make such tests from time to time as may be deemed advisable, providing no delay in production of acceptable materials or equipment is caused thereby. The Contractor shall notify the Contract Inspection Engineer on Telephone Number (213) 481-6208. The Contractor shall furnish, at no cost to the Department, reasonable facilities including tools and instruments for so doing and for obtaining such information as the Engineer desires respecting the progress and manner of the work and the character of the materials used. However, final inspection will be made upon receipt at the Department's specified receiving points.

All materials or equipment furnished and delivered under the contract shall be subject to rigorous inspection by the Engineer. Before offering any material or equipment for inspection or testing, the Contractor shall eliminate all items which are defective or do not meet the requirements of the specifications. If any items or articles are found not to meet the requirements of the specifications, the lot, or any faulty portion thereof, may be rejected. The fact that the materials or equipment have been successfully inspected, tested, or accepted by the Engineer shall not relieve the Contractor of responsibility in case of later discovery of flaws or defects.

The expense of the initial acceptance tests will be borne by the Department. The expense of subsequent tests will be charged against the Contractor when due to failure of first-offered materials or equipment to comply with the specifications.

(END OF STANDARD SPECIFICATIONS)

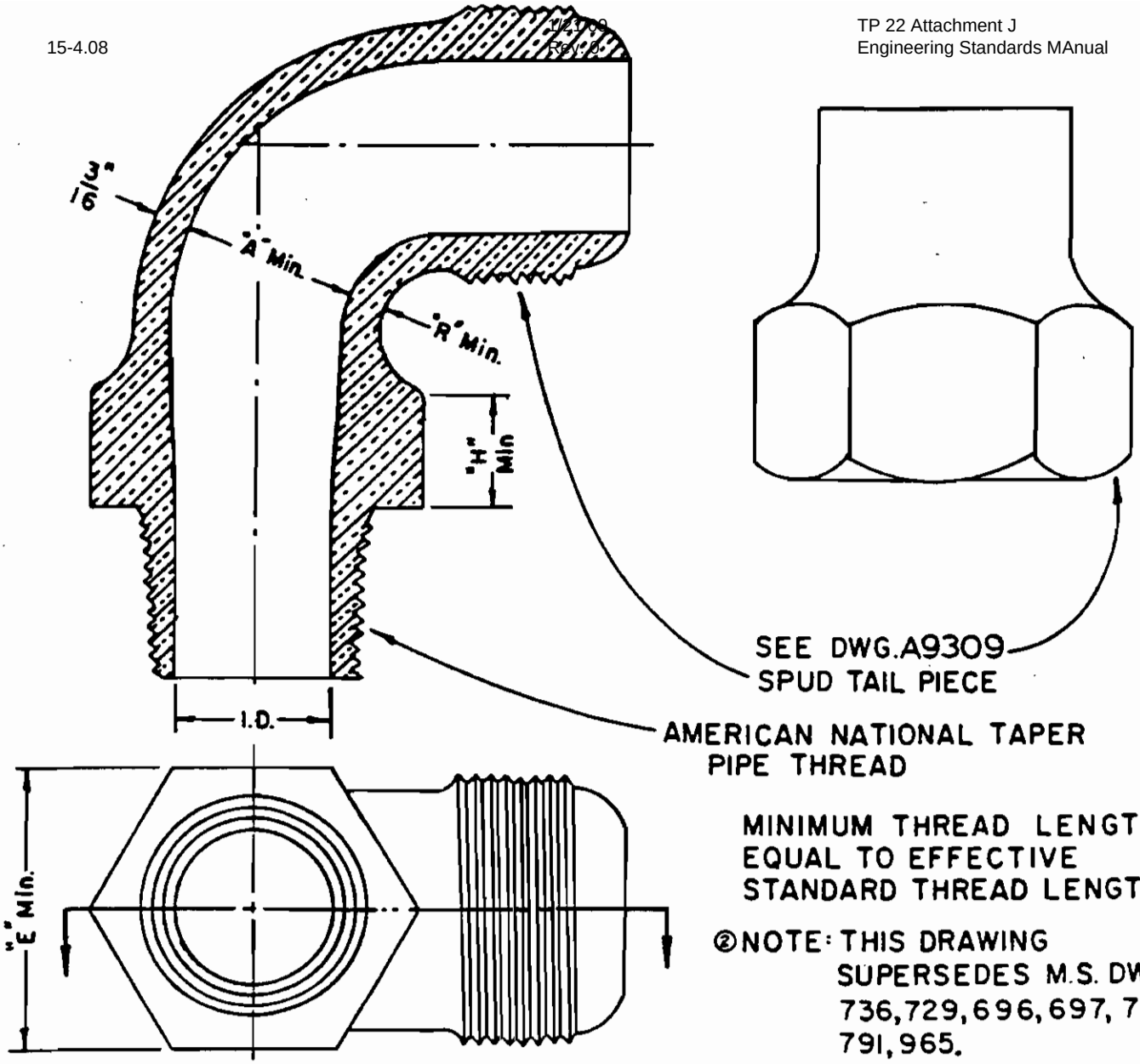

MINIMUM THREAD LENGTH EQUAL TO EFFECTIVE STANDARD THREAD LENGTH.

②NOTE: THIS DRAWING SUPERSEDES M.S. DWGS. 736, 729, 696, 697, 798, 791, 965.

DIMENSIONS IN INCHES

SIZE	1/2	1/2 x 3/4	3/4	1	1 1/2	2
"A" min.	1/2	3/4	3/4	1	1 1/2	2
"R" min.	5/16	3/8	3/8	7/16	1/2	9/16
I.D.	1/2	1/2	11/16	7/8	1 3/8	1 7/8
"H" min.	7/16	9/16	5/8	11/16	3/4	3/4
"E" min.	1	1 1/8	1 1/4	1 5/8	2 1/4	2 7/8
N.P.T.	1/2	1/2	3/4	1	1 1/2	2
Size on A9309	1/2	3/4	3/4	1	1 1/2	2

WORKING TITLE: ELL, B.B.S.

ELBOW-BRONZE-MALE COPPER TUBING FITTING TO MALE STD. N.P.T.

A 137

NO.	DATE	INITIALS	REVISIONS DESCRIPTION	APP'D
1	11-46	FSM	TITLE REVISED	SNB
②	11-72	RFC	REDRAWN & RENUMBERED	[illegible]

DEPARTMENT OF WATER AND POWER
WATER SYSTEM — CITY OF LOS ANGELES

	NAME	DATE	APPROVED
DESIGNED	S.N.B.	8-27-46	[illegible] 1-8-73
DRAWN	F.S.M.	8-27-46	[illegible] 1-10-73
CHECKED	S.N.B.	8-27-46	

776MS

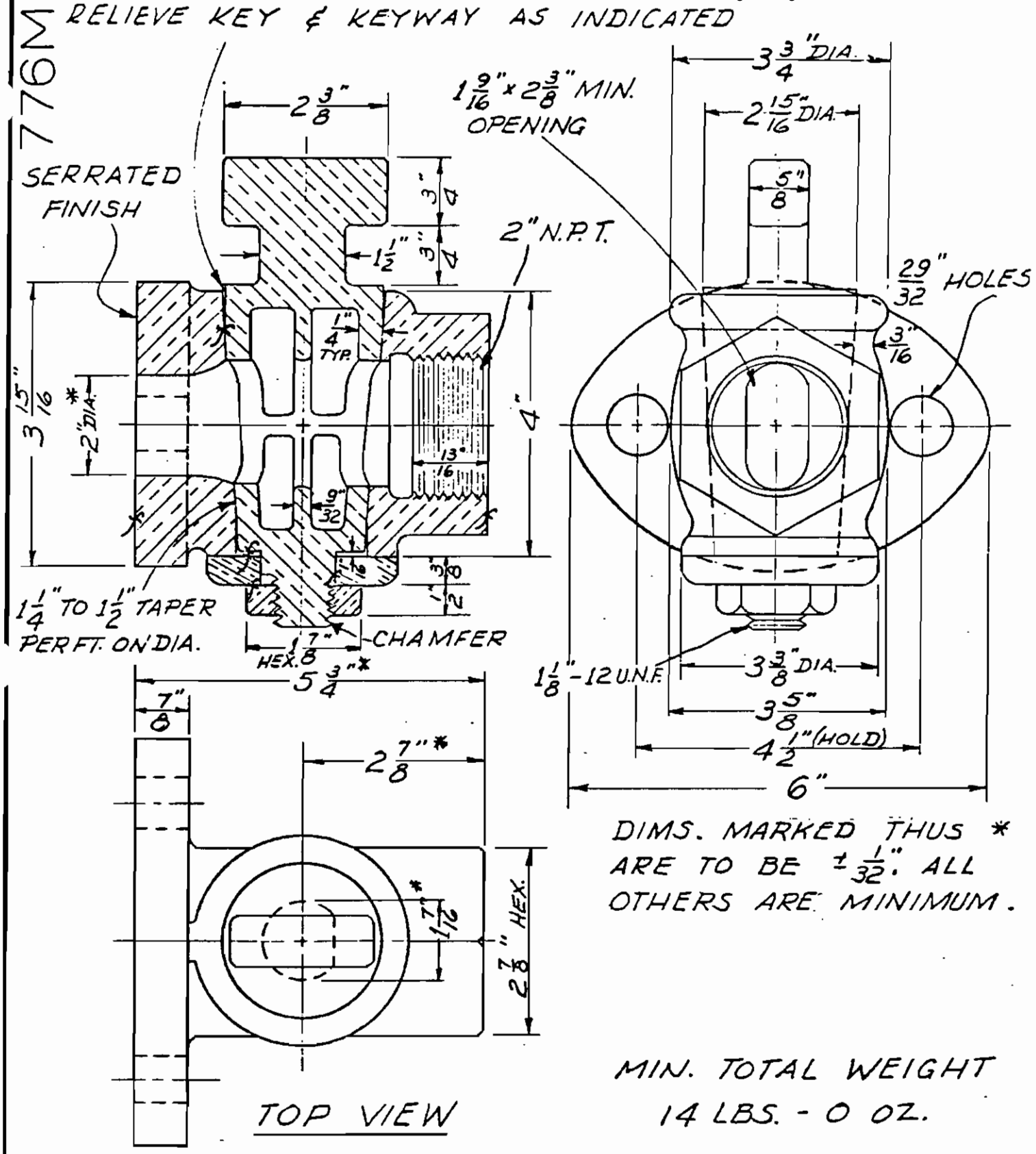

DIMS. MARKED THUS * ARE TO BE ± 1/32". ALL OTHERS ARE MINIMUM.

MIN. TOTAL WEIGHT 14 LBS. - 0 OZ.

WORKING TITLE : FLANGED CURB VALVE

NO SCALE

VALVE, CURB, BR., 2" METER FLANGE TO FEMALE N.P.T.

NO.	DATE	INITL'S.	REVISIONS DESCRIPTION	APP'V'D
6	[illegible]	[illegible]	CHANGED LENGTH	A.W.
7	[illegible]	[illegible]	REVISED & REDRAWN	A.W.

DEPARTMENT OF WATER AND POWER
WATER SYSTEM — CITY OF LOS ANGELES

	NAME	DATE	APPROVED
DESIGNED			
DRAWN	A.E.S.		
CHECKED			

AG204

800M

RELIEVE KEY & KEYWAY AS INDICATED

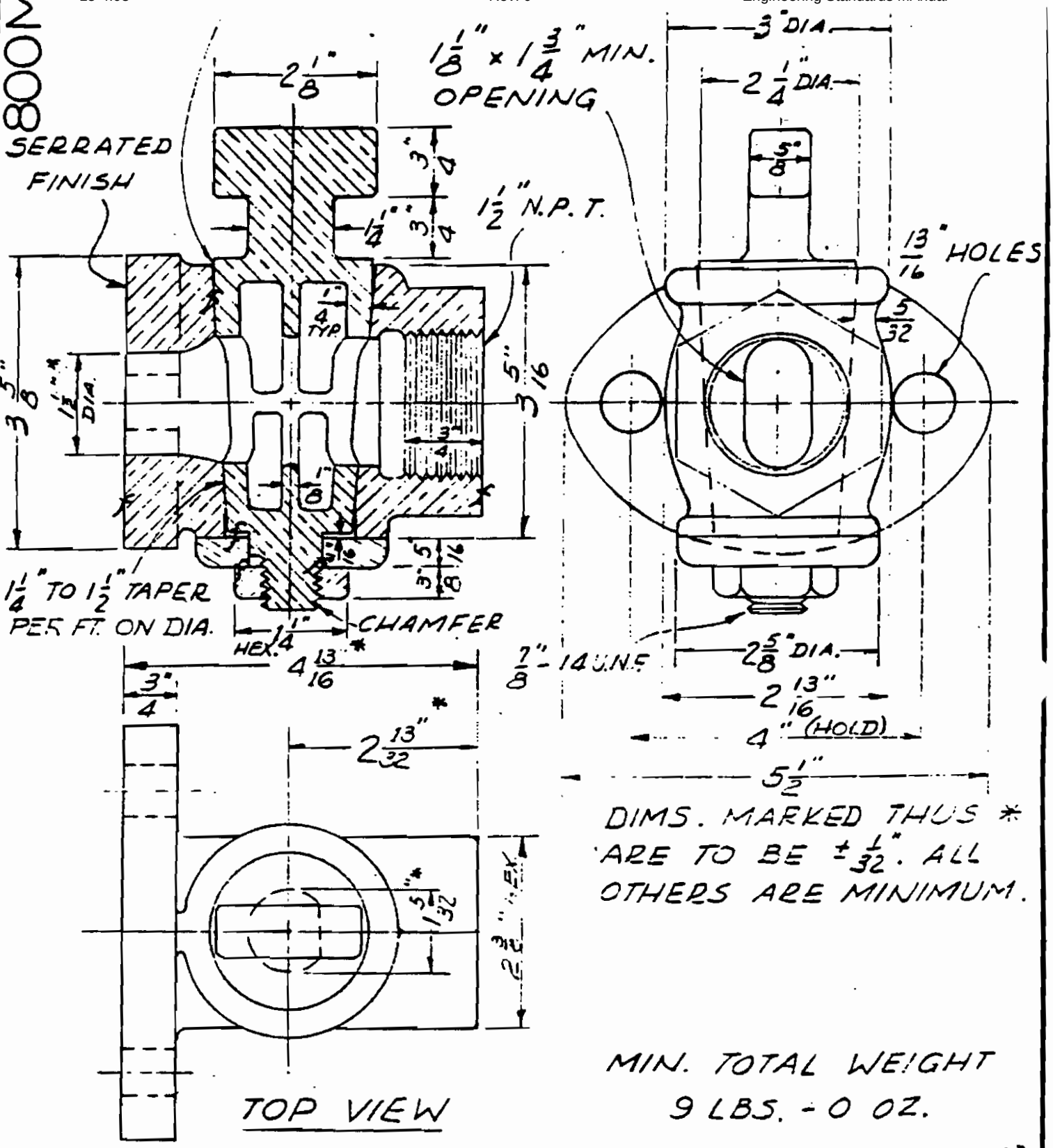

DIMS. MARKED THUS * ARE TO BE $\pm\frac{1}{32}$". ALL OTHERS ARE MINIMUM.

MIN. TOTAL WEIGHT 9 LBS. - 0 OZ.

WORKING TITLE: FLANGED CURB VALVE

NO SCALE

(1)

VALVE, CURB, BR., $1\frac{1}{2}$" METER FLANGE TO FEMALE N.P.T.

NO.	DATE	INIT'LS.	REVISIONS DESCRIPTION	APP'V'D
5	1-57	F.M.	REVISED & RELEASED	[illegible]
	1-60		TITLE CHANGE	

DEPARTMENT OF WATER AND POWER
WATER SYSTEM — CITY OF LOS ANGELES

	NAME	DATE	APPROVED
DESIGNED			[illegible]
DRAWN	F. S. M.	6-57	
CHECKED	A. K. W.	6-57	[illegible]

A-267

877M.S.

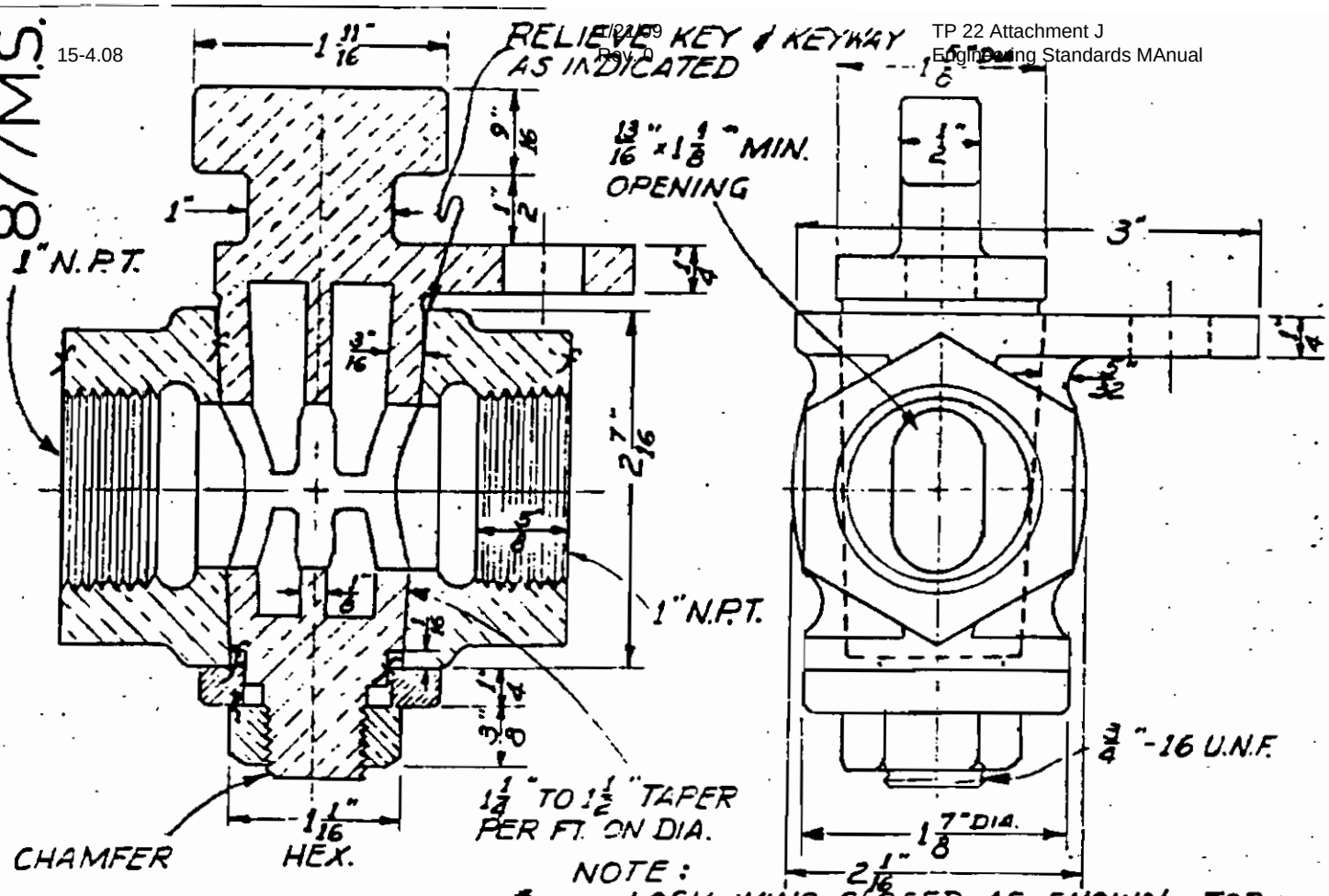

NOTE:
LOCK WING CLOSED AS SHOWN. FOR LOCK WING OPEN ROTATE KEY WING 90°.

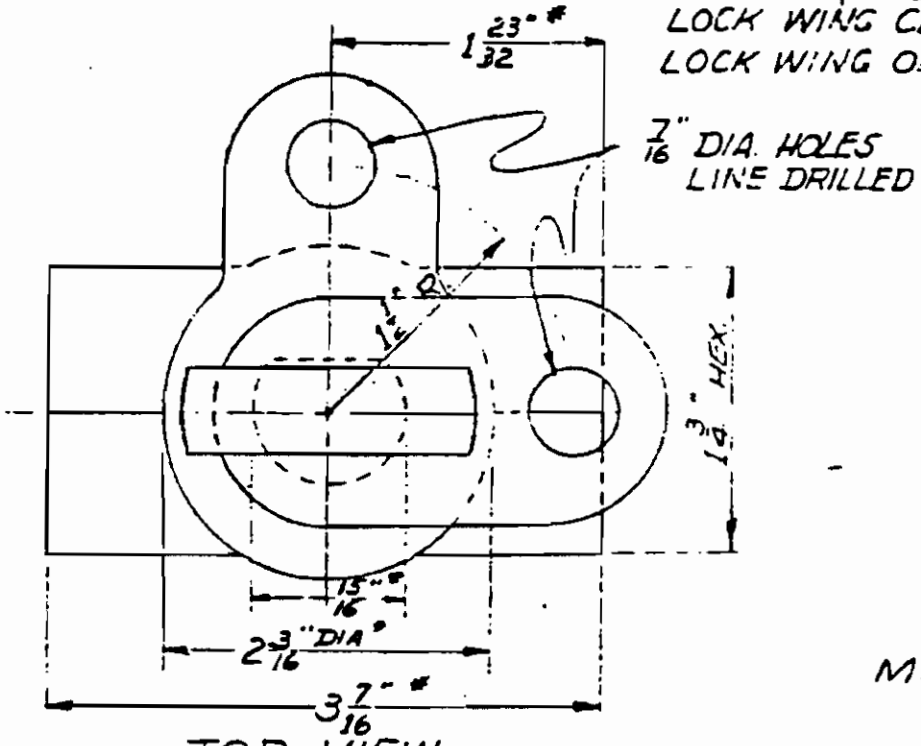

DIMS. MARKED THUS * ARE TO BE ± 1/32. ALL OTHERS ARE MINIMUM.

TOP VIEW

MIN. TOTAL WEIGHT
3 LBS. - 5 OZ.

WORKING TITLE: CURB VALVE

NO SCALE

VALVE, CURB, BR., 1" FEMALE N.P.T. (LOCK WING)

A9287

NO.	DATE	INITIALS	REVISIONS DESCRIPTION	APPV'D
1	5-57	FSM	LOCK WING NOTE ADDED	LFN
2	5-6[illegible]	MEE	REVISED & REDRAWN	ACM
	[illegible]		TITLE CHANGE	

DEPARTMENT OF WATER AND POWER
WATER SYSTEM — CITY OF LOS ANGELES

	NAME	DATE	APPROVED
DESIGNED			R. E. H[illegible]
DRAWN	M E E	5-6[illegible]	[illegible]
CHECKED	F S M	5-[illegible]	

944MS

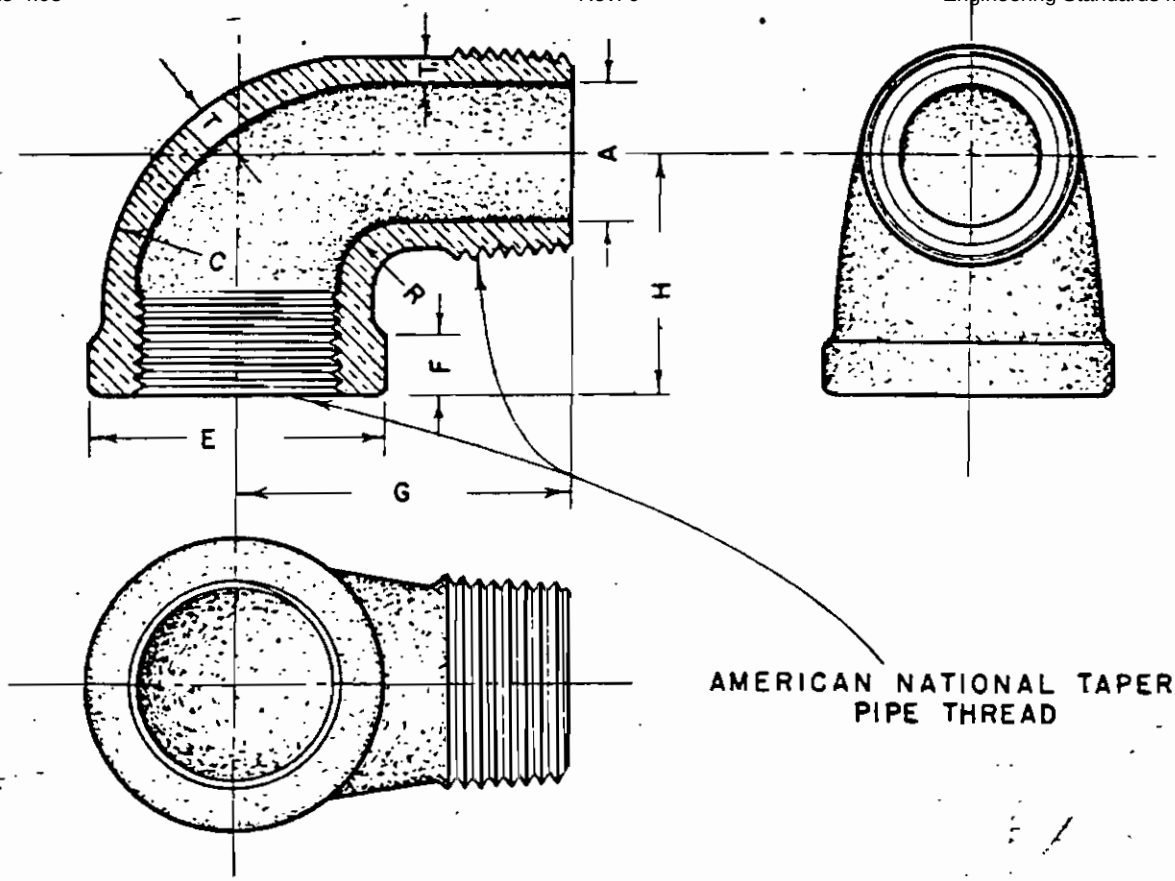

WORKING TITLE: STREET ELBOW BR.

NOMINAL SIZE	A	C	E	F	G	H	R	MIN. T	T_1
$\frac{1}{2}$	$\frac{1}{2}$	$1\frac{1}{4}$	$1\frac{1}{4}$	$\frac{1}{4}$	$1\frac{9}{16}$	$1\frac{1}{4}$	$\frac{1}{2}$	$\frac{3}{16}$	$\frac{3}{16}$
$\frac{3}{4}$	$\frac{3}{4}$	$1\frac{3}{8}$	$1\frac{1}{2}$	$\frac{1}{4}$	$1\frac{5}{8}$	$1\frac{1}{4}$	$\frac{1}{2}$	$\frac{3}{16}$	$\frac{3}{16}$
1	$\frac{7}{8}$	$1\frac{5}{8}$	$1\frac{13}{16}$	$\frac{3}{8}$	2	$1\frac{1}{2}$	$\frac{1}{2}$	$\frac{3}{16}$	$\frac{3}{16}$
$1\frac{1}{2}$	$1\frac{7}{16}$	$2\frac{1}{4}$	$2\frac{1}{2}$	$\frac{7}{8}$	$2\frac{3}{4}$	2	$\frac{5}{8}$	$\frac{3}{16}$	$\frac{3}{16}$
2	$1\frac{7}{8}$	$2\frac{5}{8}$	3	1	$3\frac{3}{16}$	$2\frac{3}{8}$	$\frac{11}{16}$	$\frac{7}{32}$	$\frac{7}{32}$

ALL DIMENSIONS IN INCHES

ELBOWS, STREET BR.

	NAME	DATE	REVISIONS
CALCULATED			2-5-45
TRACED	ERH	7-17-'41	7-10-48
CHECKED			Title Change 1-6-47
APPROVED			

CITY OF LOS ANGELES
DEPARTMENT OF WATER & POWER
BUREAU OF WATER WORKS & SUPPLY
WATER DISTRIBUTION SYSTEM

A 9314

WORKING TITLE CORP. VALVE ER. 1 & 1½

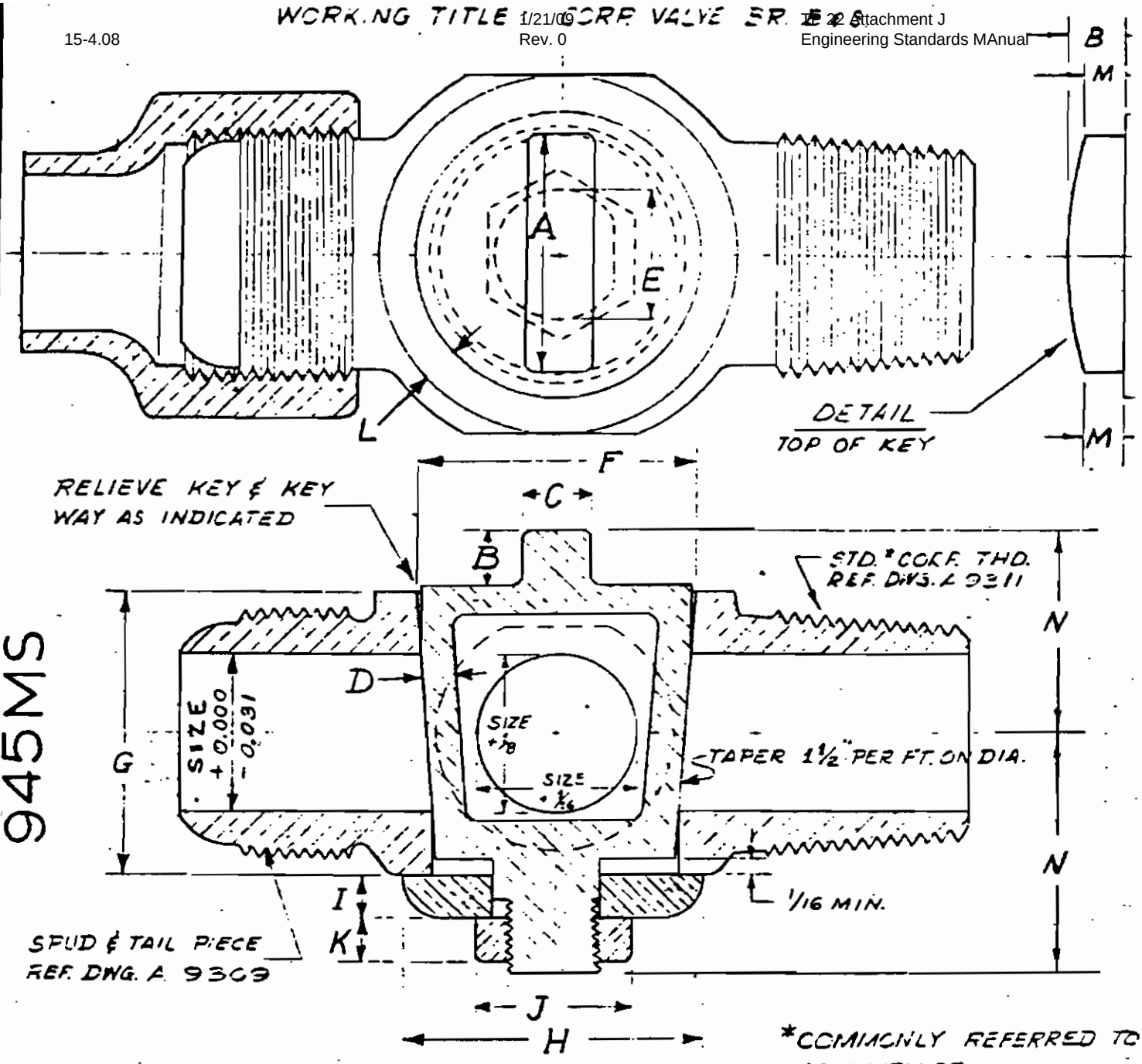

*COMMONLY REFERRED TO AS MUELLER.

945MS

NOTE:
1" VALVE TO FIT IN 2⅞" DIA. CONCENTRIC CIRCLE.
1½" VALVE TO FIT IN 4⅞" DIA. CONCENTRIC CIRCLE.

SIZE	A	B MIN.	C	D MIN.	E	F	G MIN.	H MIN.	I MIN.	J MIN.	K MIN.	L MIN.	M MIN.	N MAX.	THD. N.F.
1	1½	3/8	7/16	7/32	13/16	1 11/16	1 13/16	1 7/8	7/32	15/16	9/32	1/4	1/4	1 7/16	5/8
1½	2 3/8	5/8	5/8	1/4	1½	2 7/8	2 7/8	2 3/4	5/16	1 3/8	3/8	3/8	5/8	2 7/16	7/8

ALL DIMENSIONS IN INCHES

VALVE, CORPORATION BRONZE — 1" & 1½" STANDARD*
CORPORATION THREAD TO COPPER TUBING

A 9315

NO.	DATE	INITIALS	REVISIONS DESCRIPTION	APP'V'D
1	6-55	F.M.	REVISED & REDRAWN	A.W.
2	12-56	F.M.	TAIL PIECE ADDED	A.W.
3	7-59	R.B.	[illegible]	A.W.
4	8-71	R.C.	REV. DIM.'S ON KEY	HOE

DEPARTMENT OF WATER AND POWER
WATER SYSTEM — CITY OF LOS ANGELES

	NAME	DATE	APPROVED
DESIGNED	A.K.W.	6-55	[illegible]
DRAWN	M.E.B.	7-59	[illegible]
CHECKED	F.S.M.	6-55	

972 MS

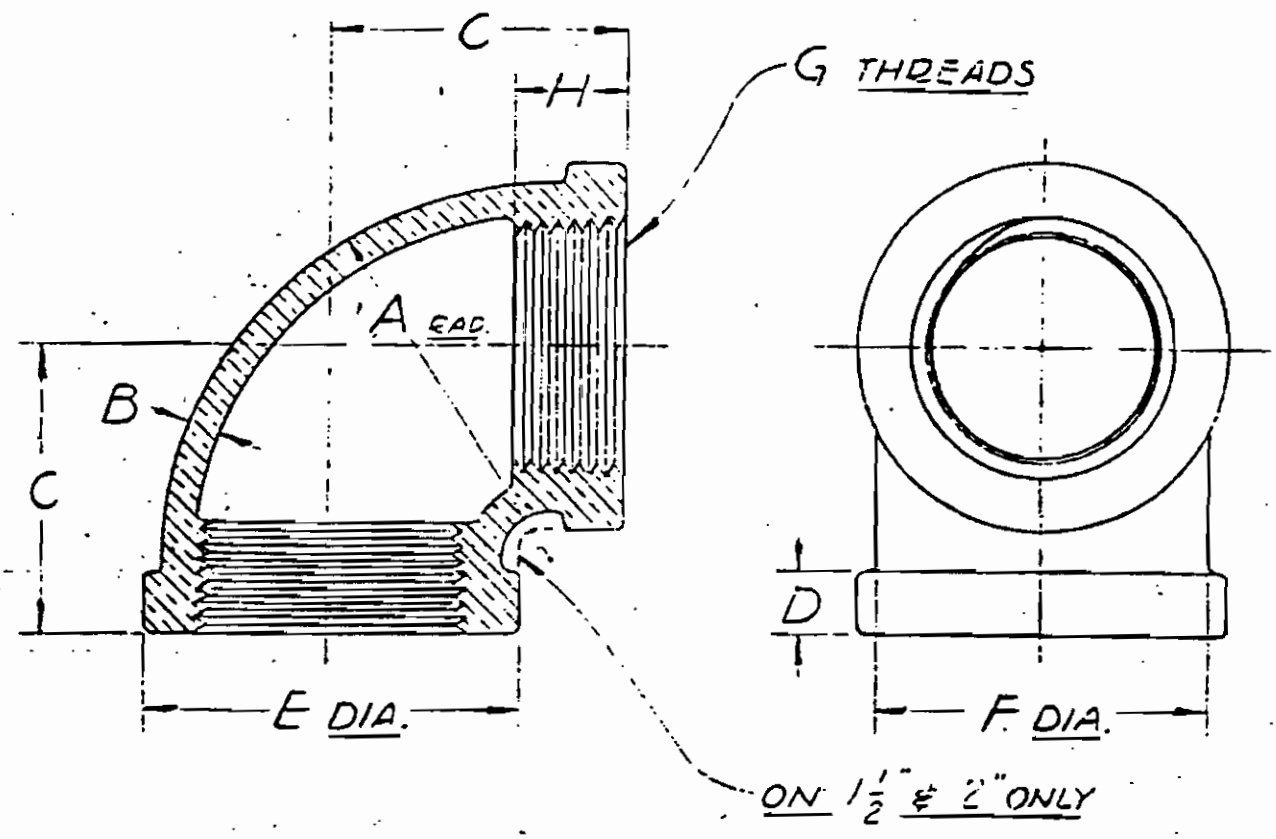

NOTE: BOTH ENDS IDENTICAL

SIZE	A	B	C	D	E	F	G	H
½"	1 5/16	7/64	1 1/8	7/32	1 3/16	1 3/32	½"-14 N.P.T.	9/16
¾"	1 7/16	9/64	1 3/32	1/4	1 7/16	1 11/32	¾"-14 N.P.T.	9/16
1"	1 7/8	5/32	1 9/16	5/16	1 13/16	1 5/8	1"-11½ N.P.T.	11/16
1½"	2 7/16	3/16	1 13/16	3/4	2 7/16	2 5/16	1½"-11½ N.P.T.	3/4
2"	2 3/4	7/32	2 1/4	15/16	3	2 29/32	2"-11½ N.P.T.	15/16

DIMENSIONS IN INCHES

NOTE: THIS DRWG SUPERCEDES M.S. DRWGS. 846, 834, 845, 813 & 810

WORKING TITLE: ELL, BR.

NO SCALE

ELBOW-BRONZE, 90°

NO.	DATE	INIT'LS.	REVISIONS DESCRIPTION	APP'V'D
1	11-18-58	F.M.	TITLE CHANGED	S.N.C.

DEPARTMENT OF WATER AND POWER
WATER SYSTEM — CITY OF LOS ANGELES

	NAME	DATE	APPROVED
DESIGNED	S.N.C.	9-3-58	
DRAWN	F.S.M.	9-4-58	
CHECKED		9-4-58	

A-3325

TO BE FURNISHED WITH A9309 TAIL PIECE

1012 MS

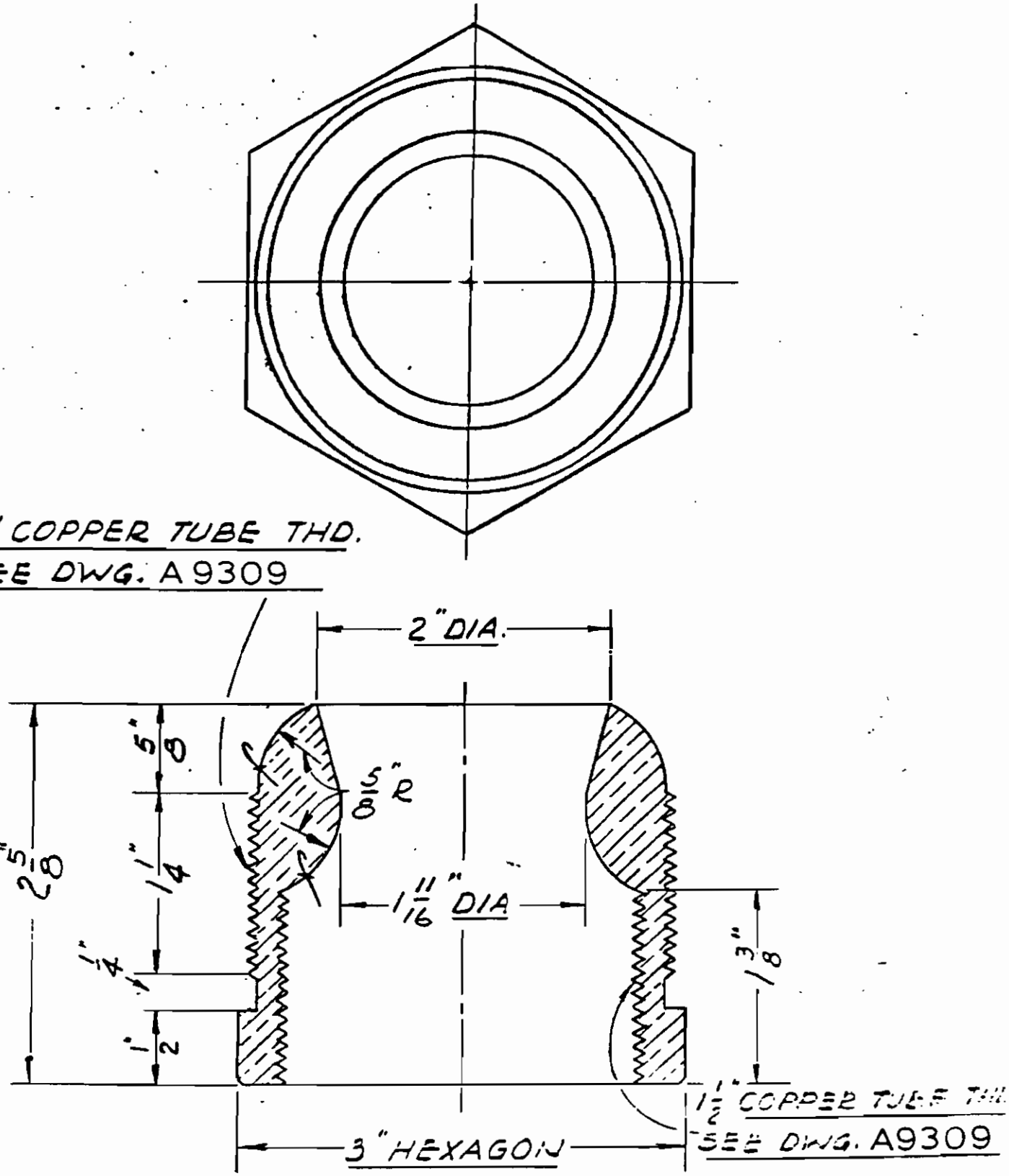

SCALE: FULL SIZE

ADAPTOR, BRASS – 1 1/2" TO 2" COPPER TUBING

A9361

NO.	DATE	INITIALS	REVISIONS DESCRIPTION	APP'V'D
1	[illegible]	[illegible]	5/8" R - WAS 45°	[illegible]
2	[illegible]	[illegible]	TAIL PIECE NOTE ADDED	[illegible]
3	6-5-53	G.S.	2 5/8" WAS 2 1/2" ; 1/4" WAS 1/8" ; 1 3/8" WAS 1 1/4"	G.I.H

DEPARTMENT OF WATER AND POWER
WATER SYSTEM — CITY OF LOS ANGELES

	NAME	DATE	APPROVED
DESIGNED	A.K.W.	6-5-53	[illegible]
DRAWN	J.A.S.	6-5-53	[illegible]
CHECKED	A.K.W.-E.S.M.	6-5-53	

SPECIFICATIONS FOR

BRONZE SERVICE CLAMPS FOR ASBESTOS-CEMENT OR CAST-IRON WATER PIPE

1. General: The bronze service clamps shall be designed for use on asbestos-cement or cast iron pipe and shall fit the diameters and have the number of straps corresponding to the nominal pipe sizes as follows:

Nominal Pipe Sizes (Inches)	Outside Diameters (Inches) Minimum	Maximum	Number of Straps
4	5.00	5.33	1
6	7.10	7.36	1
8	9.30	9.68	1
12	13.50	14.18	2

The pipe diameter range of the clamp shall be marked on its saddle.

2. Operating Requirements: Each bronze service clamp shall produce a watertight seal under 200 psi hydrostatic pressure with the strap nuts tightened to 10 foot-pounds.

Each bronze service clamp shell not leak nor damage the pipe when 6,000 inch-pounds bending moment for a one-inch outlet or 8,000 inch-pounds bending moment for a 1-1/2-inch outlet is applied to the clamp transversely or longitudinally through the outlet and when under 200 psi hydrostatic pressure with the strap nuts tightened to 50 foot-pounds.

3. Saddle: The saddle shall have a shape and flexibility to permit the ears to close firmly against the pipe when the strap nuts are tightened to 20 foot-pounds. The saddle shall extend not less than 150 degrees around the outside diameter of the pipe.

The outlet shall be tapped Mueller Corporation thread in accordance with Drawing A9311.

The ears shall have oval holes for the straps and shall have full bearing surfaces for the nuts. On one side of the saddle the strap holes may have open slots, using washers or washer-type nuts to provide a full bearing surface.

4. Straps and Nuts: The straps shall be formed from 5/8-inch diameter rod and shall match the pipe contour and

provide not less than 3/4-inch bearing width over the length of the strap in contact with the pipe.

The strap ends shall have National Coarse, Class 2 threads. The starting thread shall have a 1/16-inch, 45-degree chamfer. When the strap nuts have been tightened to 50 foot-pounds, there shall be not less than 1/2 inch of thread remaining for tightening when installed on minimum OD pipe; and there shall be not less than 1/2 inch of thread projecting through the nut when installed on maximum OD pipe.

All nuts shall be hexagon, ANSI heavy. Washers or washer-type nuts shall be furnished for use on strap holes having open slots.

5. Material: The materials of the various parts of the service clamps shall meet the following requirements:

a. Saddle: The saddle shall be of bronze meeting the requirements of ASTM B 62, Copper Alloy No. 836, as last revised.

b. Straps: The straps shall be of copper-silicon alloy meeting the requirements of ASTM B 98, Copper Alloy No. 651, B-12, as last revised.

c. Nuts and Washers: The nuts and washers shall meet the requirements of ASTM B 62 or ASTM B 98, as last revised.

d. Gaskets: The gaskets shall be rubber, Buna-N, or neoprene.

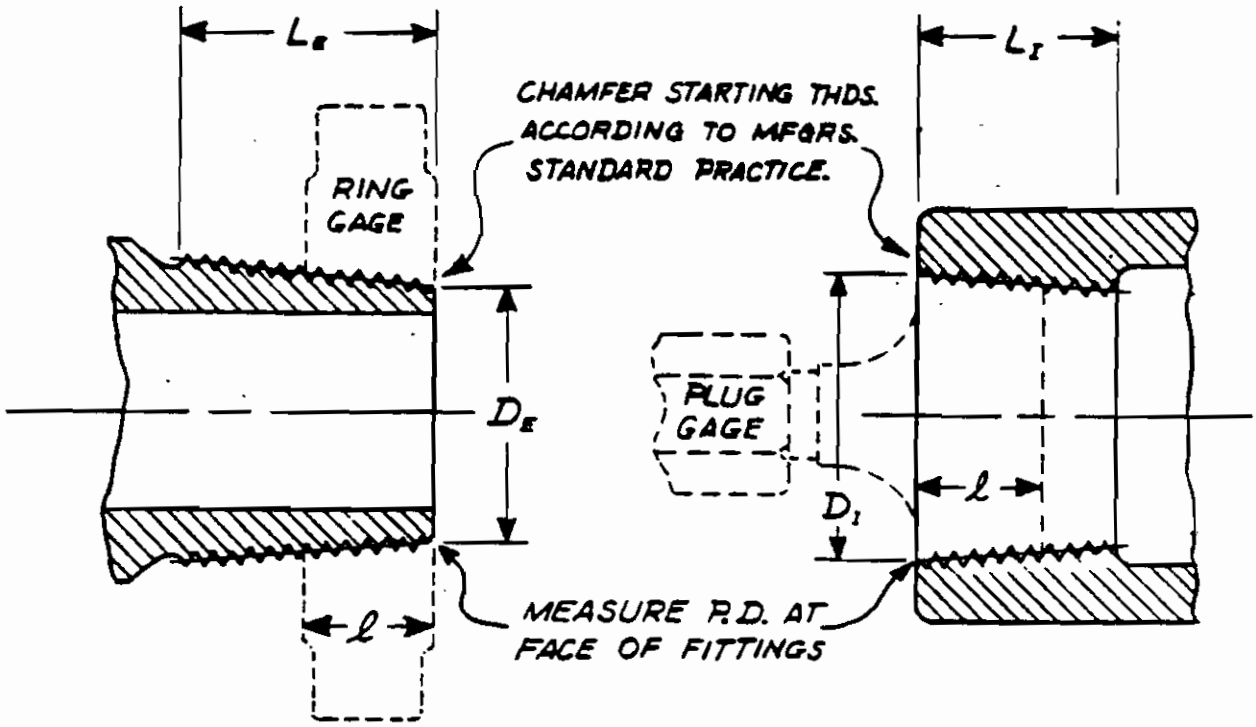

TOLERANCE: RING OR PLUG GAGE FACE SHALL BE WITHIN ONE TURN ± OF BEING FLUSH WITH FACE OF FITTING.

				EXTERNAL THREADS		INTERNAL THREADS	
NOMINAL SIZE	THREADS PER IN.	TAPER PER FT.	ℓ NORMAL ENGAGEMENT BY HAND	D_E PITCH DIA. AT SMALL END	L_E LENGTH MIN.	D_I PITCH DIA. AT LARGE END	L_I LENGTH MIN.
3/4	14	1 3/4	.755	1.047	1 1/8	1.157	7/8
1	12	1 3/4	.835	1.265	1 3/16	1.387	15/16
1 1/4	11 1/2	1	.864	1.658	1 3/8	1.730	1
1 1/2	11 1/2	1	.864	1.934	1 1/2	2.006	1
2	11 1/2	1	.994	2.507	1 17/32	2.590	1 1/8

* COMMONLY REFERRED TO AS MUELLER

STANDARD* CORPORATION THREADS

REVISIONS				
	DATE	INITL'S.	DESCRIPTION	APP'D
2	6-57	F.M.	REVISED & REDRAWN	A.W.
3	7-59	M.B.	REVISED & REDRAWN	A.W.
4	6-74	RC	REVISED ℓ & D_I DIMS.	HOE

DEPARTMENT OF WATER AND POWER
WATER SYSTEM — CITY OF LOS ANGELES

	NAME	DATE	APPROVED
DESIGNED	A.K.W.	5-59	R.E. Hemgong
DRAWN	M.E.B.	5-59	
CHECKED	F.S.M.	5-59	Samuel K. Nelson

0
A 9311

SPECIFICATIONS FOR

MAGNESIUM ANODES

PACKAGED WITH BACKFILL

1. General: The anodes shall be Dow Chemical Company Galvomag magnesium anodes, shall weigh approximately 32 pounds each, and shall have 10-foot long, TW-insulated No. 12 AWG solid copper lead wires. The lead wires shall be silver soldered to the cores of the anodes and shall have the soldered connection sealed with a coal-tar enamel compound.

The anodes shall be made from a magnesium alloy containing manganese and the following amounts of metals and impurities:

Aluminum, maximum, percent.....0.01

Copper, maximum, percent.....0.02

Iron, maximum, percent.....0.30

Manganese, percent.....0.50 to 1.30*

Nickel, maximum, percent.....0.001

Other metals and
impurities each, maximum, percent.....0.05

Total amount of other
metals and impurities, maximum, percent..0.30

* Manganese content shall range from 0.50 percent to 1.30 percent as follows: When aluminum is less than 0.005 percent, the minimum manganese content shall be 0.50 percent plus 60 times the percent of aluminum present; when aluminum is 0.005 percent or more, the manganese content shall range between 0.80 percent to 1.30 percent.

2. Packaging: Each anode shall be packaged with backfill in a white cotton bag with the anode centered in the backfill and enclosed in an unused waterproof burlap bag with an inner lining to protect the anode from damage and to exclude moisture until the anode is installed. The total weight of each packaged anode shall be not less than 70 pounds.

The chemical composition of the backfill shall be as follows:

Gypsum.....75 percent

Bentonite.....20 percent

Sodium Sulphate.....5 percent

Department of Water and Power
of The City of Los Angeles

SPECIFICATIONS FOR
1-INCH AND 1-1/2-INCH STEEL WELDING COUPLINGS

Couplings, steel, welding, "mueller" thread. 1-inch and 1-1/2-inch.

In accordance with DWP Drawings A9364 and A9365, respectively.

1016 MS

TAP 1" STANDARD* CORPORATION THREAD
12 THREADS PER INCH — 1¾" TAPER PER FT.

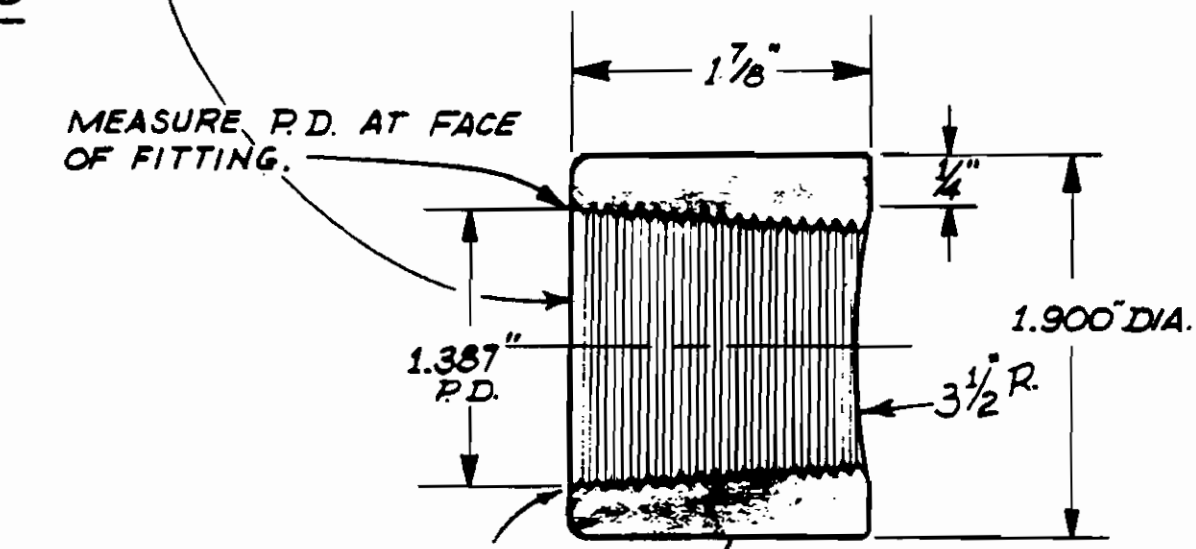

CHAMFER STARTING THREADS ACCORDING TO MFGRS. STD. PRACTICE.

1½" BLACK STEEL PIPE
DOUBLE EXTRA HEAVY.

GAGE TOLERANCE: PLUG GAGE TO FIT WITHIN ONE TURN PLUS OF FLUSH.

* COMMONLY REFERRED TO AS MUELLER

SCALE : FULL

1" WELDING COUPLING — STANDARD* CORPORATION THREAD

A9364

NO.	DATE	INITL'S.	REVISIONS DESCRIPTION	APP'V'D
1	4-58	F.M.	CHAMFER WAS COUNTERBORE	A.W.
2	7-59	M.B.	REVISED & REDRAWN	A.W.
3	6-74	RC	REVISED P.D. & LENGTH	HOE

DEPARTMENT OF WATER AND POWER
WATER SYSTEM — CITY OF LOS ANGELES

	NAME	DATE	APPROVED
DESIGNED	A.K.W.	3-57	R.E. Hamilton
DRAWN	M.E.B.	7-59	Samuel B. Nelson
CHECKED	A.K.W.	3-57	

1017 MS

TAP 1½" STANDARD* CORPORATION THREAD
11½ THREADS PER INCH – 1" TAPER PER FOOT

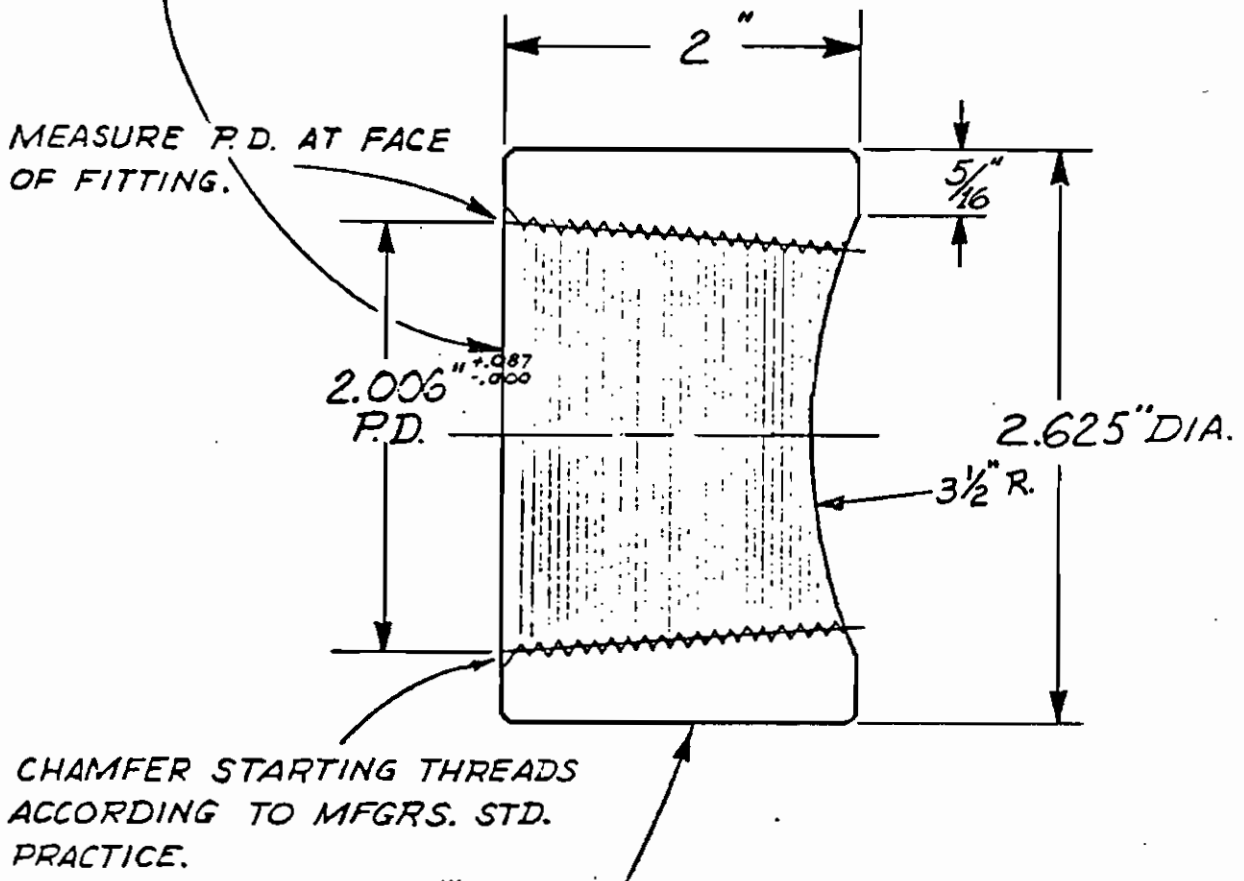

2 5/8" SEAMLESS STEEL MECHANICAL TUBING - .375" WALL THICKNESS.

GAGE TOLERANCE: PLUG GAGE TO FIT WITHIN ONE TURN PLUS OF FLUSH.

* COMMONLY REFERRED TO AS MUELLER.

SCALE: FULL

1½" WELDING COUPLING – STANDARD* CORPORATION THREAD

A93365

NO.	DATE	INITIALS	REVISIONS DESCRIPTION	APPV'D
1				
2				
3				

DEPARTMENT OF WATER AND POWER
WATER SYSTEM — CITY OF LOS ANGELES

DESIGNED		DATE	APPROVED
DRAWN			

Department of Water and Power
of The City of Los Angeles

SPECIFICATIONS FOR
2-INCH CAST IRON COMPANION THREADED FLANGES

Flange, cast-iron, companion, screwed, serrated, flat-faced and drilled to 125-pounds. 2-inch.

Standard finish in accordance with manufacturer's standardization society (MSS). Shall have a minimum depth of 0.005-inch.

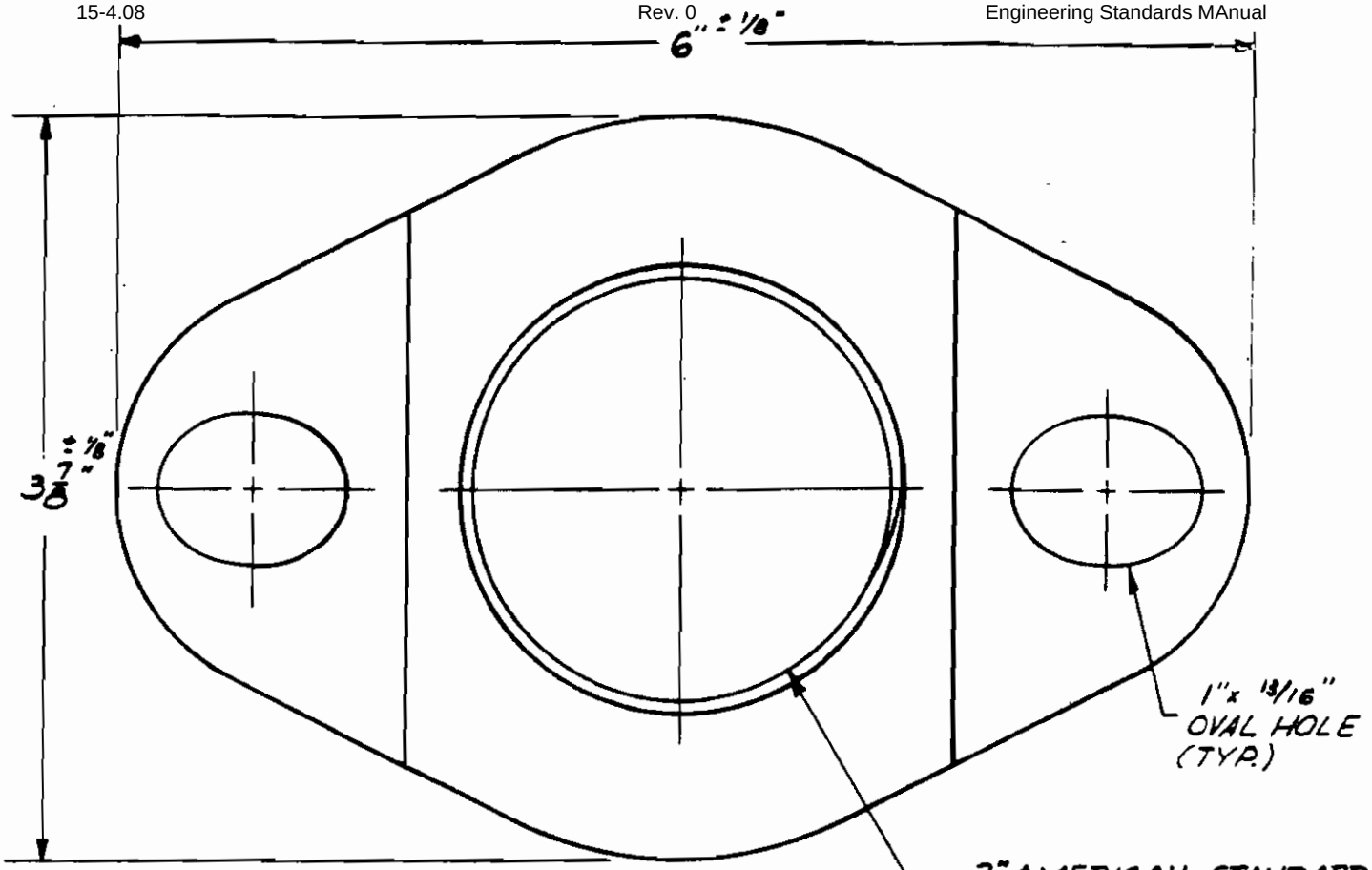

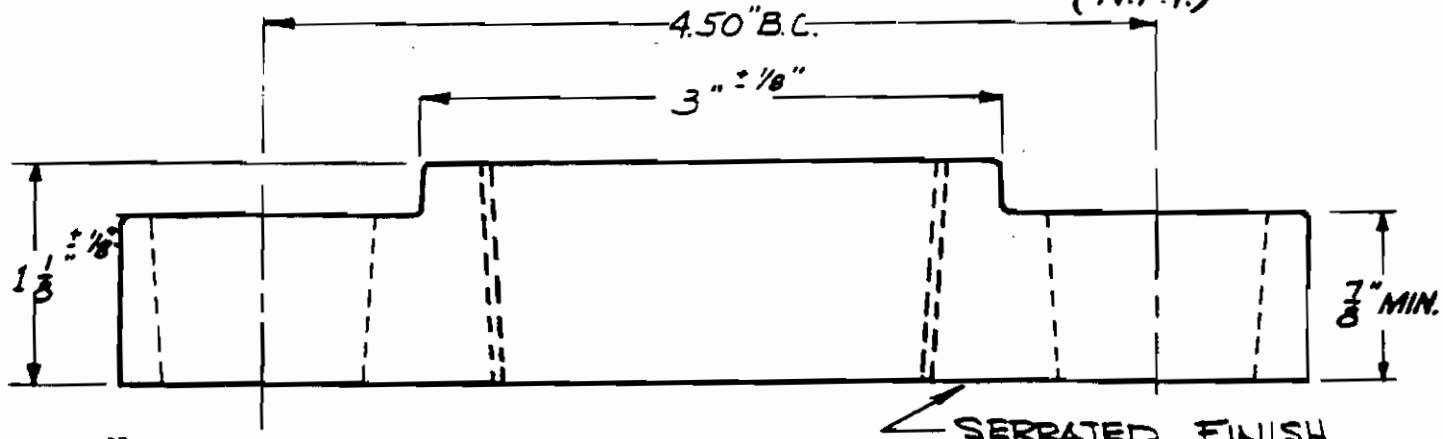

Notes:
1. Serrations shall cover entire face.
2. Serration depth 0.016" $^{+.000}_{-.006}$
3. Pitch of serrations (crest to crest) 0.062" $^{+.005}_{-.010}$
4. Flange to be asphaltum dipped
5. Serrations may be concentric or spiral

MAT'L: CLASS 30 CAST IRON

2" METER COMPANION FLANGE

0

A9-C05

NO.	DATE	BY'L'S.	REVISIONS DESCRIPTION	APP'V'S
1	7-14-67	MEB.	ADDED: SERRATION DETAILS	J.M.A.
2	9-16-71	RFC	ADDED OVAL HOLES & TOLERANCES	J.L.H.
3	5-8-78	GDB	MADE SERRATIONS OPTIONAL	RSD

DEPARTMENT OF WATER AND POWER
WATER SYSTEM — CITY OF LOS ANGELES

	NAME	DATE	APPROVED
DESIGNED			
DRAWN	M.E.B.	9/13/63	
CHECKED	A.K.W.	9/63	

NOV 2 2 56 N A A

	LINESTYLE	PEN
PROPOSED WATER MAIN		3
EXISTING WATER MAIN		1
TO BE ABANDONED WATER MAIN		3
METROPOLITAN WATER DISTRICT (MWD)		1
PROPERTY LINE		2
EASEMENT LINE		2
FORMER PROPERTY LINE	℄	0
STREET CENTERLINE	℄	00
CURB LINE		0
FORMER CURB LINE		00
SANITARY SEWER (S.S.)	SS	0
SOUTHERN CALIFORNIA GAS (SCG) SOUTHERN COUNTIES GAS (SCoG)		0
DWP POWER SYSTEM (DWPPS) SOUTHERN CALIFORNIA EDISON (SCE)		0
PACIFIC TELEPHONE & TELEGRAPH (PTT) WESTERN UNION (WUT)		0
ELECTROLIER LIGHTING CONDUIT (L)	L	0
TRAFFIC SIGNAL CONDUIT (TS) POLICE & FIRE ALARM CONDUIT (FA)	TS	0
OIL OR GASOLINE PIPE LINES (OIL)	OIL	0
STORM DRAIN (SD)		0
MISCELLANEOUS SUBSTRUCTURES (USE APPROPRIATE LABEL)		0
TEMPORARY UTILITIES		0

NOTE: USE DOUBLE LINES TO SHOW LARGE DIAMETER SUBSTRUCTURES WHERE SCALE PERMITS.

LINESTYLE STANDARDS

A9430

REVISIONS				
NO.	DATE	INIT		APP'D

DEPARTMENT OF WATER AND POWER
WATER SYSTEM — CITY OF LOS ANGELES

	NAME	DATE	APPROVED	
DESIGNED	V. TOROMANIAN	9-91	B. WEINSTEIN	JUNE '92
DRAWN	V. TOROMANIAN	9-91		
CHECKED	L. NUNO	2-92		

GATES AND FITTINGS

SIZE OF SYMBOLS

LINE GATE OPEN – SHUT

LINE GATE WITH BYPASS – WITH REDUCERS

SEASONAL OPERATIONAL GATE OPEN – SHUT

SERVICE GATE – BLOW-OFF GATE

AIR VALVE (MANUAL) – AIR RELEASE VALVE (AUTO.)

AIR VACUUM VALVE (AUTO.) – COMB. AIR VALVE (AUTO.)

ROTO, PLUG, GLOBE, CONE, BALL, & SPHERICAL VALVES OPEN – SHUT

BUTTERFLY VALVE – ALTITUDE VALVE

CHECK VALVE – CLAPPER REMOVED

REGULATORS – RELIEF VALVE

PRESSURE RECORDER

OUTLET – PASS HOLE

MAINT. HOLE – AIR VALVE IN MAINT. HOLE (SHOW MAINT. HOLE ON WATER MAIN ONLY)

VENTURI METER – PITOT TUBE

SPARLING, ORIFICE, & FLOW METERS

SLIDE, LIFT OR SLUICE GATE – REDUCER

TEE – CROSS

CLAMP – DOUBLE CLAMP

HORIZONTAL BEND – OFFSET

VERTICAL BENDS – OFFSET

WELDED CONNECTION – WELDED TEE

MECHANICAL COUPLING

MAINS NOT CONNECTED

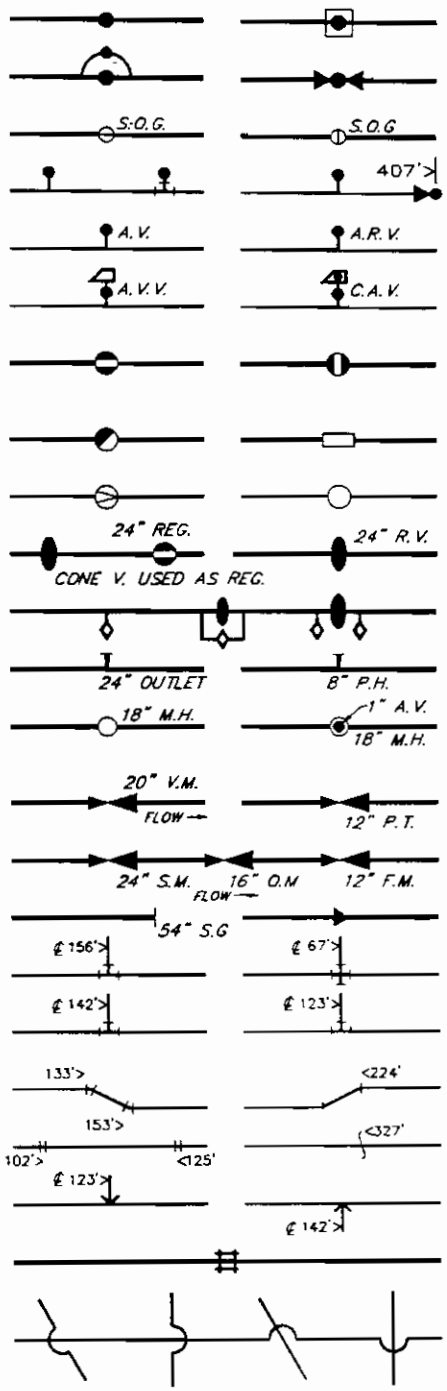

STANDARD DRAFTING SYMBOLS

REVISIONS				
NO.	DATE	INIT.		APP'D

DEPARTMENT OF WATER AND POWER
WATER SYSTEM — CITY OF LOS ANGELES

	NAME	DATE	APPROVED
DESIGNED	L. NUNO	9-91	B. WEINSTEIN JUNE '92
DRAWN	V. TOROMANIAN	9-91	
CHECKED	L. NUNO	9-91	

A9431-1

ESM-2A

SHEET 2A

FIRE HYDRANTS, WATER MAINS, ETC.

2 1/2" SINGLE BUILT-UP FIRE HYDRANT

4" SINGLE BUILT-UP FIRE HYDRANT

2 1/2" SINGLE OUTLET FIRE HYDRANT

4" SINGLE OUTLET FIRE HYDRANT

2 1/2" X 4" DOUBLE OUTLET FIRE HYDRANT

4" X 4" DOUBLE OUTLET FIRE HYDRANT

* DEPT. 2 1/2" SFH OR 2 1/2" ANGLE VALVE

* DEPT. 4" SFH OR 4" ANGLE VALVE

CONCRETE THRUST BLOCK

THIMBLE OR CONCRETE ENCASEMENT

CRADLE – SLAB

CONDUIT – TUNNEL

CATHODIC PROTECTION – INSULATED JOINT

MAXIMUM STATIC PRESSURE

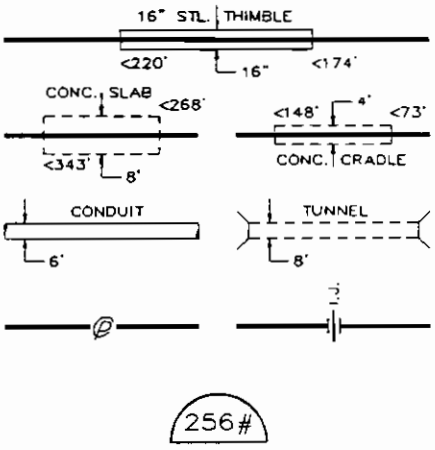

* FOR FIRE PROTECTION OF DEPARTMENT PROPERTY AND OTHER AGENCIES. NOT BILLED TO L.A. FIRE DEPARTMENT.

STANDARD DRAFTING SYMBOLS (CONT'D)

A9431-2

REVISIONS				
NO	DATE	INIT		APP'D

DEPARTMENT OF WATER AND POWER
WATER SYSTEM — CITY OF LOS ANGELES

	NAME	DATE	APPROVED
DESIGNED	L. NUNO	9-91	B. WEINSTEIN JUNE '92
DRAWN	V. TOROMANIAN	9-91	
CHECKED	L. NUNO	9-91	

6" PIPE & FITTINGS

6" D.I. R.G. FLG./BELL ADAPTOR

6" STL. ANCHOR BOX ASS'Y

6" X 11-1/4° D.I. R.G. BEND AWWA (B-B)

6" X 22-1/2° D.I. R. G. BEND AWWA (B-B)

6" X 45° D.I. R.G. BEND AWWA (B-B)

6" X 90° D.I. R.G. BEND AWWA (B-B)

6-5/8" I.D. X 5/16" X 6" STL. BUTTSTRAP

6" STL. WELD CAP

6" CAST TRANS. MECHANICAL COUPLING

6" STL. MECHANICAL COUPLING (NON-INS.)

6" X 6" D.I. R.G. CROSS AWWA

6" X 4" D.I. R.G. CROSS AWWA

6" X 6" STL. WELD CROSS

6" X 15° STL. WELD ELBOW

6" X 30° STL. WELD ELBOW

6" X 45° STL. WELD ELBOW

6" X 90° STL. WELD ELBOW

6" X 150# STL. BLIND FLANGE

6" X 300# STL. BLIND FLANGE

6" X 150# STL. WELD NECK FLANGE

6" X 300# STL. WELD NECK FLANGE

6" PRE-ASS'D INS. JOINT TYPE II-D

6" PRE-ASS'D INS. JOINT TYPE I-E
(STL. SPIGOT / AWWA R.G. BELL)

6" X 0.31" X 18" LONG D.I. R.G. NIPPLE AWWA

6" X 0.31" D.I. R.G. PIPE AWWA

6-5/8" O.D. X 1/4" EN. UC., C.L. & C.,
S.J., WELDED STL PIPE

6" X 2" D.I. R.G. TAPPED PLUG AWWA

6" D.I R.G. PLUG AWWA W/1" CORP. COCK

6" X 4" D.I. R.G. REDUCER AWWA

6" X 4" STL. WELD REDUCER

6" X 6" X 175# C.I. FLG. TAPPED SLEEVE

6" X 4" X 175# C.I. FLG. TAPPED SLEEVE

6" X 6" D.I. R.G. TEE AWWA (B-B-B)

6" X 4" D.I. R.G. TEE AWWA (B-B-B)

6" X 6" D.I. R.G. F.H. TEE AWWA (B-B-S)

6" X 6" STL. WELD TEE

6" X 4" STL. WELD TEE

6" X 200# C.I. R.G. GATE VALVE

6" X 250# D.I. R.G. GATE VALVE
(U.S. PIPE "METROSEAL" OR EQUAL)

6" X 200# C.I. FLG. GATE VALVE

6" X 250# C.I. FLG. GATE VALVE

6" X 350# C.I. FLG. GATE VALVE

6" BELL YOKE W/RODS

6" SAFETY YOKE W/RODS

OTHER PIPE & FITTINGS

32# MAGNESIUM ANODE

2" STL. WELD HALF COUPLING

4" X 0.29" D.I. R.G. PIPE AWWA

8" X 0.33" D.I. R.G. PIPE AWWA

12" X 0.37" D.I. R.G. PIPE AWWA

4-1/2" O.D. X 1/4" EN. UC., C.L. & C.,
S.J., WELDED STL. PIPE

8-5/8" O.D. X 1/4" EN. UC., C.L. & C.,
S.J., WELDED STL. PIPE

12-3/4" O.D X 1/4" EN. UC., C.L. & C.,
S.J., WELDED STL. PIPE

2" STOP-COCK & BLOW-OFF ASS'Y

TEST STATION

NOTE. FITTINGS IN OTHER SIZES ARE AVAILABLE.

COMMON PIPE & FITTING TERMS

A9432

REVISIONS				
NO.	DATE	INIT		APP'D

DEPARTMENT OF WATER AND POWER
WATER SYSTEM — CITY OF LOS ANGELES

	NAME	DATE	APPROVED	
DESIGNED	L. NUNO	9-91	B. WEINSTEIN	JUNE '92
DRAWN	V. TOROMANIAN	9-91		
CHECKED	L. NUNO	9-91		

A.C.	– ASBESTOS CEMENT
A.R.V.	– AIR RELEASE VALVE
ASS'Y	– ASSEMBLY
A.V.	– AIR VALVE
A.V.V.	– AIR VACUUM VALVE
AWWA	– AMERICAN WATER WORKS ASSOCIATION
B–B–B	– BELL–BELL–BELL
B–B–S	– BELL–BELL–SPIGOT
C.A.V	– COMBINATION AIR VALVE
C.I.	– CAST IRON
C.L. & C.	– CEMENT LINED & COATED
D.F.H.	– DOUBLE–OUTLET FIRE HYDRANT
D I	– DUCTILE IRON
EN. UC.	– ENAMEL UNDERCOATED
F&B	– FLANGE & BELL
F.L.	– FLOW LINE
FLG.	– FLANGE
G.V.	– GATE VALVE
I D.	– INSIDE DIAMETER
I J	– INSULATING JOINT
INS.	– INSULATING
LB, #	– POUND
L.R.	– LONG RADIUS
MC	– MECHANICAL COUPLING
MECH.	– MECHANICAL
MH	– MAINTENANCE HOLE
M.J.	– MECHANICAL JOINT
N.P.T.	– NATIONAL PIPE THREAD
NTS	– NOT TO SCALE
O.D.	– OUTSIDE DIAMETER
PSF	– POUNDS PER SQUARE FOOT
PSI	– POUNDS PER SQUARE INCH
R.G.	– RUBBER GASKET
S.B.U.F.H.	– SINGLE–OUTLET BUILT–UP FIRE HYDRANT
S.C. & B.O.	– STOP–COCK & BLOW–OFF
S.D.	– STORM DRAIN
S.J	– SLIP JOINT
S.R.	– SHORT RADIUS
S.S.	– SANITARY SEWER
STL	– STEEL

COMMON MAIN EXTENSION PLAN ABBREVIATIONS

A9433

REVISIONS				
NO.	DATE	INIT		APP'D

DEPARTMENT OF WATER AND POWER
WATER SYSTEM — CITY OF LOS ANGELES

	NAME	DATE	APPROVED	
DESIGNED	L. NUNO	9–91	B. WEINSTEIN BW	JUNE '92
DRAWN	V. TOROMANIAN	9–91		
CHECKED	L. NUNO	9–91		

ESM–4

CONDITION	DUCTILE IRON PIPE (UP TO 200 PSI)	WELDED STEEL PIPE (ABOVE 200 PSI)
NO UNUSUAL CONDITIONS	●	
CORROSIVE SOILS	●	
HILLSIDE AREAS	●	●
HIGH PRESSURE AREAS		● ①
FILL OR UNCONSOLIDATED ALLUVIUM	● ②	●
SHALLOW OR VERY DEEP PIPE COVER		●
RIGHT-OF-WAY, EASEMENT	● ③	●
OFFSETS OVER OR UNDER SUBSTRUCTURES	● ④	●
BRIDGE CROSSINGS		● ⑤
OPEN DITCH (CLEAR SPAN) CROSSINGS		●
RAILROAD CROSSINGS		● ⑥
ADJACENT TO MAJOR MERCANTILE AREAS	●	●
MAJOR THOROUGHFARES	●	●
CUT-FILL TRANSITION AREAS	●	●
CHANNEL CROSSINGS	● ⑦	●

① PRESSURE OVER 250 PSI REQUIRES ENGINEERING ANALYSIS OF PIPE WALL AND FLANGE THICKNESS.

② IF NO LATERAL MOVEMENT IS ANTICIPATED.

③ IF IN STREET CONFORMING TO CITY ENGINEER'S STANDARDS

④ IF SUFFICIENT PIPE COVER EXISTS AND OFFSET CAN BE MADE WITH STANDARD D.I. PIPE BENDS.

⑤ ENCASE AND GROUT PIPE ADJACENT TO ABUTMENT.

⑥ ENCASE AND GROUT PIPE.

⑦ USE LOCKING GASKETS.

SUGGESTED USE OF PIPE MATERIAL

A9434

REVISIONS

NO.	DATE	INIT		APP'D

DEPARTMENT OF WATER AND POWER
WATER SYSTEM — CITY OF LOS ANGELES

	NAME	DATE	APPROVED
DESIGNED	V. TOROMANIAN	12-91	B WEINSTEIN BW JUNE '92
DRAWN	V. TOROMANIAN	12-91	
CHECKED	L. NUNO	12-91	

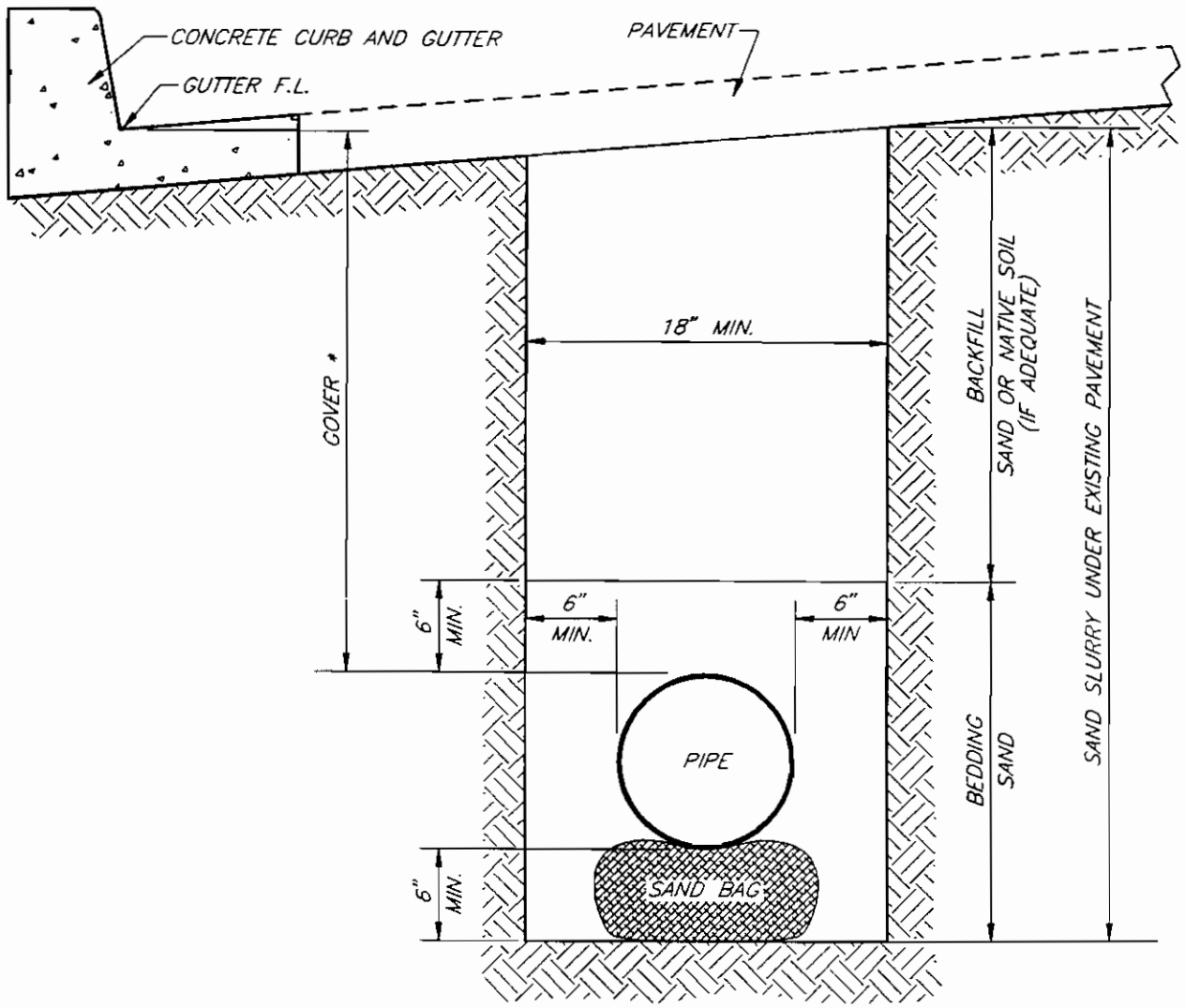

* – 48" MAX. / 36" MIN. FOR 12" DIA. AND LARGER PIPE
42" MAX. / 30" MIN. FOR 8" DIA. AND SMALLER PIPE

TYPICAL TRENCH SECTION

REVISIONS				
NO	DATE	INIT		APP'D

DEPARTMENT OF WATER AND POWER
WATER SYSTEM — CITY OF LOS ANGELES

	NAME	DATE	APPROVED
DESIGNED	L. NUNO	1-90	B. WEINSTEIN JUNE '92
DRAWN	V. TOROMANIAN	3-92	
CHECKED	L. NUNO	3-92	

A9435

ESM-6

SHEET 6

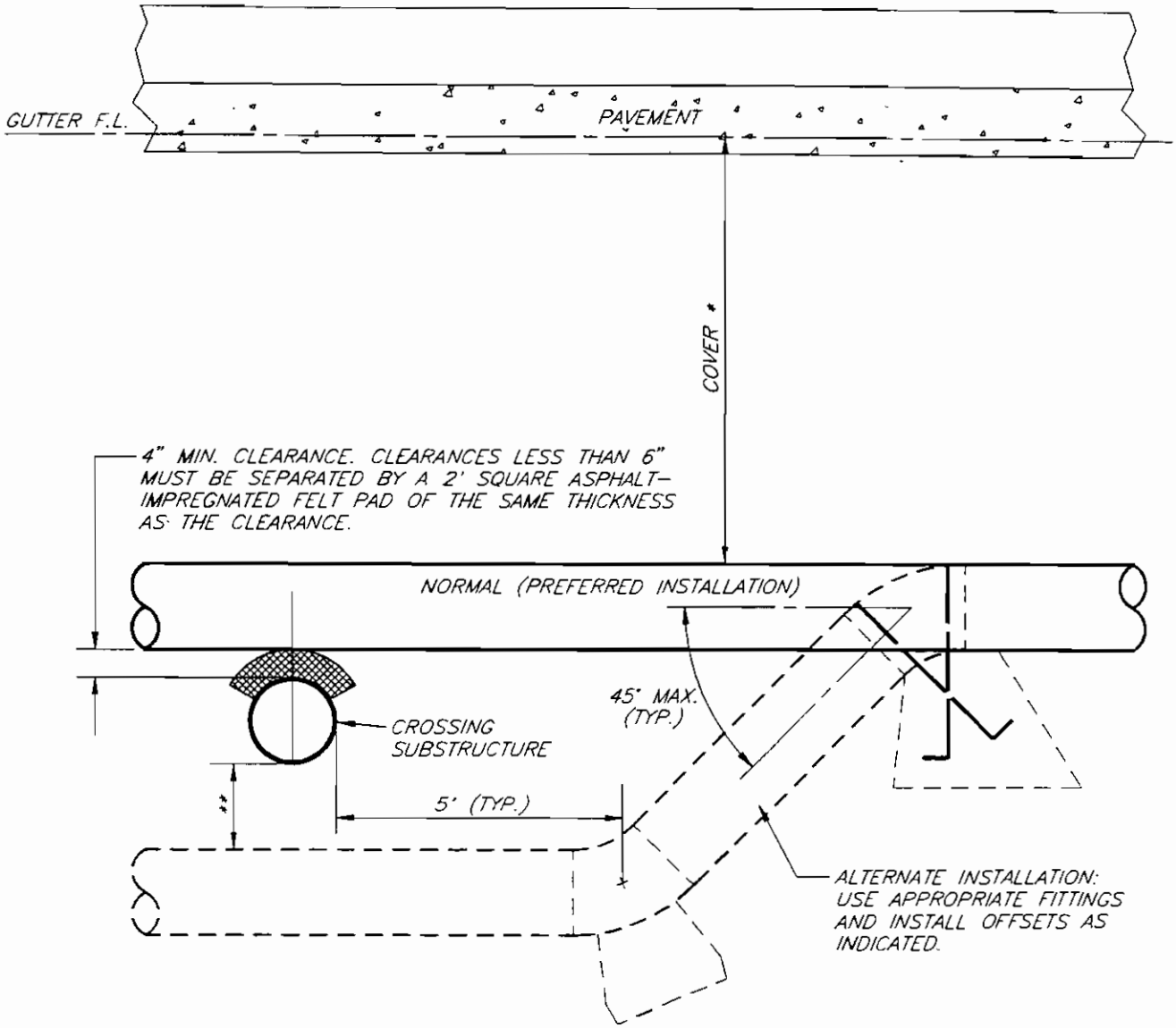

* – 48" MAX. / 36" MIN. FOR 12" DIA. AND LARGER PIPE
42" MAX. / 30" MIN. FOR 8" DIA. AND SMALLER PIPE

** – 6" MIN. CLEARANCE FOR 12" DIA. AND SMALLER DWPWS PIPE
12" MIN. CLEARANCE FOR LARGER THAN 12" DIA DWPWS PIPE

NOTE:

THE MINIMUM CLEARANCES FOR UNDERCROSSING SHOWN HEREON SUPERCEDE THE MINIMUM OF 4" SHOWN IN STANDARD DRAWING A9438.
SEE STANDARD DRAWING A9438 FOR SPECIFICS OF SEWER CROSSING

TYPICAL SUBSTRUCTURE CROSSING DETAIL

A9436

REVISIONS				
NO	DATE	INIT		APP'D

DEPARTMENT OF WATER AND POWER
WATER SYSTEM — CITY OF LOS ANGELES

	NAME	DATE	APPROVED	
DESIGNED	L. NUNO	1-90	B. WEINSTEIN	JULY '92
DRAWN	V. TOROMANIAN	3-92		
CHECKED	L. NUNO	3-92		

FIGURE 1 — PARALLEL CONSTRUCTION

Note: Zones identical on either side of center lines.
Zone "P" is a prohibited zone, Section 64630(e)(2)
California Administrative Code, Title 22.

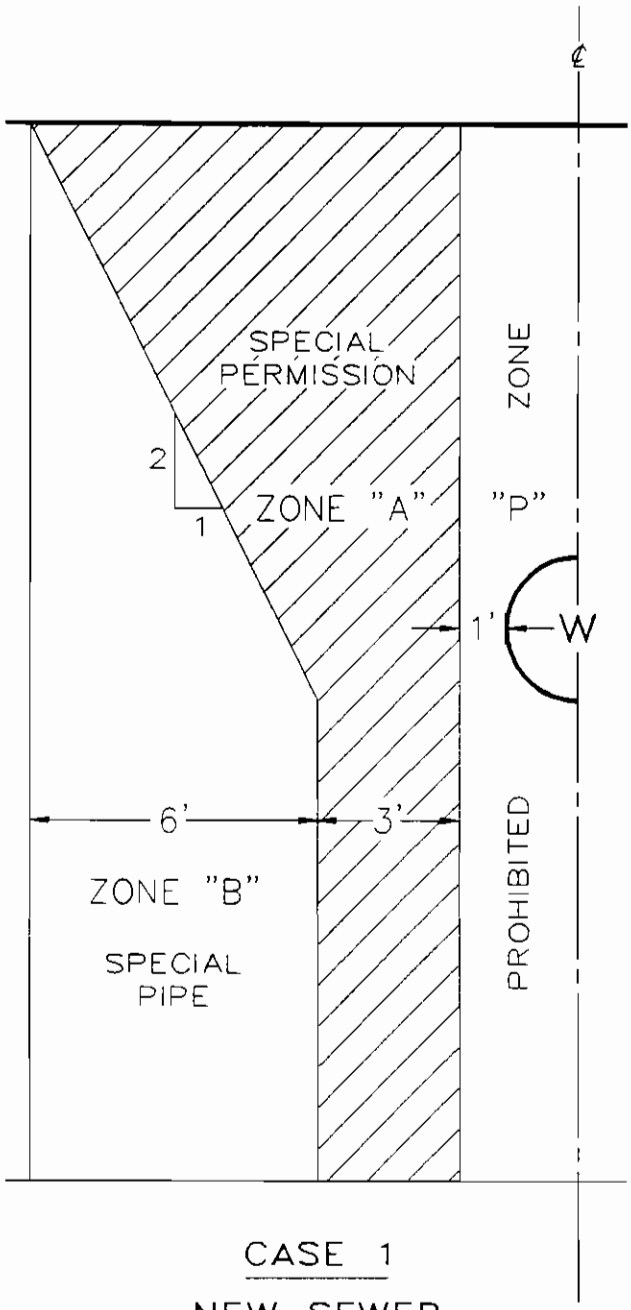

CASE 1

NEW SEWER

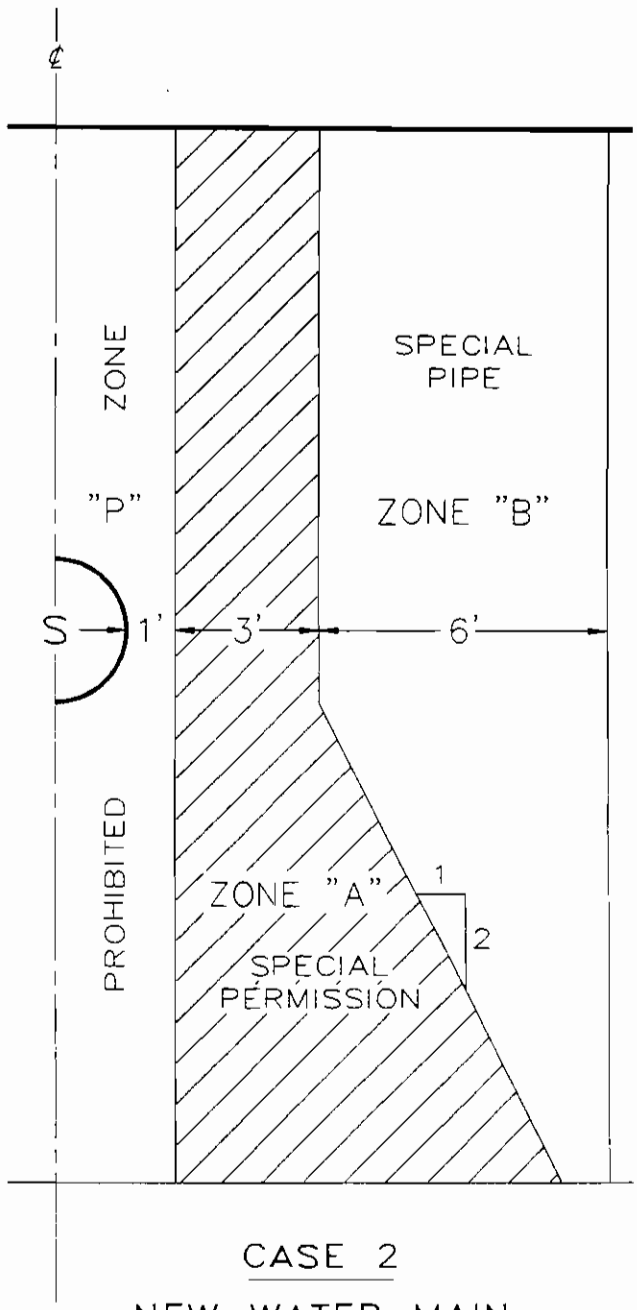

CASE 2

NEW WATER MAIN

SEWER AND WATER MAIN PARALLEL SEPARATION

(PER STATE OF CALIFORNIA, HUMAN AND WELFARE AGENCY, DEPARTMENT OF HEALTH SERVICES)

A9437

REVISIONS				
NO.	DATE	INIT		APP'D

DEPARTMENT OF WATER AND POWER
WATER SYSTEM — CITY OF LOS ANGELES

	NAME	DATE	APPROVED	
DESIGNED	V TOROMANIAN	9-91	B WEINSTEIN	JUNE '92
DRAWN	V. TOROMANIAN	9-91		
CHECKED	L NUNO	9-91		

FIGURE 2 – CROSSINGS

Note: Zone "P" is a prohibited construction zone.

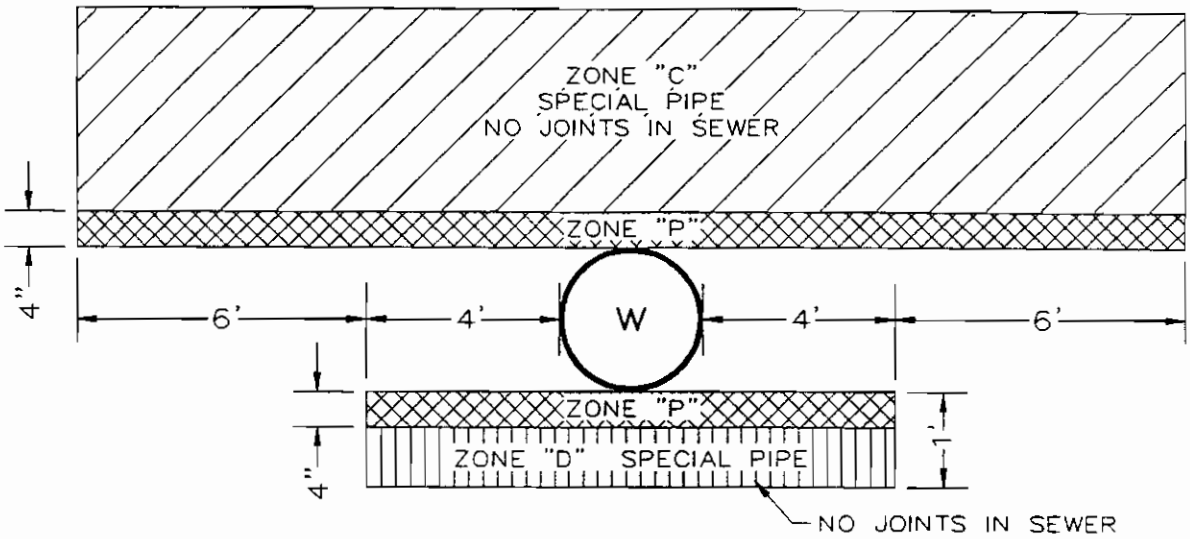

CASE 1

NEW SEWER

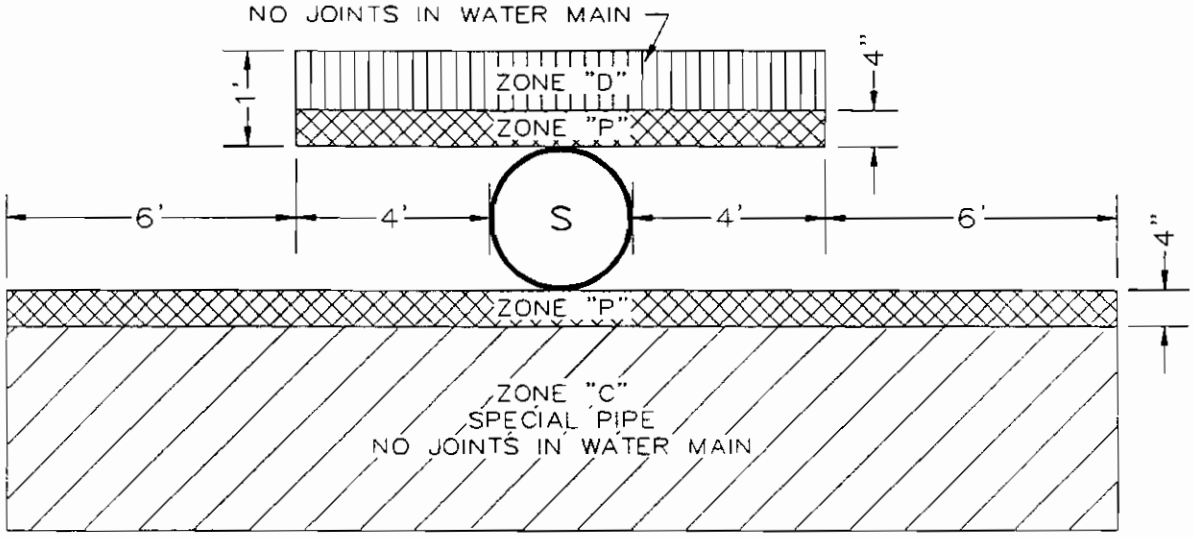

CASE 2

NEW WATER MAIN

SEWER AND WATER MAIN PERPENDICULAR SEPARATION

(PER STATE OF CALIFORNIA, HUMAN AND WELFARE AGENCY, DEPARTMENT OF HEALTH SERVICES)

REVISIONS				
NO	DATE	INIT		APP'D

DEPARTMENT OF WATER AND POWER
WATER SYSTEM — CITY OF LOS ANGELES

	NAME	DATE	APPROVED	
DESIGNED	V. TOROMANIAN	9-91	B. WEINSTEIN	JUNE '92
DRAWN	V. TOROMANIAN	9-91		
CHECKED	L. NUNO	9-91		

A9438

PIPE SIZE	DEFLECTION θ AND CORRESPONDING CURVE RADIUS R*												DEFLECTION θ			
	0° (∞')	0°43' (1599')	0°54' (1273')	1° (1146')	1°07' (1026')	1°40' (688')	2° (573')	3° (382')	4° (286')	5° (229')	6° (191')	7° (164')	8°	9°	10°	>10°
4"									5/16"	3/8"	1/2"	9/16"	5/16"	3/8"	3/8"	
6"								5/16"	7/16"	9/16"	11/16"	13/16"	7/16"	1/2"	9/16"	
8"							5/16"	7/16"	5/8"	3/4"	7/8"	1 1/16"	5/8"	11/16"	3/4"	
12"						3/8"	7/16"	11/16"	7/8"	1 1/8"	1 3/8"	1 9/16"	7/8"	1"	1 1/8"	
16"				1/4"	5/16"	7/16"	9/16"	13/16"	1 1/8"	11/16"	13/16"	1"	1 1/8"	1 1/4"	1 3/8"	
20"			5/16"	3/8"	3/8"	9/16"	11/16"	1 1/16"	11/16"	7/8"	1 1/16"	1 1/4"	1 3/8"	1 9/16"	1 3/4"	
	PULL JOINT		AMOUNT OF CUT "C" CUT SPIGOT AS SHOWN ON DETAIL A						AMOUNT OF CUT "B" BEVEL PIPE AND FORM MITER JOINT AS SHOWN ON DETAIL B							USE ELBOW
			USE ELBOW (OPTIONAL)													

* CURVE RADIUS R IS BASED ON 20' PIPE JOINT LENGTH

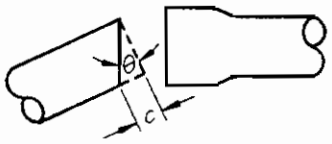

DETAIL A

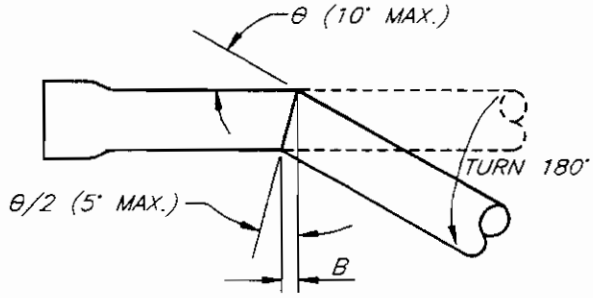

DETAIL B

NOTES:

1. INSTALLED PIPE SHALL NOT DEVIATE MORE THAN ONE FOOT AT ANY POINT ALONG THE PIPE FROM THE LOCATION SHOWN ON CONSTRUCTION DRAWING.
2. BEVEL PIPE AT 5° MAXIMUM VERTICAL ANGLE. JOINT SHALL BE BUTT WELD TYPE. PIPE SHALL BE CUT SMOOTHLY WITHOUT DAMAGE TO THE CEMENT LINING.
3. AS AN ALTERNATIVE, SHORT LENGTHS OF PIPE MAY BE USED TO ACCOMPLISH THE DESIRED CURVATURE.

TABLE OF ALLOWABLE JOINT DEFLECTION IN STEEL PIPE

A9439

REVISIONS NO	DATE	INIT.		APP'D

DEPARTMENT OF WATER AND POWER
WATER SYSTEM — CITY OF LOS ANGELES

	NAME	DATE	APPROVED
DESIGNED	L. NUNO	1-90	B. WEINSTEIN JUNE '92
DRAWN	V. TOROMANIAN	3-92	
CHECKED	L. NUNO	3-92	

FIGURE 1

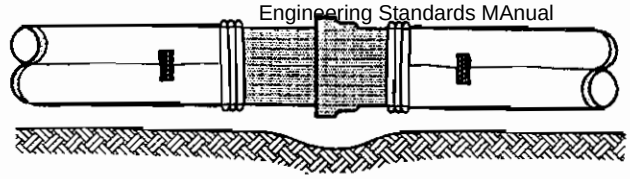

FIGURE 2

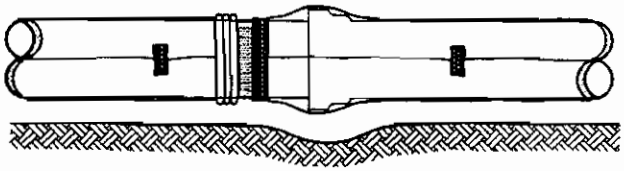

FIGURE 3

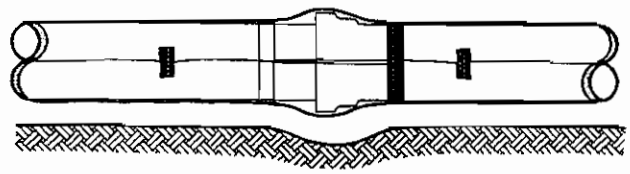

FIGURE 4

1. Cut clear-colored, 8-mil thick polyethylene tube to a length approximately 2 feet longer than that of the pipe section. The minimum flat tube width shall be 16, 20, 24, 30, and 37 inches for 4, 6, 8, 12, and 16-inch pipe respectively.

2. Ensure the pipe is clean prior to installation of the polyethylene tube. Slip the tube around the pipe, centering it to provide 1-foot overlap on each adjacent pipe section. Take up the slack width to make snug, but not tight, fit along the barrel of the pipe, securing the fold with 2-inch wide and 10-mil thick dielectric adhesive tape at quarter points (Figure 1).

3. Lower the pipe into the trench and make-up the pipe joint with the preceding section of pipe. A shallow bell hole in the bedding must be made at joints to facilitate installation of the polyethylene tube (Figure 2). Alternately, pipe may be laid on sand bags in the trench.

4. Pull the bunched polyethylene from the preceding length of pipe, slip it over the end of the new length of pipe, and secure it in place (Figure 3). Then slip the end of the polyethylene from the new pipe section over the end of the first wrap until it overlops the joint at the end of the preceding length of pipe and secure it in place (Figure 4).

5. Repair any rips, punctures, or other damage to the polyethylene with dielectric adhesive tape or with a short length of polyethylene tube cut open, wrapped around the pipe, and secured in place. Proceed with installation of the next section of pipe in the same manner.

6. Cover bends, reducers, offsets, and other pipe shaped appurtenances with polyethylene in the same manner as the pipe.

7. When valves, tees, crosses, and other odd-shaped pieces cannot be wrapped practically in a tube, wrap with a flat sheet or split length of polyethylene tube by passing the sheet under the appurtenance and bringing it up around the body. Make seams by bringing the edges together, folding over twice, and taping down. Handle width and overlaps at joints described above. Tape polyethylene securely in place at valve stem and other penetrations.

8. Provide openings for branches, service taps, blow-offs, air valves, and similar appurtenances by making an x-shaped cut in the polyethylene and temporarily folding back the film. After the appurtenance is installed, tape the slack securely to the polyethylene, with tape Cover all exposed clamps and other appurtenances with polyethylene to the trench wall or 3 feet beyond the pipe using the method described in step 7 above.

9 Extend the polyethylene wrap to cover adjacent DI/CI/AC pipe a minimum of 2 feet and adjacent steel pipe to the DI side of the pre-assembled insulating flange Secure the end with circumferential turns of dielectric adhesive tape.

POLYETHYLENE WRAP INSTALLATION INSTRUCTIONS

A9440

REVISIONS				
NO.	DATE	INIT.		APP'D

DEPARTMENT OF WATER AND POWER
WATER SYSTEM — CITY OF LOS ANGELES

	NAME	DATE	APPROVED	
DESIGNED	V. TOROMANIAN	6-92	B. WEINSTEIN	JUNE '92
DRAWN	V. TOROMANIAN	6-92		
CHECKED	C. HAMVAS	6-92		

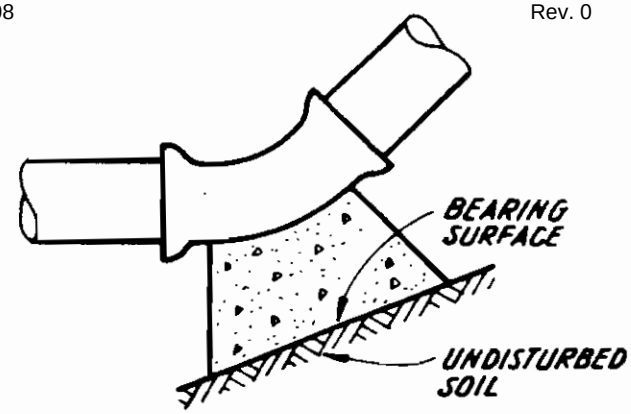

BEND

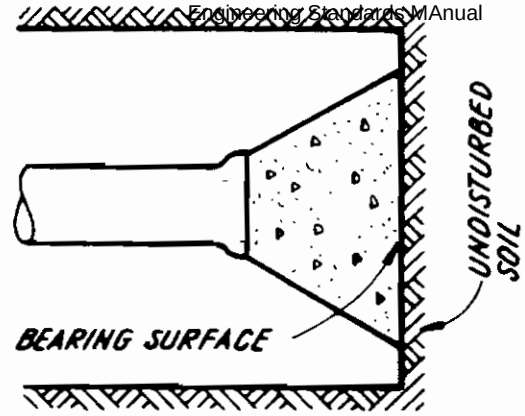

DEAD END

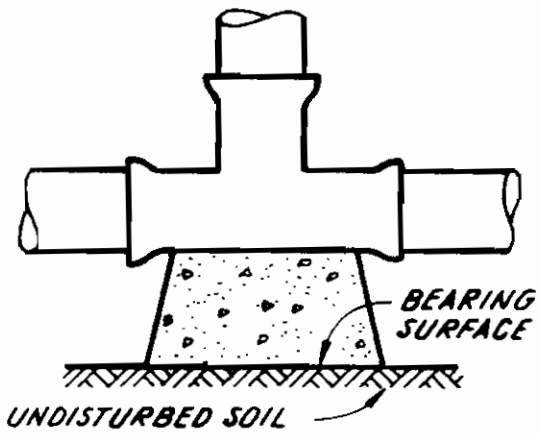

TEE/CLAMP/WELD NIPPLE

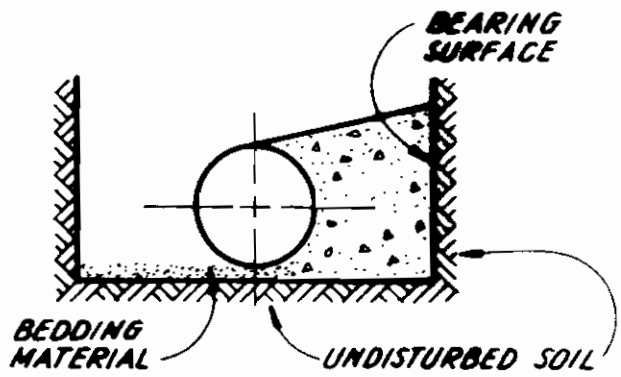

TYPICAL CROSS SECTION

TABLE I

MINIMUM BEARING SURFACE AREA (IN SQUARE FEET)

SIZE OF PIPE	BENDS				TEE, CLAMP, WELD NIPPLE OR DEAD END
	11¼°	22½°	45°	90°	
4"	1	1	1	2	2
6"	1	2	3	4	3
8"	1	2	4	8	5
12"	3	5	9	16	12
16"	4	8	16	29	21
20"	7	13	25	45	32

TABLE II

* * * SOIL TYPE	* * * * MAX. ALLOWABLE SOIL BEARING VALUES	FACTORS FOR INCREASING AREAS IN TABLE I
LOOSE SAND	500 PSF	4
SOFT SANDY CLAY	1000 PSF	2
ADOBE	1000 PSF	2
COMPACT FINE SAND	2000 PSF	1
COMPACT COARSE SAND	2000 PSF	1
MEDIUM STIFF CLAY	2000 PSF	1

* * * THE CONTRACTOR SHALL BE RESPONSIBLE FOR DETERMINING THE SAFE SOIL BEARING VALUES AND THE POSITION AND SIZE OF BEARING AREAS.

* * * * BASED ON 2 FEET MINIMUM DEPTH OF COVER OVER THE PIPE.

NOTES:

1. ALL FITTINGS SUBJECTED TO AN UNBALANCED HYDROSTATIC FORCE SHALL BE RESTRAINED WITH 2000 PSI CONCRETE THRUST BLOCKS BEARING AGAINST UNDISTURBED SOIL.
2. BEARING VALUES SHOWN IN TABLE I ARE BASED ON 200 PSI INTERNAL PIPE PRESSURE AND DO NOT CONSIDER THE EFFECT OF RESTRAINED OR HARNESSED JOINTS.

CONCRETE THRUST BLOCK
BEARING SURFACE AND INSTALLATION

A9441

NO.	DATE	INITL'S.	REVISIONS DESCRIPTION	APP'V'D

DEPARTMENT OF WATER AND POWER
WATER SYSTEM — CITY OF LOS ANGELES

	NAME	DATE	APPROVED
DESIGNED	L.N.	12/86	
DRAWN	A. SAVULIAN	12/86	
CHECKED	[illegible]	12/86	

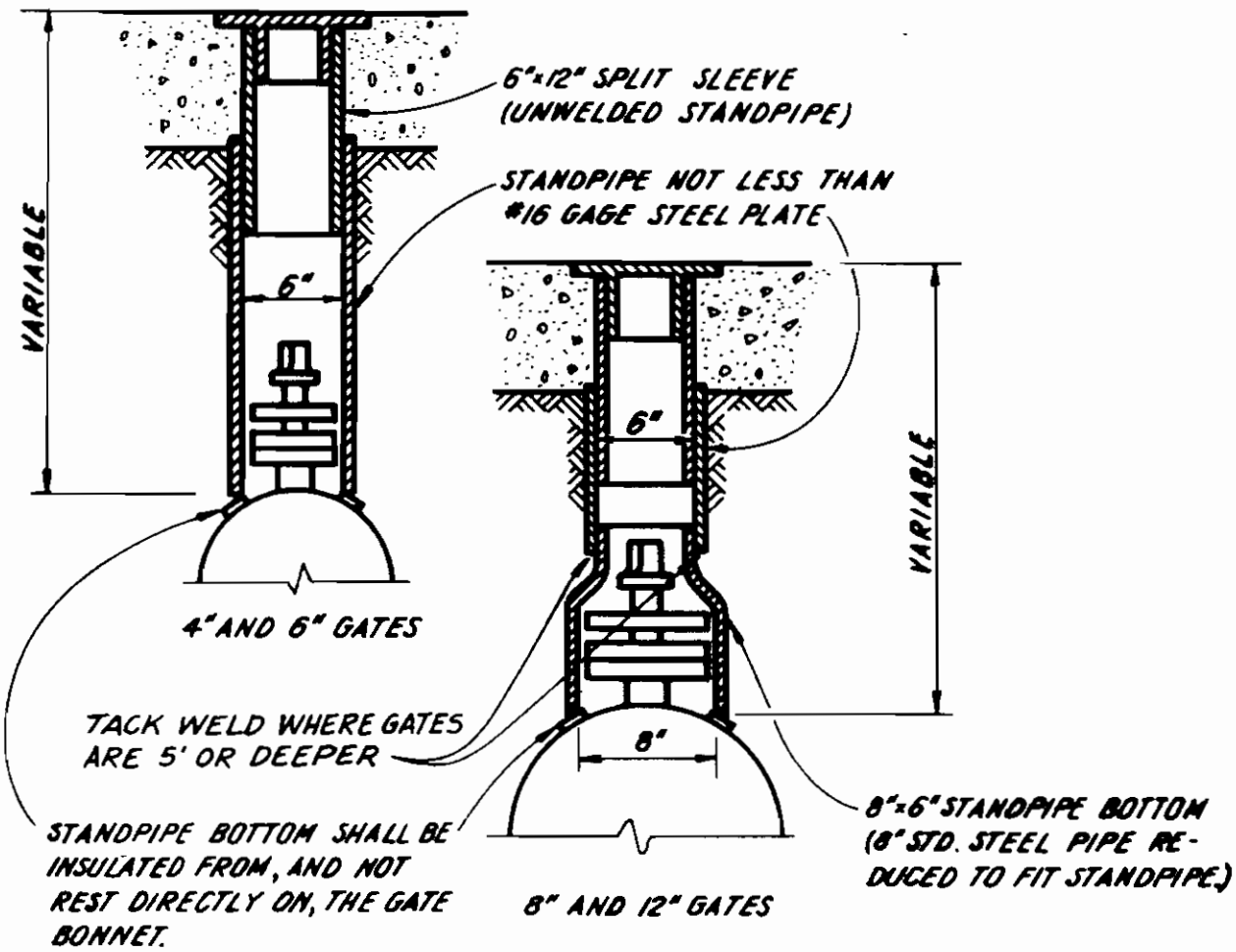

NOTES:

6" WELDED STANDPIPE FURNISHED IN 12", 18", 24", 30" & 36" LENGTHS.
6" UNWELDED STANDPIPE (SPLIT SLEEVE) IS FURNISHED IN 1 FT. LENGTHS.

STANDPIPE FOR 4"-12" LINE VALVES

A9442

NO.	DATE	INI'TL'S.	REVISIONS DESCRIPTION	APP'V'D

DEPARTMENT OF WATER AND POWER
WATER SYSTEM — CITY OF LOS ANGELES

	NAME	DATE	APPROVED
DESIGNED	L.N.	11/86	
DRAWN	A. SAVULIAN	11/86	
CHECKED	[illegible]	12/[illegible]	

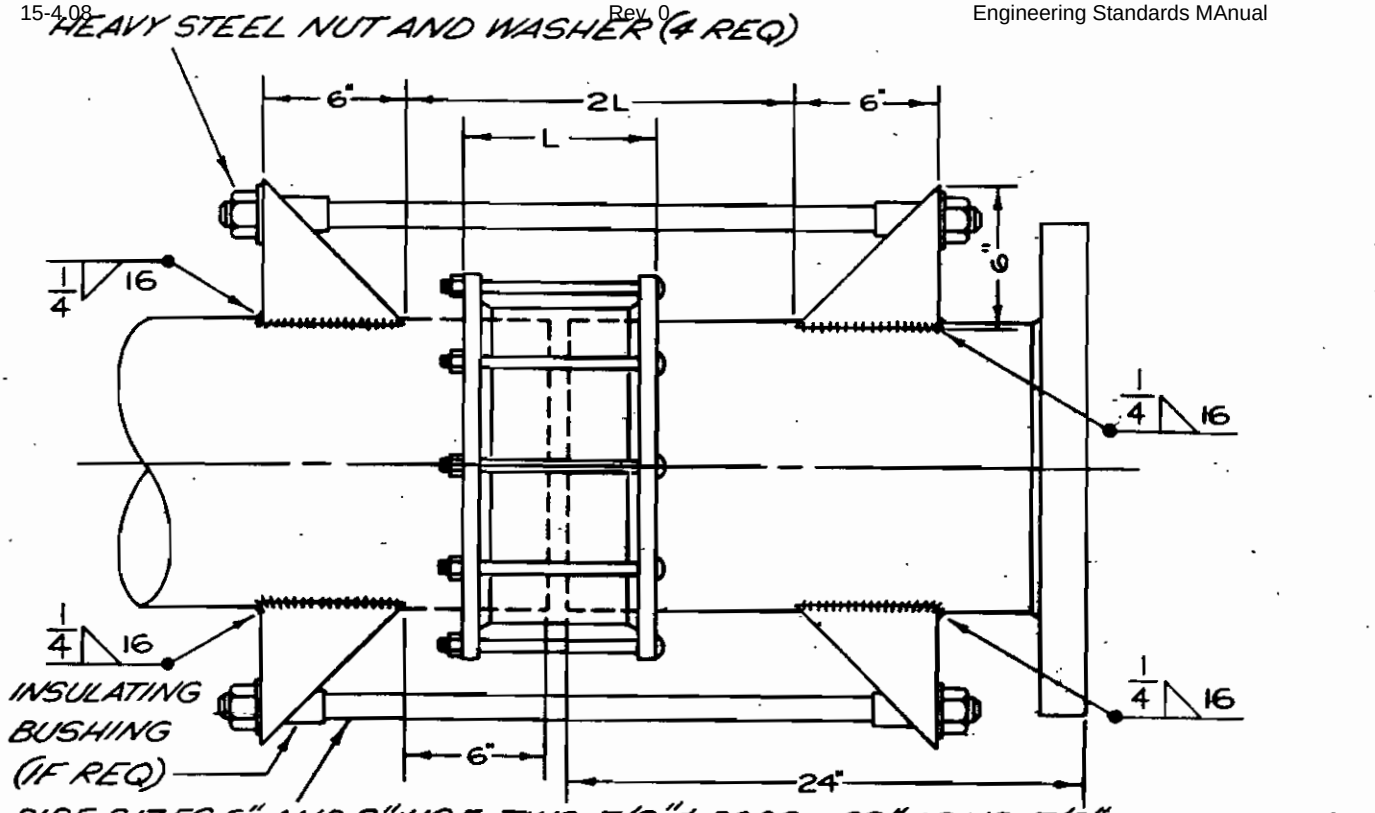

PLAN VIEW

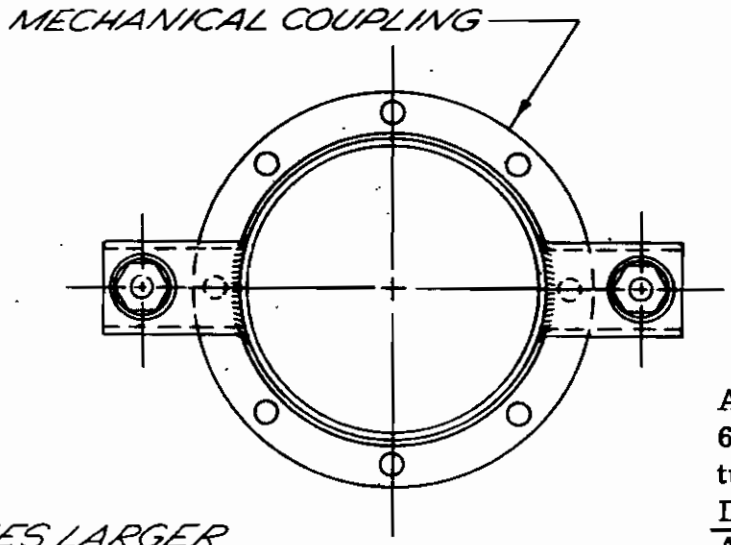

END VIEW

SIZES LARGER THAN 12" MUST BE INDIVIDUALLY DESIGNED.

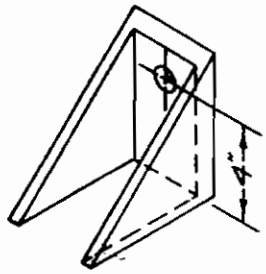

ANCHOR

Anchors to be fabricated from 6" x 4" x 3/8" hollow structural sections (4 required). Drill all holes in the shop. Anchors with 2 different hole sizes will be fabricated -- 1 1/4" and 1". Torch cut pipe radius at installation site.

ANCHOR BOX ASSEMBLY FOR MECHANICAL COUPLING
SIZES 6" THRU 12" ONLY

REVISIONS				
NO.	DATE	IN'TL'S.	DESCRIPTION	APP'V'D
1	6-17-66	M.E.B.	WAS 18"	WJB
2	6-21-66	M.E.B.	REVERSED COUPL'G & BOOT	WJB

DEPARTMENT OF WATER AND POWER
WATER SYSTEM — CITY OF LOS ANGELES

	NAME	DATE	APPROVED
DESIGNED	R.S.B.	9-15-66	W J Burns 10/15/68
DRAWN	M.E.B.	11-2-66	
CHECKED	R.S.B.	12-4-66	

0 A9194

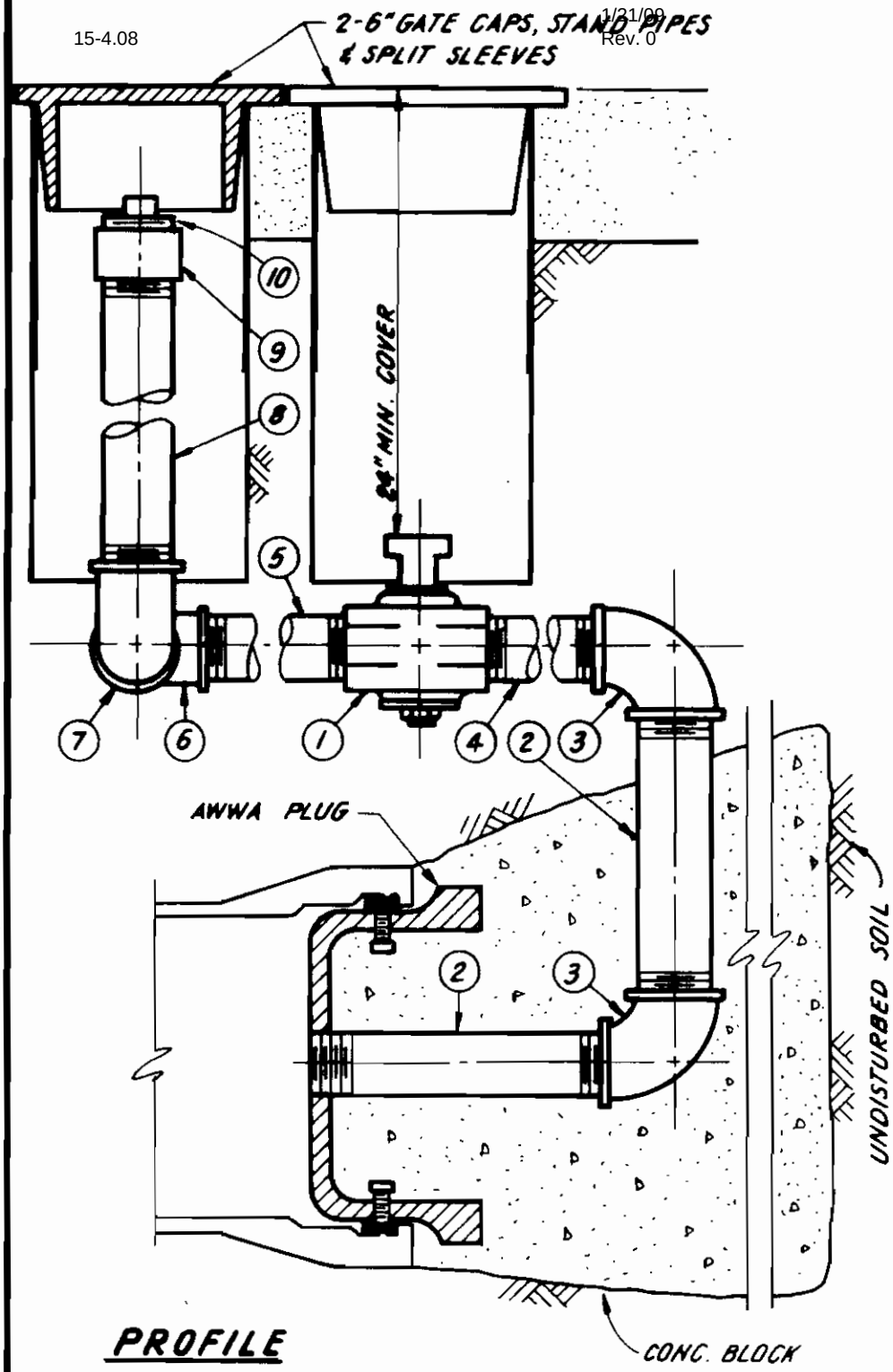

PROFILE

MAY BE OFFSET TO MEET FIELD CONDITIONS.

MATERIAL LIST

MTL. CODE	ITEM	EA.	DESCRIPTION	MTL. CODE	ITEM	EA.	DESCRIPTION
42-29-484	1	1	2" VLV. CURB BRZ. SMALL	42-09-924	6	2	2" 90° ELL. PIPE BRZ. (A-9325)
42-09-367	2	2	2"x6" NIP. PIPE BRS. SCR.	42-09-939	7	1	2" ELL. PIPE ST. BRZ. 90° (A-9326)
42-09-924	3	2	2" 90° ELL. BRZ. (A-9325)	42-09-374	8	1	2"x 80" NIP. PIPE BRZ. SCR.
42-09-366	4	1	2"x6" PIPE BRS. SCR. REG	42-09-970	9	1	2" COUPLING PIPE BRZ.
42-09-366	5	1	2"x6" NIP. PIPE BRS. SCR.	42-09-530	10	1	2" PLUG PIPE BRZ. SQ. H.

2" STOP-COCK & BLOW-OFF INSTALLATION FOR D.I. PIPE

NO.	DATE	IN'TL'S.	REVISIONS DESCRIPTION	APP'V'D

DEPARTMENT OF WATER AND POWER
WATER SYSTEM — CITY OF LOS ANGELES

	NAME	DATE
DESIGNED	L.N	11/86
DRAWN	A.SAVULIAN	11/86
CHECKED	[illegible]	[illegible]

APPROVED

A9443

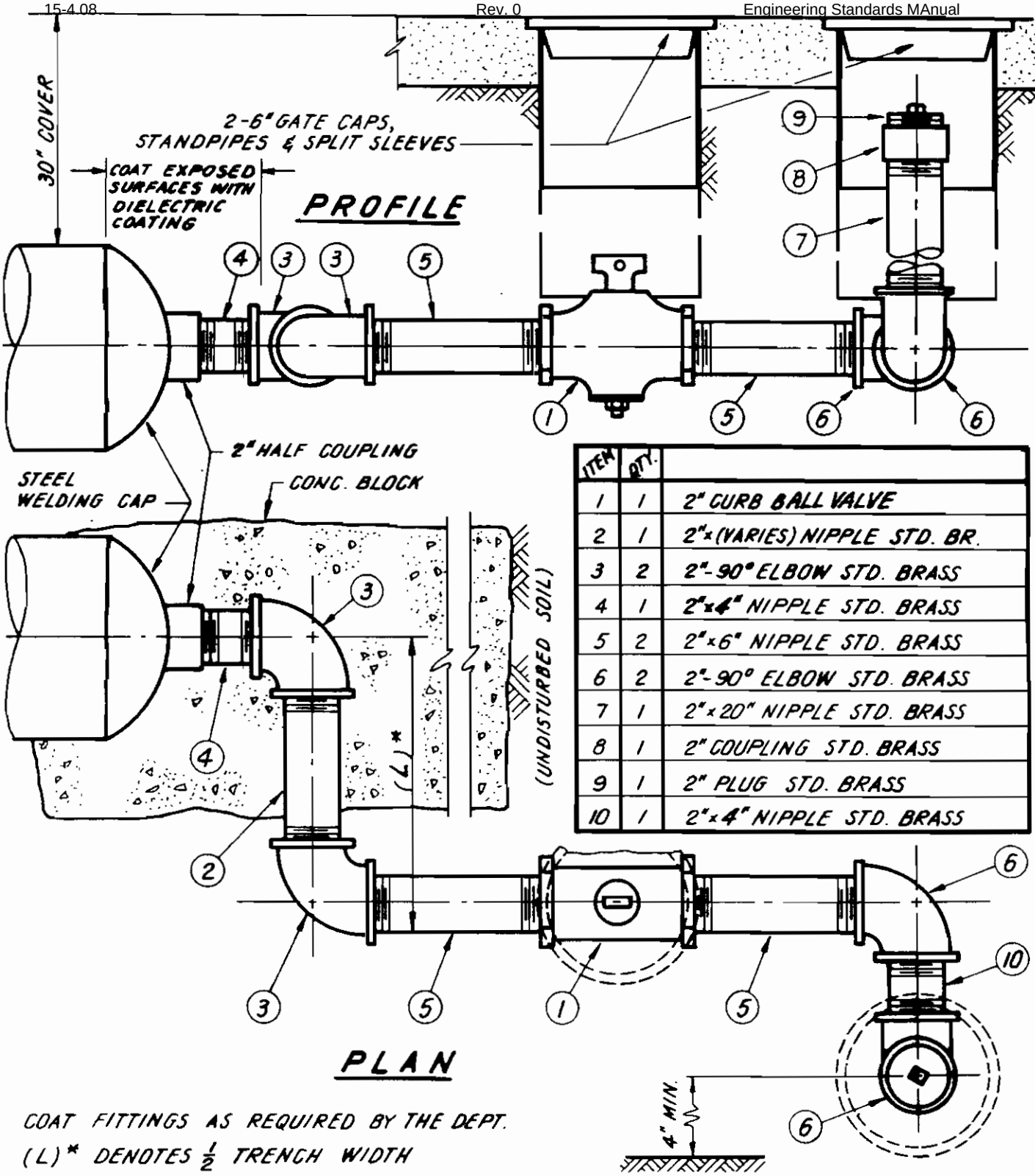

ITEM	QTY.	
1	1	2" CURB BALL VALVE
2	1	2"x(VARIES) NIPPLE STD. BR.
3	2	2"-90° ELBOW STD. BRASS
4	1	2"x4" NIPPLE STD. BRASS
5	2	2"x6" NIPPLE STD. BRASS
6	2	2"-90° ELBOW STD. BRASS
7	1	2"x20" NIPPLE STD. BRASS
8	1	2" COUPLING STD. BRASS
9	1	2" PLUG STD. BRASS
10	1	2"x4" NIPPLE STD. BRASS

COAT FITTINGS AS REQUIRED BY THE DEPT.

(L)* DENOTES $\frac{1}{2}$ TRENCH WIDTH

2" STOP-COCK & BLOW-OFF INSTALLATION FOR STEEL PIPE

A9444

REVISIONS				
NO.	DATE	IN'TL'S.	DESCRIPTION	APP'V'D

DEPARTMENT OF WATER AND POWER
WATER SYSTEM — CITY OF LOS ANGELES

	NAME	DATE	APPROVED
DESIGNED	L. N.	11/86	
DRAWN	A. SAVULIAN	11/86	
CHECKED	[illegible]	12/86	

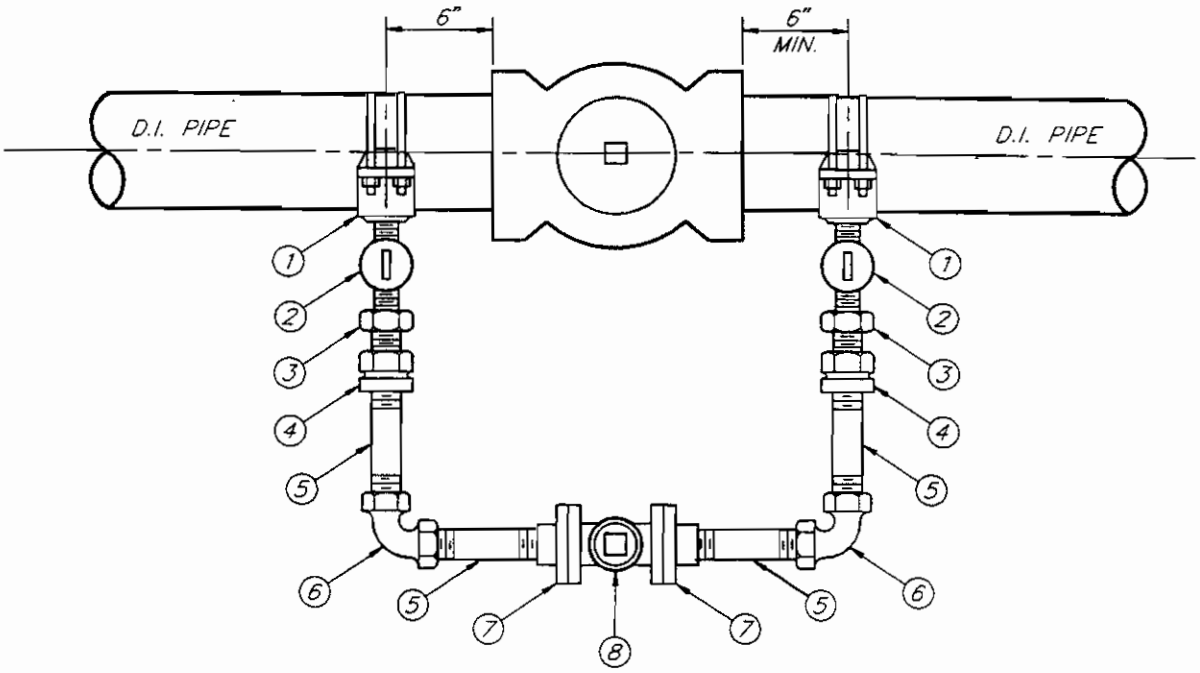

MATERIALS:

1. – 1-1/2" BRONZE DOUBLE STRAP CLAMP
2. – 1-1/2" BRONZE CORP THREAD TO COPPER TUBING CORP. BALL VALVE
3. – 2" X 1-1/2" BRASS ADAPTOR (A9361)
4. – 2" BRONZE FEMALE B&S TO FEMALE STD. N.P.T.
5. – 2" BRONZE STD. NIPPLE PIPE
6. – 2" X 90° BRONZE STD. ELBOW
7. – 2" X 250# COMPANION FLANGE
8. – 2" X 400# FLANGED "NORDSTROM" VALVE WITH GATE NUT ADAPTER

NOTES:

1. 2-INCH BYPASS IS REQUIRED FOR 8-INCH AND 12-INCH LINE VALVES WHEN THE MAXIMUM STATIC PRESSURE EXCEEDS 185 AND 125 PSI, RESPECTIVELY. BYPASS IS NOT REQUIRED ON FIRE HYDRANT LATERALS AND 6-INCH MAINS.
2. PROVIDE STANDPIPES FOR BOTH, MAIN VALVE AND BYPASS VALVE IN ACCORDANCE WITH DWPWS STANDARD DRAWING A9442.
3. USE LOCKING TYPE RUBBER GASKETS AT THE GATE VALVE.

2-INCH BYPASS FOR 8-INCH AND 12-INCH LINE VALVES IN D.I. PIPE

A9445

REVISIONS				
NO.	DATE	INIT		APP'D

DEPARTMENT OF WATER AND POWER
WATER SYSTEM — CITY OF LOS ANGELES

	NAME	DATE	APPROVED
DESIGNED	V. TOROMANIAN	4-92	B. WEINSTEIN JULY '92
DRAWN	V. TOROMANIAN	5-92	
CHECKED	C. HAMVAS	5-92	

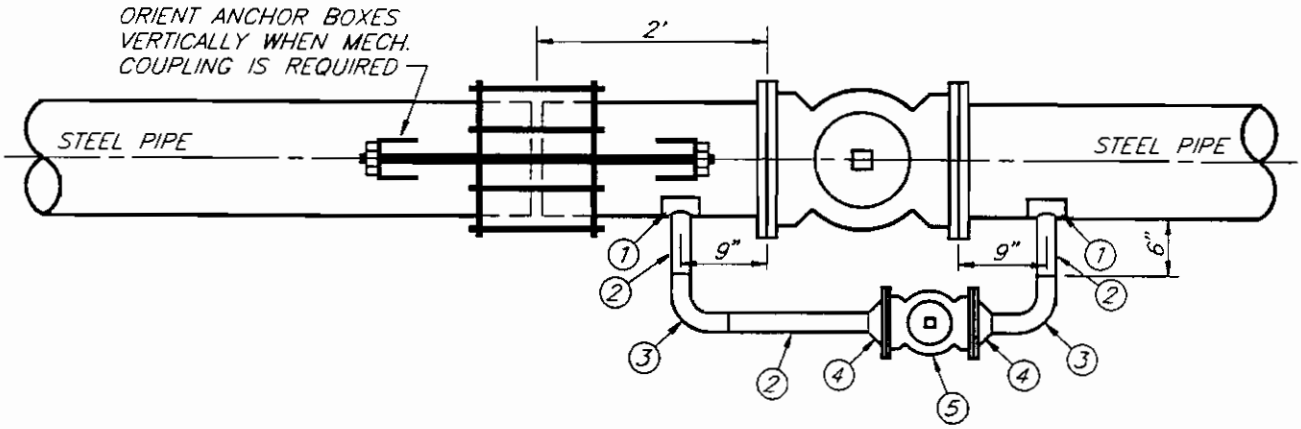

MATERIALS:

(1) – 4" X 4" X (PIPE THICKNESS) STEEL WELD PAD

(2) – 2" SCHEDULE 80 STEEL PIPE

(3) – 2" X 90° EXTRA HEAVY STEEL WELD ELL

(4) – 2" X 400# STEEL WELD NECK FLANGE

(5) – 2" X 400# FLANGED "NORDSTROM" VALVE W/ OPERATING NUT ADAPTOR

NOTES:

1. 2-INCH BYPASS IS REQUIRED FOR 6-INCH, 8-INCH, AND 12-INCH LINE VALVES WHEN THE MAXIMUM STATIC PRESSURE EXCEEDS 250, 185, AND 125 PSI, RESPECTIVELY. BYPASS IS NOT REQUIRED ON FIRE HYDRANT LATERALS AND 4-INCH MAINS.

2. LINE, COAT, AND WRAP BYPASS PIPE AND FITTINGS WITH CEMENT WASH, DIELECTRIC COATING, AND "OZENBERG" CLOTH, RESPECTIVELY.

3 PROVIDE STANDPIPES FOR BOTH, MAIN VALVE AND BYPASS VALVE IN ACCORDANCE WITH DWPWS STANDARD DRAWING A9442.

2-INCH BYPASS FOR
6-INCH, 8-INCH, AND 12-INCH LINE VALVES IN STEEL PIPE

A9446

REVISIONS				
NO	DATE	INIT		APP'D

DEPARTMENT OF WATER AND POWER
WATER SYSTEM — CITY OF LOS ANGELES

	NAME	DATE	APPROVED	
DESIGNED	L. NUNO	1-91	B. WEINSTEIN	JULY '92
DRAWN	V. TOROMANIAN	3-92		
CHECKED	C. HAMVAS	3-92		

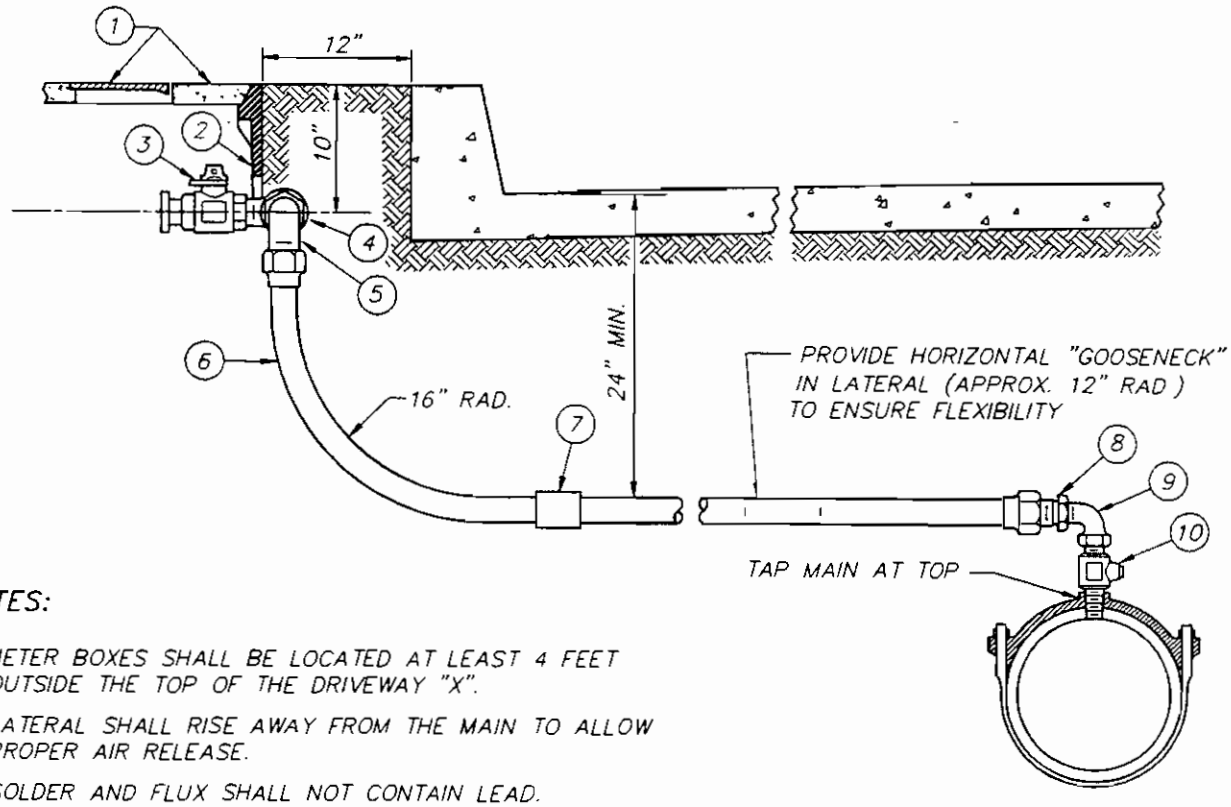

NOTES:

1. METER BOXES SHALL BE LOCATED AT LEAST 4 FEET OUTSIDE THE TOP OF THE DRIVEWAY "X".
2. LATERAL SHALL RISE AWAY FROM THE MAIN TO ALLOW PROPER AIR RELEASE.
3. SOLDER AND FLUX SHALL NOT CONTAIN LEAD.
4. LATERAL SHALL BE FLUSHED WITH WATER TO REMOVE FLUX RESIDUE.
5. CURB VALVE MAY BE INSTALLED IN ROADWAY SECTION UNDER A 6-INCH STANDPIPE IN LIEU OF METER BOX WHEN AUTHORIZED BY DWPWS INSPECTOR.
6. SEE STANDARD DRAWING A9476 FOR PIPE CONNECTION REQUIREMENTS.

MATERIAL LIST

ITEM	QTY.	DESCRIPTION	DWG. NO.	MAT. CODE
1	1	#2 CONCRETE HINGED COVER	B-5050-4	39-01-210
2	1	#2 PLASTIC METER BOX	A-9420	39-01-250
3	1	2" BRZ. FLANGE CURB BALL VALVE W/LOCKWING	--------	42-29-494
4	1	2" BRZ. STREET ELBOW	A-9314	42-09-939
5	1	2" BRZ. MALE COPPER TUBING TO MALE N.P.T. ELBOW	A-9237	42-09-230
6	VAR.	2" COPPER TUBING	--------	42-09-663
7	VAR.	2" COPPER SOLDER COUPLING	--------	42-75-182
8	1	2" X 1-1/2" BRASS ADAPTOR	A-9361	42-09-002
9	1	1-1/2" BRONZE FEMALE TO MALE COPPER TUBING ELBOW	--------	--------
10	1	1-1/2" BRONZE MALE CORPORATION THREAD TO MALE COPPER TUBING CORPORATION BALL VALVE	--------	42-28-464

2" AIR VALVE INSTALLATION FOR D.I. PIPE

A9447

REVISIONS

NO.	DATE	INIT.		APP'D

DEPARTMENT OF WATER AND POWER
WATER SYSTEM — CITY OF LOS ANGELES

	NAME	DATE	APPROVED
DESIGNED	V. TOROMANIAN	7-92	B. WEINSTEIN BW JULY '92
DRAWN	V. TOROMANIAN	7-92	
CHECKED	C. HAMVAS	7-92	

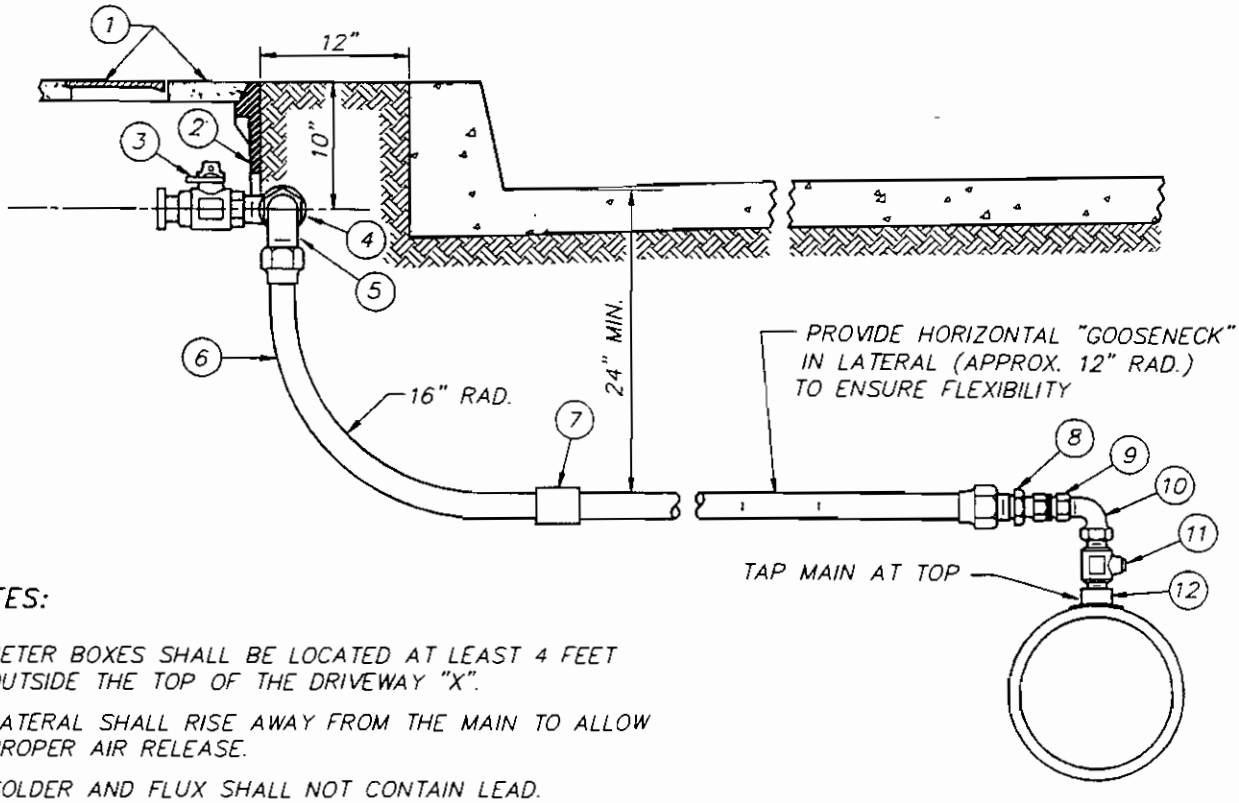

NOTES:

1. METER BOXES SHALL BE LOCATED AT LEAST 4 FEET OUTSIDE THE TOP OF THE DRIVEWAY "X".
2. LATERAL SHALL RISE AWAY FROM THE MAIN TO ALLOW PROPER AIR RELEASE.
3. SOLDER AND FLUX SHALL NOT CONTAIN LEAD.
4. LATERAL SHALL BE FLUSHED WITH WATER TO REMOVE FLUX RESIDUE.
5 CURB VALVE MAY BE INSTALLED IN ROADWAY SECTION UNDER A 6-INCH STANDPIPE IN LIEU OF METER BOX WHEN AUTHORIZED BY DWPWS INSPECTOR.
6. SEE STANDARD DRAWING A9476 FOR PIPE CONNECTION REQUIREMENTS.

MATERIAL LIST

ITEM	QTY.	DESCRIPTION	DWG. NO.	MAT. CODE
1	1	#2 CONCRETE HINGED COVER	B-5050-4	39-01-210
2	1	#2 PLASTIC METER BOX	A-9420	39-01-250
3	1	2" BRZ. FLANGE CURB BALL VALVE W/LOCKWING	-------	42-29-494
4	1	2" BRZ. STREET ELBOW	A-9314	42-09-939
5	1	2" BRZ. MALE COPPER TUBING TO MALE N.P.T. ELBOW	A-9237	42-09-230
6	VAR.	2" COPPER TUBING	-------	42-09-663
7	VAR.	2" COPPER SOLDER COUPLING	-------	42-75-182
8	1	2" X 1-1/2" BRASS ADAPTOR	A-9361	42-09-002
9	1	1-1/2" BRZ. INSULATING COUPLING	-------	42-00-051
10	1	1-1/2" BRONZE FEMALE TO MALE COPPER TUBING ELBOW	-------	--------
11	1	1-1/2" BRONZE MALE CORPORATION THREAD TO MALE COPPER TUBING CORPORATION BALL VALVE	-------	42-28-464
12	1	1-1/2" STEEL CORPORATION THREAD WELD COUPLING	A-9365	13-08-171

2" AIR VALVE INSTALLATION FOR STEEL PIPE

A9448

REVISIONS

NO.	DATE	INIT.		APP'D

DEPARTMENT OF WATER AND POWER
WATER SYSTEM — CITY OF LOS ANGELES

	NAME	DATE	APPROVED
DESIGNED	V. TOROMANIAN	7-92	B. WEINSTEIN JULY '92
DRAWN	V. TOROMANIAN	7-92	
CHECKED	C. HAMVAS	7-92	

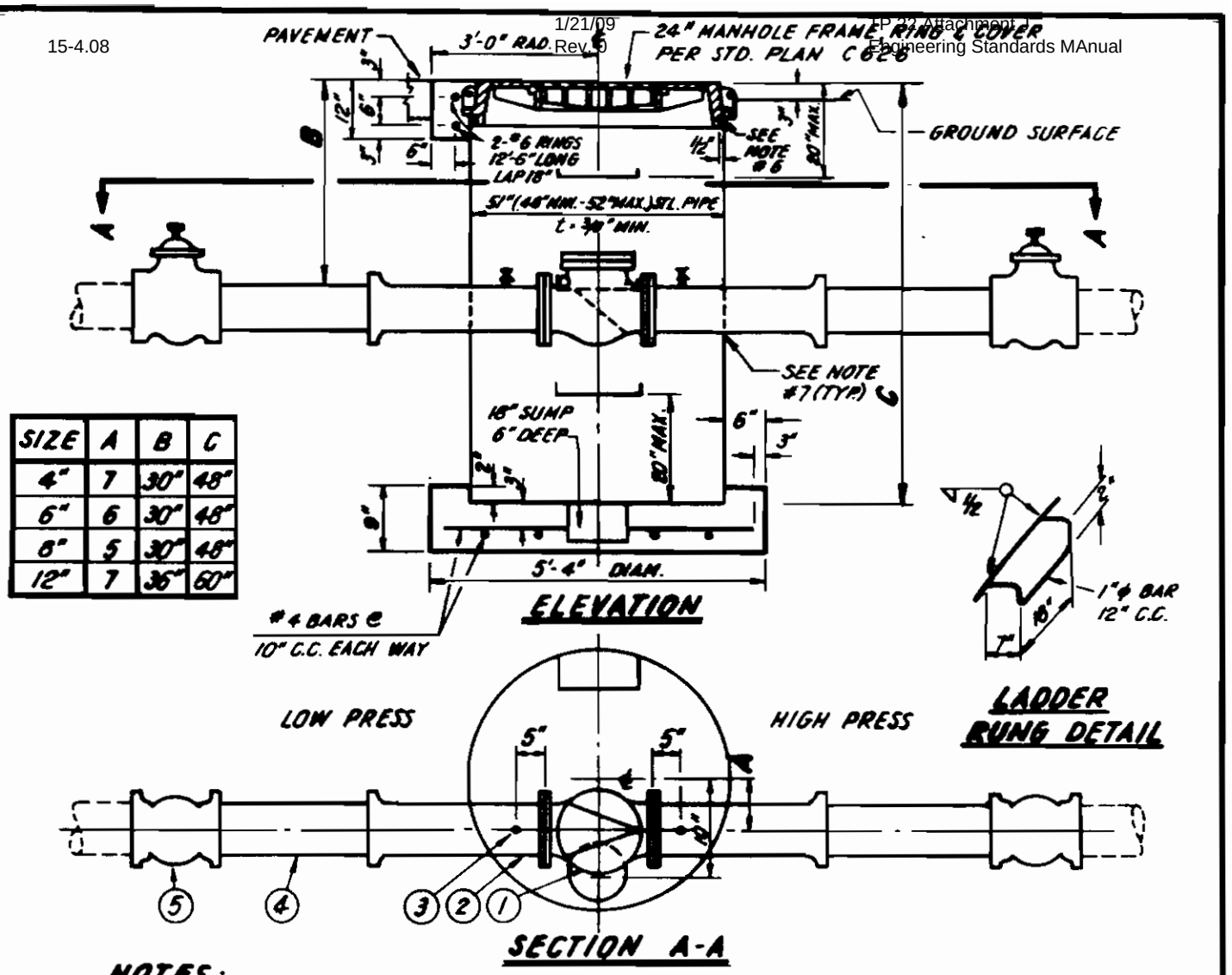

SIZE	A	B	C
4"	7	30"	48"
6"	6	30"	48"
8"	5	30"	48"
12"	7	36"	60"

NOTES:

1. ALL PUSH-ON JOINTS SHALL BE FITTED WITH JOINT-LOCK GASKET.
2. A BY-PASS MAY BE REQUIRED WHEN THERE IS NO ALTERNATE SUPPLY TO THE LOWER SYSTEM DURING AN OUTAGE OF ITS SOURCE.
3. ENAMEL ALL EXPOSED SURFACES PER A.W.W.A. STD. SPEC. Nº C 203.
4. ALL REINF. BARS: INTERMEDIATE GRADE, A.S.T.M. - A615 GRADE 40.
5. CONC. CLASS 560-C-3250
6. PLACE METAL WEDGES AND FELT IN SPACE TO PREVENT RING FROM SHIFTING.
7. STANDPIPE SHALL BE ELECTRICALLY ISOLATED FROM WATER MAIN.

MATERIAL LIST

ITEM	QTY.	DESCRIPTION
1	1	C.I. FLANGED CHECK VALVE
2	2	27" LONG D.I. R.G. FLG./BELL ADAPTOR
3	2	1" BRZ. B. & S. CORP. THRD. CORP. BALL VALVE
4	2	D.I. R.G. NIPPLE AWWA
5	2	C.I. R.G. GATE VALVE

CHECK VALVE INSTALLATION FOR D.I. PIPE

A9449

NO.	DATE	INIT'LS.	REVISIONS DESCRIPTION	APP'V'D

DEPARTMENT OF WATER AND POWER
WATER SYSTEM — CITY OF LOS ANGELES

	NAME	DATE	APPROVED
DESIGNED	L.N.	11/86	
DRAWN	A. SAVULIAN	11/86	
CHECKED	[illegible]	12/86	

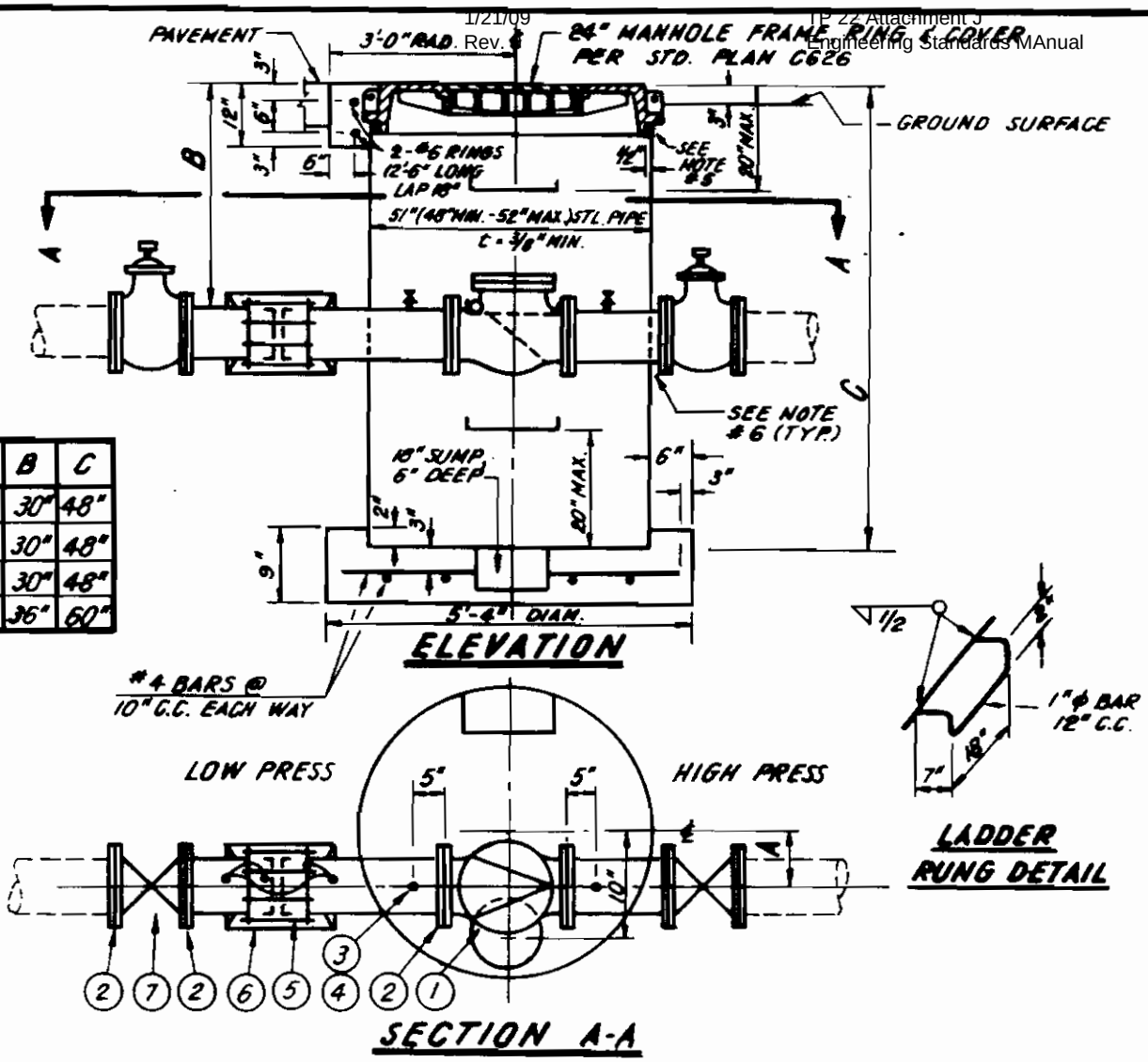

SIZE	A	B	C
4"	7	30"	48"
6"	6	30"	48"
8"	5	30"	48"
12"	7	36"	60"

NOTES:

1. A BY-PASS MAY BE REQUIRED WHEN THERE IS NO ALTERNATE SUPPLY TO THE LOWER SYSTEM DURING AN OUTAGE OF ITS SOURCE.
2. ENAMEL ALL EXPOSED SURFACES PER A.W.W.A. STD. SPEC. Nº C 203.
3. ALL REINF. BARS: INTERMEDIATE GRADE, A.S.T.M.-A615 GRADE 40.
4. CONC. CLASS 560-C-3250
5. PLACE METAL WEDGES AND FELT IN SPACE TO PREVENT RING FROM SHIFTING.
6. STANDPIPE SHALL BE ELECTRICALLY ISOLATED FROM STEEL MAIN.

MATERIAL LIST

ITEM	QTY.	DESCRIPTION
1	1	C.I. FLANGED CHECK VALVE
2	6	WELDING NECK FLANGE
3	2	1" BRZ. B. & S. CORP. THRD. CORP. BALL VALVE
4	2	1" STL. CORP THRD. WELDING COUPLING
5	1	STL. MECH. COUPLING
6	1	ANCHOR BOX ASSEMBLY
7	2	C.I. FLANGED GATE VALVE

CHECK VALVE INSTALLATION FOR STEEL PIPE

A9450

REVISIONS				
NO.	DATE	INITL'S.	DESCRIPTION	APP'V'D

DEPARTMENT OF WATER AND POWER
WATER SYSTEM — CITY OF LOS ANGELES

	NAME	DATE	APPROVED
DESIGNED	L.N.	11/86	
DRAWN	A.SAVULIAN	11/86	
CHECKED	[illegible]	12/86	

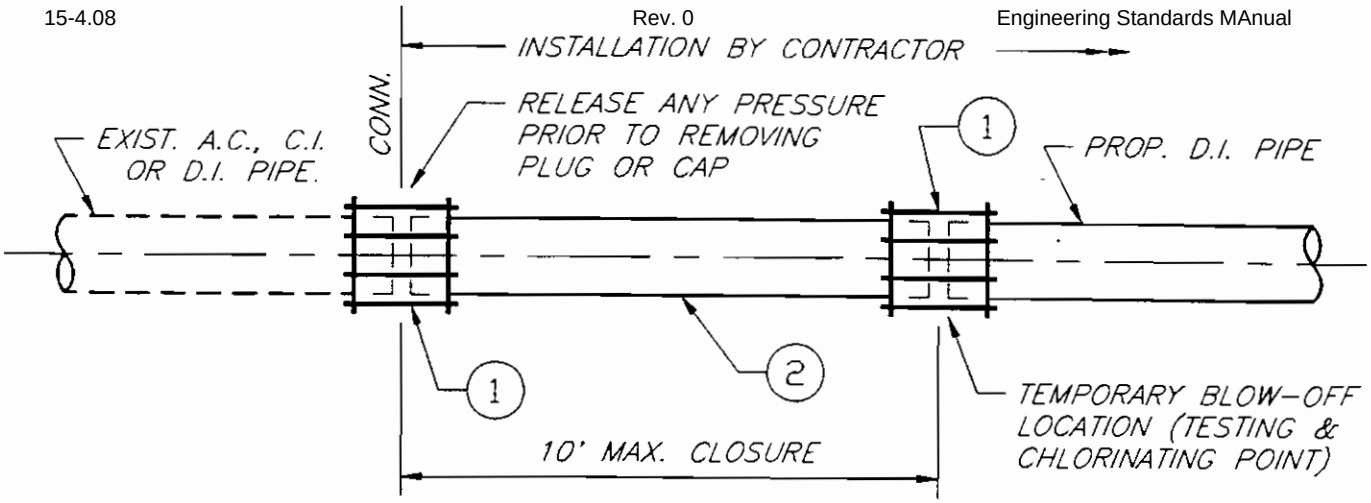

DETAIL 1 – CONNECTION TO EXISTING SPIGOT END

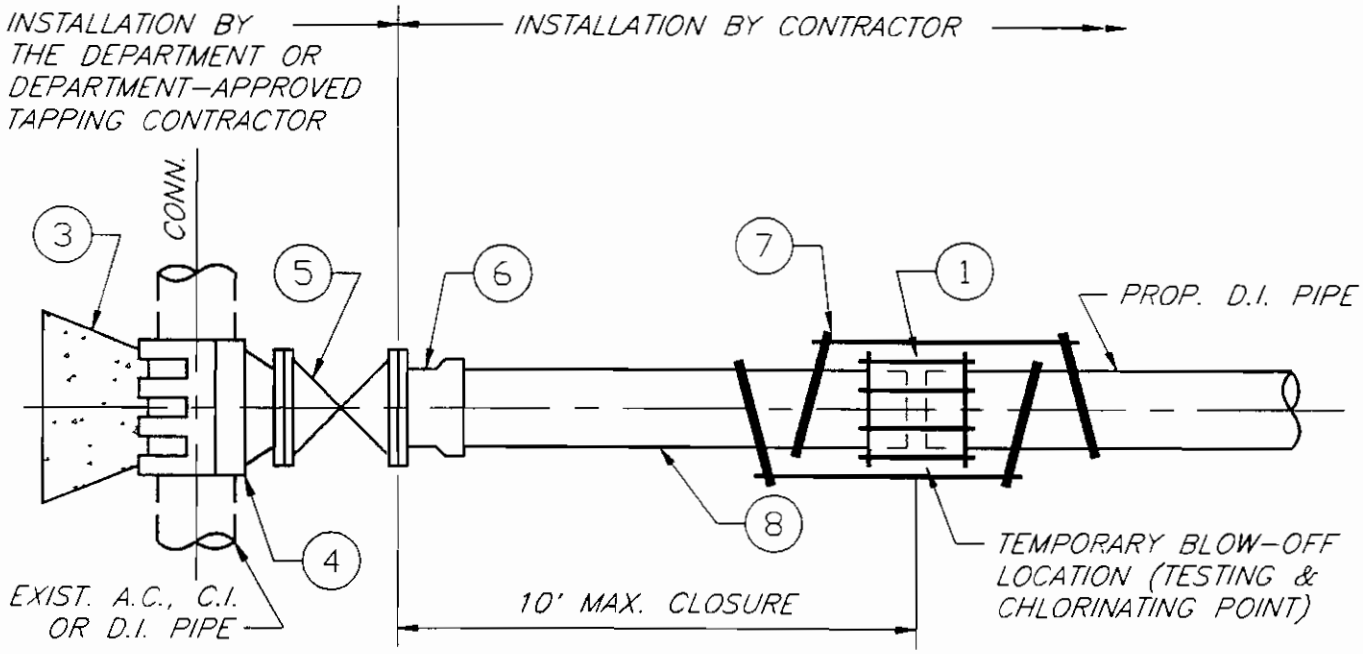

DETAIL 2 – WET-TAP CONNECTION TO EXISTING A.C., C.I. OR D.I. PIPE

1. CAST TRANS. MECH. COUPLING
2. D.I. NIPPLE
3. CONCRETE THRUST BLOCK
4. TAPPING SLEEVE
5. FLANGED GATE VALVE
6. D.I. R.G. FLANGE/BELL ADAPTOR
7. SAFETY YOKES & RODS
8. D.I. R.G. NIPPLE

D.I. PIPE CONNECTIONS TO EXISTING A.C., C.I., OR D.I. PIPE

A9451

REVISIONS				
NO.	DATE	INIT		APP'D

DEPARTMENT OF WATER AND POWER
WATER SYSTEM — CITY OF LOS ANGELES

	NAME	DATE	APPROVED
DESIGNED	L. NUNO	7-91	B. WEINSTEIN JUNE '92
DRAWN	V. TOROMANIAN	11-91	
CHECKED	L. NUNO	11-91	

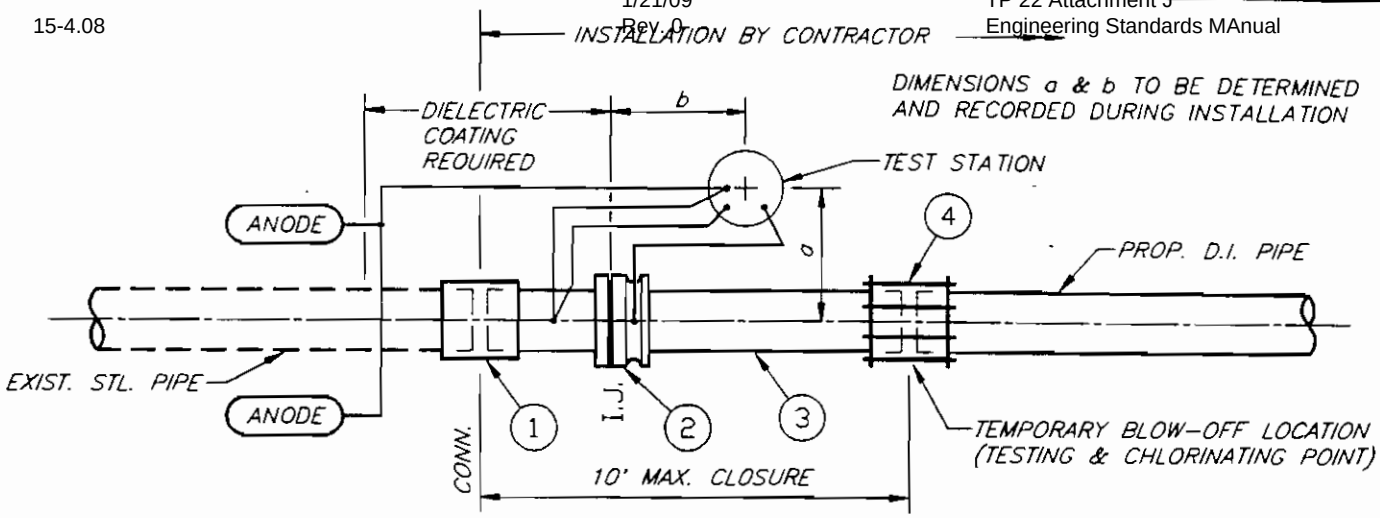

DETAIL 1 – CONNECTION TO EXISTING STEEL PIPE

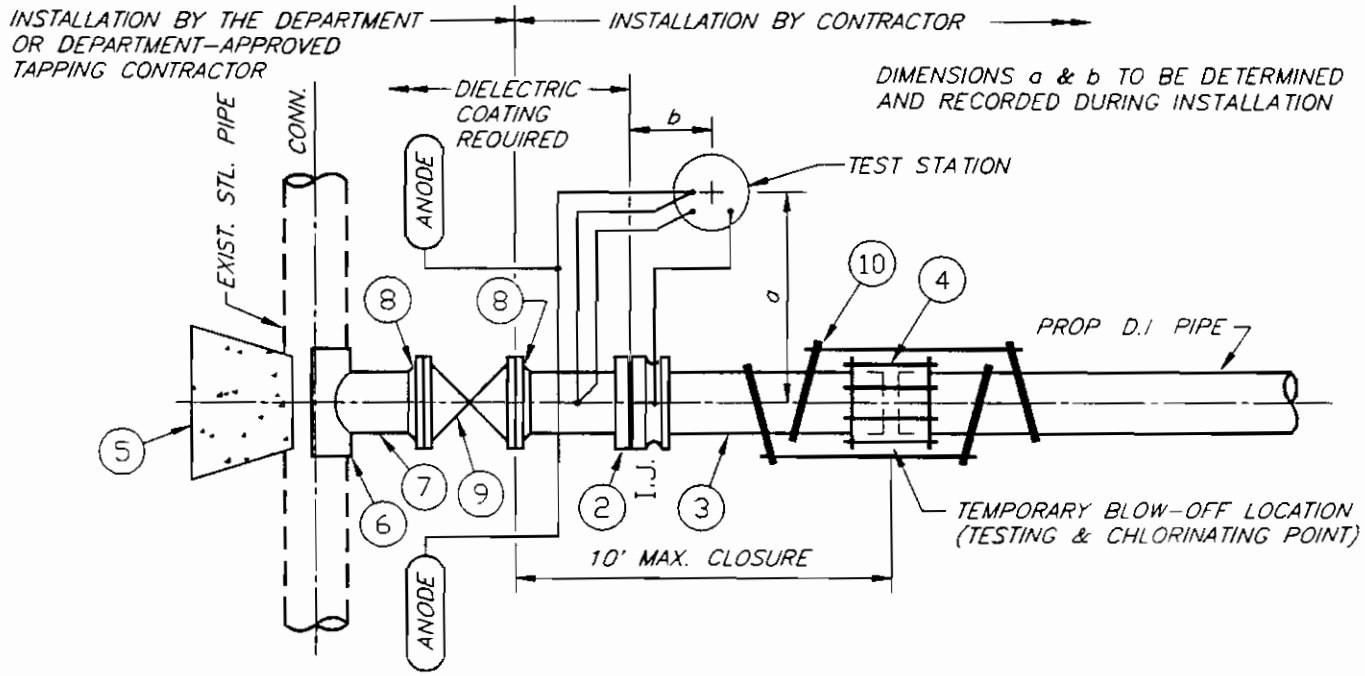

DETAIL 2 – WET-TAP CONNECTION TO EXISTING STEEL PIPE

1. STEEL BUTTSTRAP
2. PRE-ASS'D INS. FLG. TYPE I-E
3. D.I R.G. NIPPLE
4. CAST TRANS. MECH. COUPLING
5. CONCRETE THRUST BLOCK
6. STEEL WELDING PAD
7. STEEL NIPPLE
8. WELD NECK FLANGE
9. FLANGED GATE VALVE
10. SAFETY YOKES & RODS

NOTE: SEE DRAWING NO.'S A9455-1 THRU A9455-4 FOR CATHODIC PROTECTION NOTES AND DETAILS.

D.I. PIPE CONNECTIONS TO EXISTING STEEL PIPE

A9452

REVISIONS				
NO.	DATE	INIT.		APP'D

DEPARTMENT OF WATER AND POWER
WATER SYSTEM — CITY OF LOS ANGELES

	NAME	DATE	APPROVED	
DESIGNED	L. NUNO	7-91	B. WEINSTEIN	JUNE '92
DRAWN	V. TOROMANIAN	11-91		
CHECKED	L. NUNO	11-91		

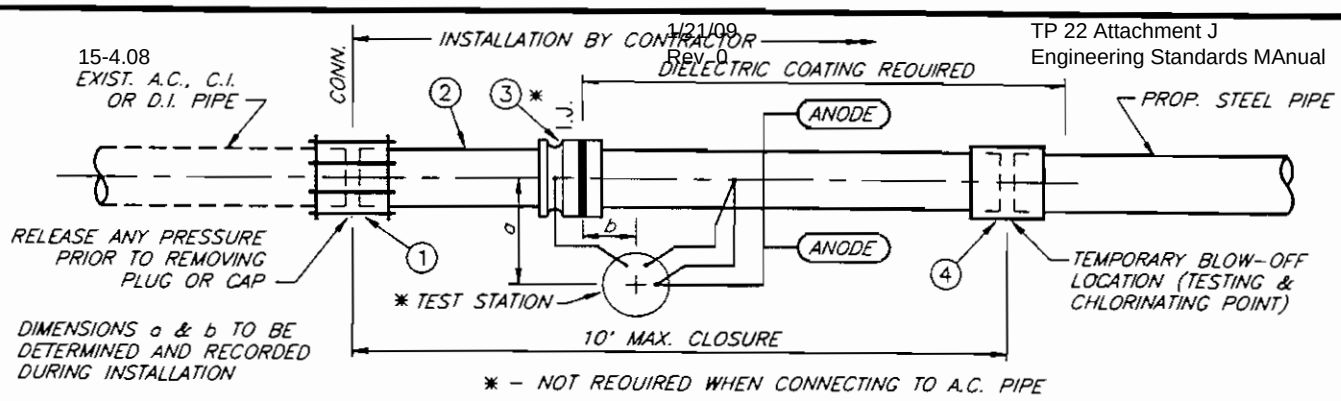

DETAIL 1 - CONNECTION TO EXISTING SPIGOT END

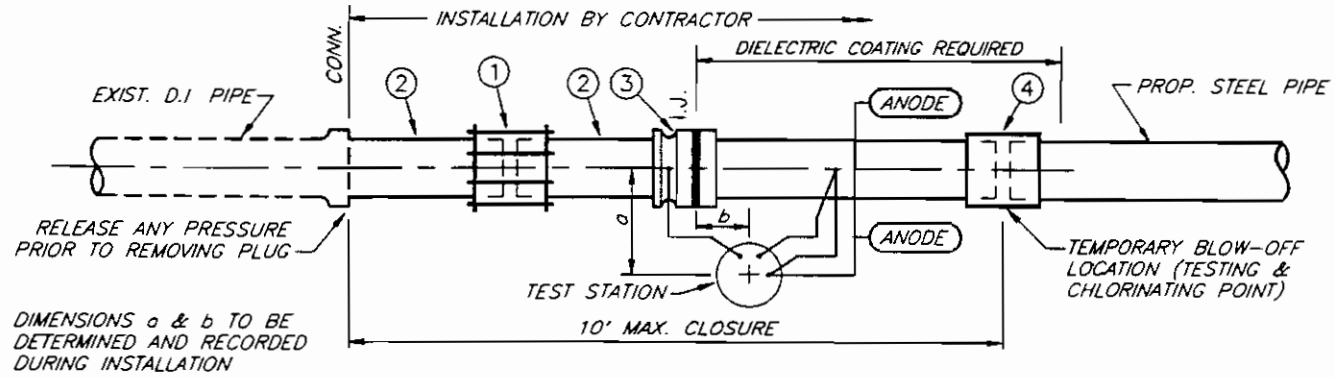

DETAIL 2 - CONNECTION TO EXISTING PUSH-ON BELL END

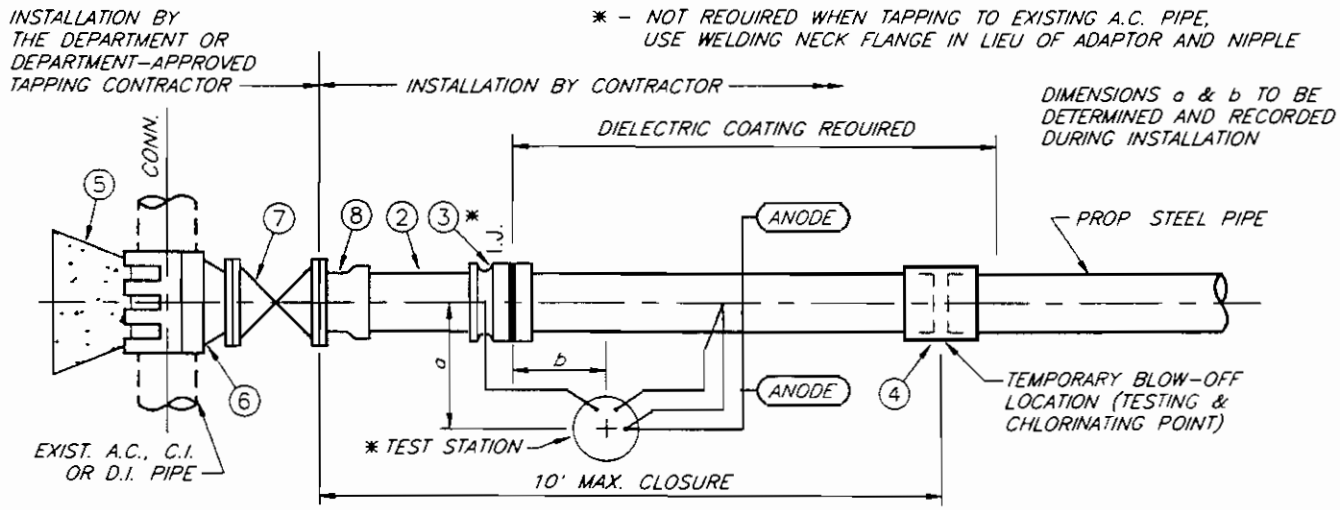

DETAIL 3 - WET-TAP CONNECTION TO EXISTING A.C., C.I. OR D.I. PIPE

1. CAST TRANS. MECH COUPLING
2. D.I. R.G. NIPPLE
3. PRE-ASS'D INS. FLG. TYPE I-E
4. STEEL BUTTSTRAP
5. CONCRETE THRUST BLOCK
6. TAPPING SLEEVE
7. FLANGED GATE VALVE
8. D.I. R.G. FLANGE/BELL ADAPTOR

NOTE: SEE DRAWING NO.'S A9455-1 THRU A9455-4 FOR CATHODIC PROTECTION NOTES AND DETAILS.

STEEL PIPE CONNECTIONS TO EXISTING A.C., C.I., OR D.I. PIPE

A9453

REVISIONS				
NO.	DATE	INIT.		APP'D

DEPARTMENT OF WATER AND POWER
WATER SYSTEM — CITY OF LOS ANGELES

	NAME	DATE	APPROVED	
DESIGNED	L. NUNO	8-91	B. WEINSTEIN	JUNE '92
DRAWN	V. TOROMANIAN	12-91		
CHECKED	L. NUNO	12-91		

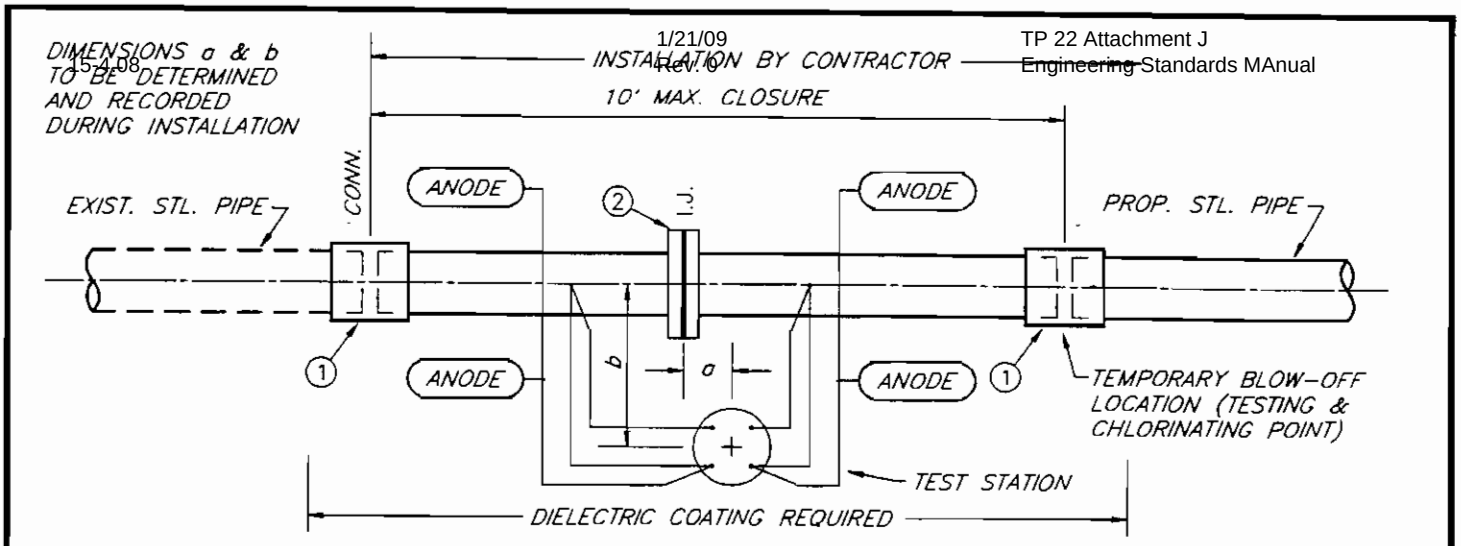

DETAIL 1 – CONNECTION TO EXISTING STEEL PIPE

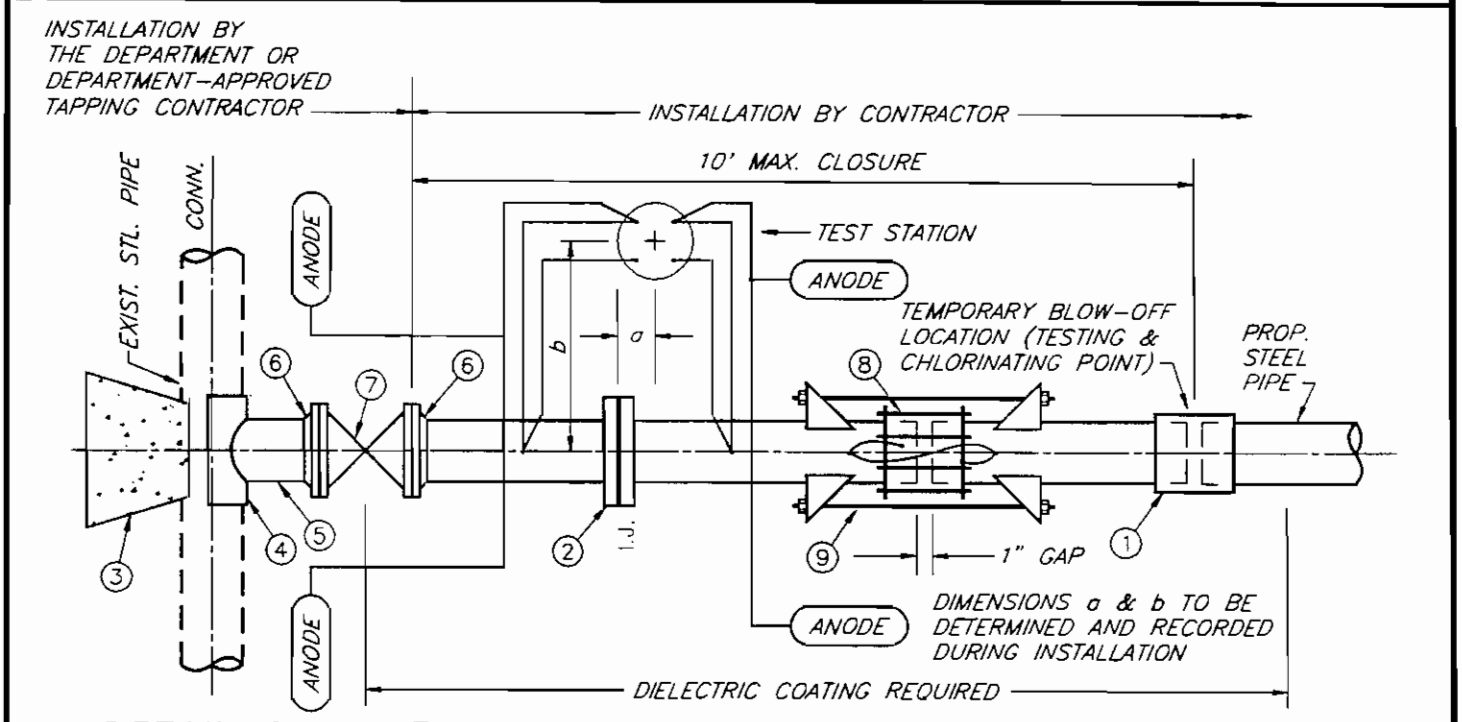

DETAIL 2 – WET-TAP CONNECTION TO EXISTING STEEL PIPE

1. STEEL BUTTSTRAP
2. PRE-ASS'D INS. FLG. TYPE II-D
3. CONCRETE THRUST BLOCK
4. STEEL WELDING PAD
5. STEEL NIPPLE
6. WELD NECK FLANGE
7. FLANGED GATE VALVE
8. STEEL MECHANICAL COUPLING (NON-INS.)
9. ANCHOR BOX ASSEMBLY

NOTE: SEE DRAWING NO.'S A9455-1 THRU A9455-4 FOR CATHODIC PROTECTION NOTES AND DETAILS.

STEEL PIPE CONNECTIONS TO EXISTING STEEL PIPE

A9454

REVISIONS				
NO.	DATE	INIT.		APP'D

DEPARTMENT OF WATER AND POWER
WATER SYSTEM — CITY OF LOS ANGELES

	NAME	DATE	APPROVED
DESIGNED	L. NUNO	8-91	B. WEINSTEIN JUNE '92
DRAWN	V. TOROMANIAN	12-91	
CHECKED	L. NUNO	12-91	

1. All steel water mains shall be placed under a galvanic cathadic protection system installed and tested by a Corrosion Engineer registered by the State of California, a Corrasion Specialist certified by the Natianal Association of Corrosian Engineers, or someane under the direct supervision of a Registered Corrosian Engineer.

2. Two-inch (2") and smaller service laterals connected to steel pipe shall be installed and coated as shawn on Standard Drawing A9477.

3. The Contractor shall protect the cathodic pratection system including, but not limited to, insulating joints, anodes, wire leads, and test stations.

4. Test stations shall be located, in order of preference, adjacent to fire hydrants, adjacent to line valves, and adjacent to insulating joints.

5. Test station locations shall be recorded.

6. Test station wire leads shall be properly identified using N, S, E, and W directions, and be capable af allowing current readings using a 0.01 ohm, 6 amp. capacity shunt installed on the terminal block.

7. Test station wire leads shall have a minimum of four feet (4') of excess wire measured from the gate cap.

8. Anodes shall be 32-lb. Daw Galvo Pack, or equal.

9. Anodes shall be installed in accordance with the following conditions:

   a. A minimum distance of two feet (2') clear from the water main.
   b. A minimum distance of five feet (5') clear from each ather.
   c. Verticolly or horizontally.
   d. On either or both sides af the water main.
   e. Watered prior to being covered with soil.
   f. Nested against, and covered with a minimum of six inches (6") of sail, and a minimum cover of three feet (3') from finished grade.

10. Bond wire shall be 8 gauge, THHN, 600V, blue solid.

11. Wire leads shall be 12 gauge, THHN, 600V, blue stranded.

12. All noninsulating mechanical cauplings connecting steel pipe to steel pipe shall be bonded across and thraugh.

13. Wires shall be connected to steel pipe wolls using a thermite welding method.

14. Connection of two (2) wires shall be done by using salderless crimp connectors. Where three (3) ar more wires are cannected, a split bolt cannector shall be used. A Direct Bury Splice Kit - 3MDBR or equal may be used far a three (3) ar four (4) wire connection.

15. All wire splices shall be tightly wrapped with a minimum of four overlapping layers of electrical plastic tape under a waterproof electrical caating.

STEEL PIPE CORROSION MITIGATION NOTES AND DETAILS

A9455-1

REVISIONS				
NO	DATE	INIT		APP'D

DEPARTMENT OF WATER AND POWER
WATER SYSTEM — CITY OF LOS ANGELES

	NAME	DATE	APPROVED
DESIGNED	L. NUNO	2-92	B. WEINSTEIN JUNE '92
DRAWN	V. TOROMANIAN	2-92	
CHECKED	L. NUNO	2-92	

16. Wire leads shall be taped together every three feet (3') to form a wiring harness. The harness shall be strategically located to minimize possible future damage to the wire leads. Minimum depth must equal the pipe cover.

17. The joints of cement-mortar coated and enamel/dielectric undercoated steel main shall be coated with a dielectric coating under a minimum one-inch (1") thick cement-mortar coating.

18. The Contractor shall coat all bare portions of steel pipe and appurtenances with a dielectric coating.

19. The dielectric coating on welded joints shall overlap the original coating by a minimum of two inches (2") on each end.

20. Insulating joints shall have the dielectric coating extended a minimum of two (2) pipe diameters onto adjacent non-steel pipe.

21. Fittings that connect steel pipe to A.C. pipe shall be fully coated with a dielectric coating.

22. All field enameling or wrapping shall be tested by the Contractor using an electrical holiday detector in accordance with AWWA C203 Section 2.14.12 for enameling and AWWA C209 Section 4.4 for wrapping. Any flaws or holidays found shall be repaired by the Contractor in accordance with AWWA C203 Section 2.15 for enameling and AWWA C209 Section 4.4 for wrapping.

23. The cement-mortar coating reinforcing wire shall:

    a. Not come in contact with the steel pipe wall.
    b. Overlap the original cement-mortar coating a minimum of two inches (2") on each edge.

24. The cement-mortar coating on welded joints shall overlap the cement-mortar coating reinforcing wire by a minimum of two inches (2") on each end.

25. As an alternative, welded steel joints and mechanical couplings on welded steel pipe may be protected with "Raychem Heat Shrink Joint Protection Sleeve GAP 7" and "Raychem Thermofit Dresser Sleeve", respectively, or equal.

26. The following tests shall be performed and certified by the Corrosion Engineer:

    a. Test soil resistivity at 500 foot intervals, all street intersections and cul-de-sacs, and both sides of cut and fill areas.
    b. Test the cathodic protection system for pipe-to-soil values and current output at all cathodic protection stations, and submit a report including the data to the Department.
    c. Test the cathodic protection system to ensure a minimum theoretical life of 75 years (add as many anodes as necessary to conform)
    d. Test all insulating joints to ensure electrical isolation.
    e. Test all service laterals to ensure no shorts are present.

27. The Corrosion Engineer shall prepare and submit for Department approval an accurate as-constructed record of the cathodic protection system installed. As-constructed record shall have all test stations and anodes located and referenced to the centerline of the main and the insulating joints.

STEEL PIPE CORROSION MITIGATION NOTES AND DETAILS (CONT'D)

REVISIONS				
NO.	DATE	INIT		APP'D

DEPARTMENT OF WATER AND POWER
WATER SYSTEM — CITY OF LOS ANGELES

	NAME	DATE	APPROVED
DESIGNED	L. NUNO	2-92	B. WEINSTEIN JUNE '92
DRAWN	V. TOROMANIAN	2-92	
CHECKED	L. NUNO	2-92	

A9455-2

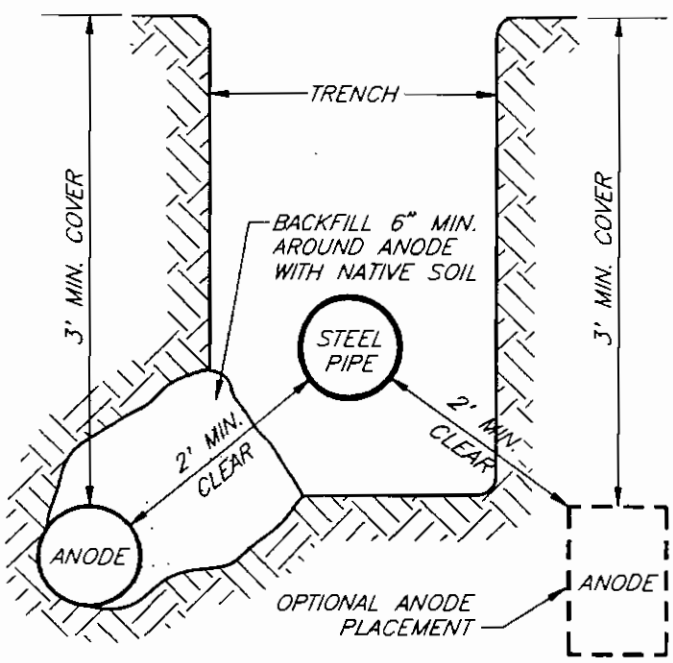

ANODE PLACEMENT PROFILE

DETAIL NO. 1

NO SCALE

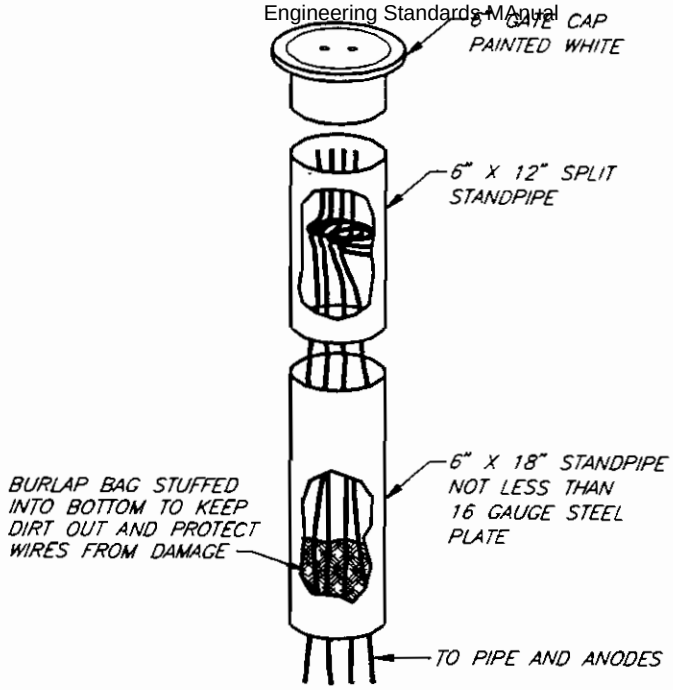

TEST STATION ASSEMBLY

DETAIL NO. 2

NO SCALE

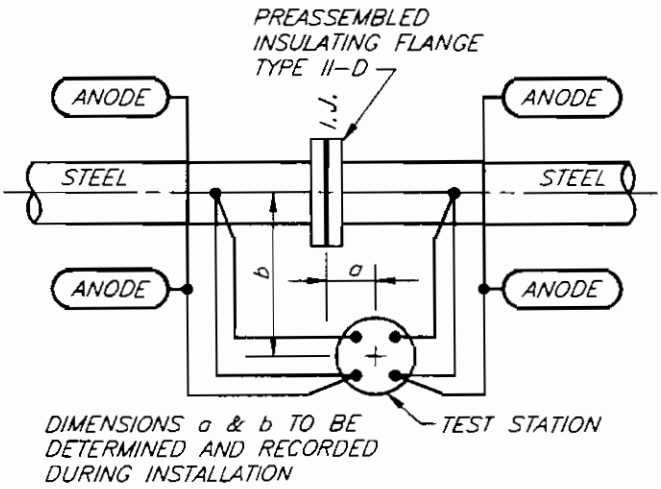

STEEL PIPE – STEEL PIPE
ANODE AND TEST STATION SCHEMATIC

DETAIL NO. 3

NO SCALE

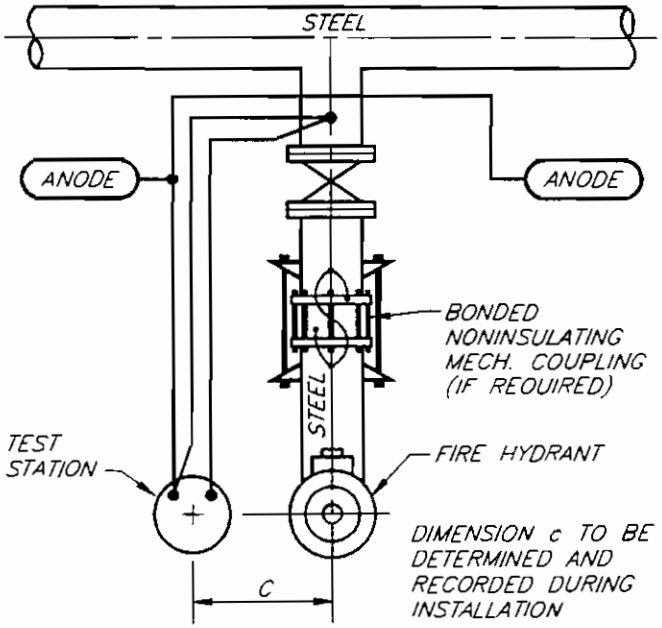

FIRE HYDRANT
ANODE AND TEST STATION SCHEMATIC

DETAIL NO. 4

NO SCALE

STEEL PIPE CORROSION MITIGATION NOTES AND DETAILS (CONT'D)

A9455-3

REVISIONS				
NO	DATE	INIT.		APP'D

DEPARTMENT OF WATER AND POWER
WATER SYSTEM — CITY OF LOS ANGELES

	NAME	DATE	APPROVED	
DESIGNED	L. NUNO	2-92	B. WEINSTEIN	JUNE '92
DRAWN	V. TOROMANIAN	2-92		
CHECKED	L. NUNO	2-92		

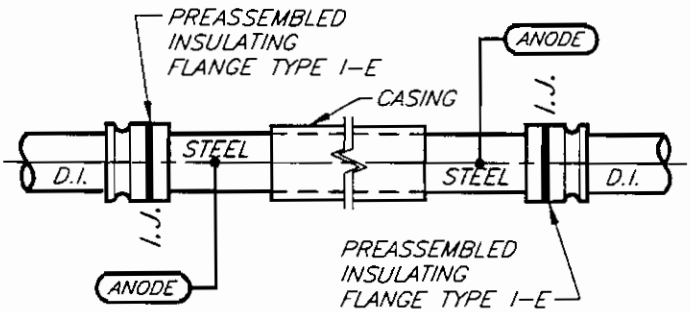

D.I. PIPE–STEEL PIPE IN CASING–D.I PIPE
DIRECT CONNECTION SCHEMATIC

DETAIL NO. 5

NO SCALE

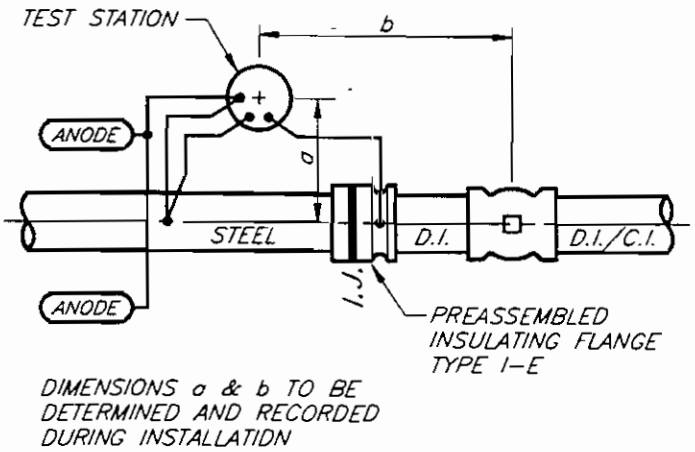

STEEL PIPE – DUCTILE IRON PIPE
ANODE AND TEST STATION SCHEMATIC

DETAIL NO. 6

NO SCALE

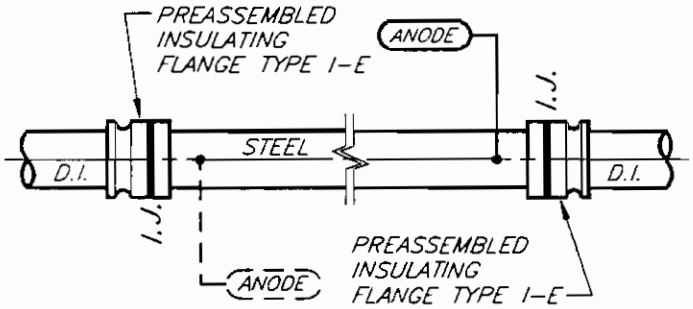

DIRECT CONNECTION
1 ANODE < 50'
2 ANODES 50' ≤ 100'

D.I. PIPE – STEEL PIPE – D.I. PIPE
DIRECT CONNECTION SCHEMATIC

DETAIL NO. 7

NO SCALE

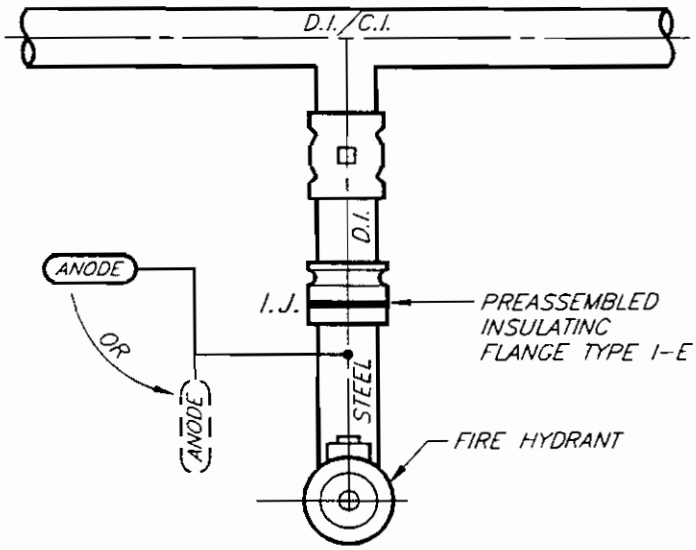

DIRECT CONNECTION
1 ANODE < 50'
2 ANODES 50' ≤ 100'

STEEL F.H. LATERAL – D.I. PIPE
DIRECT CONNECTION SCHEMATIC

DETAIL NO. 8

NO SCALE

STEEL PIPE CORROSION MITIGATION NOTES AND DETAILS (CONT'D)

A9455-4

REVISIONS				
NO.	DATE	INIT		APP'D

DEPARTMENT OF WATER AND POWER
WATER SYSTEM — CITY OF LOS ANGELES

	NAME	DATE	APPROVED
DESIGNED	L. NUNO	2-92	B. WEINSTEIN JUNE '92
DRAWN	V. TOROMANIAN	2-92	
CHECKED	L. NUNO	2-92	

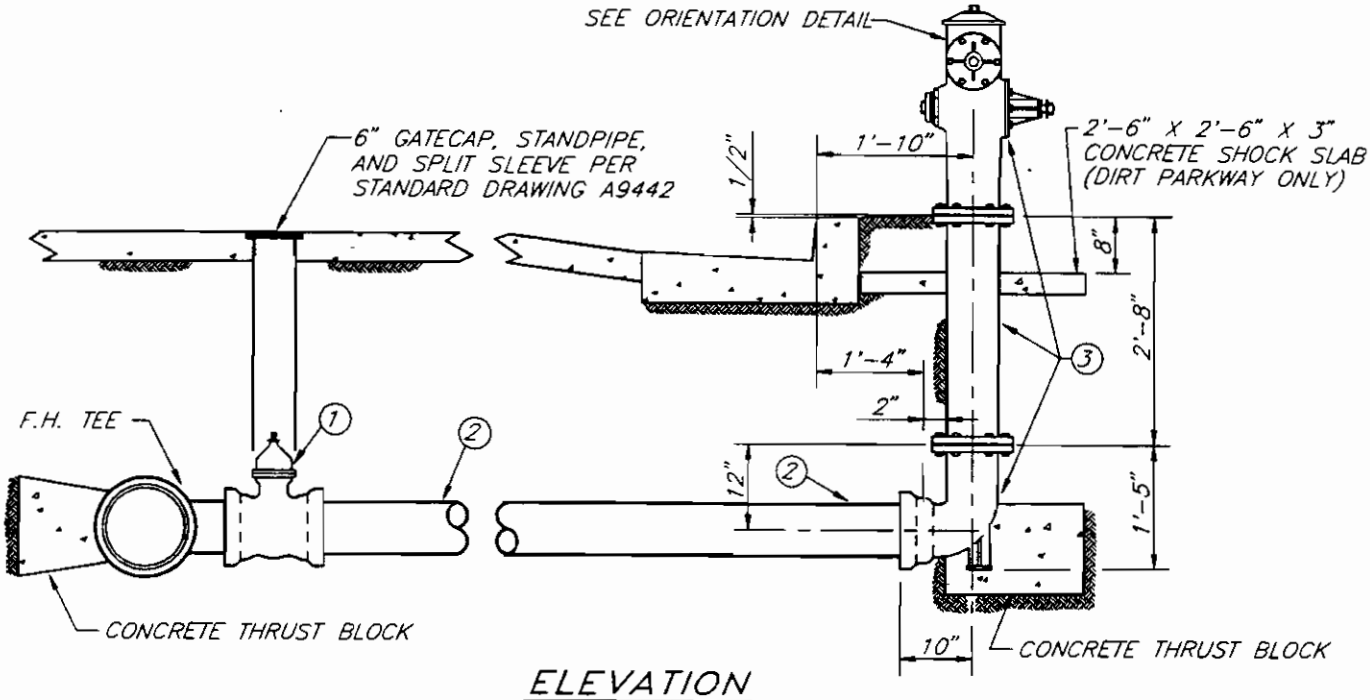

ELEVATION

NOTES:

1. THIS FIRE HYDRANT INSTALLATION IS GENERALLY USED WHEN CONNECTING TO A PROPOSED DUCTILE IRON MAIN EXTENSION.
2. ALL PUSH-ON JOINTS SHALL BE RESTRAINED WITH JOINT-LOCK GASKETS.
3. * LENGTH OF LATERAL IS DEFINED AS THE DISTANCE MEASURED ALONG THE LATERAL FROM THE MAIN TO THE CURB FACE OR TO THE FIRE HYDRANT IN THE ABSENCE OF CURB.
4. SEE STANDARD DRAWINGS A9459 AND A9460 FOR PLACEMENT OF FIRE HYDRANTS IN THE ABSENCE OF A CURB.
5. SEE STANDARD DRAWING A9461 FOR PLACEMENT OF FIRE HYDRANTS IN THE ABSENCE OF A LEVEL PAD.

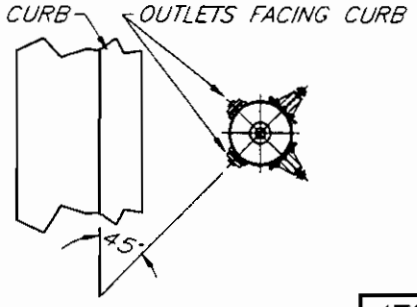

ORIENTATION DETAIL

ITEM	QTY.	MATERIAL DESCRIPTION
1	1	6" X 200# C.I R.G. GATE VALVE
2	*	6" X 0.31" D.I. R.G. PIPE AWWA
3	1	2-1/2" X 4" (OR 4" X 4") DOUBLE-OUTLET F.H. ASSEMBLY

DOUBLE-OUTLET FIRE HYDRANT INSTALLATION (D.I. PIPE)

A9456-1

REVISIONS				
NO.	DATE	INIT		APP'D

DEPARTMENT OF WATER AND POWER
WATER SYSTEM — CITY OF LOS ANGELES

	NAME	DATE	APPROVED	
DESIGNED	D. S. WALL	4-92	B WEINSTEIN	JUNE '92
DRAWN	D. S. WALL	4-92		
CHECKED	C. HAMVAS	4-92		

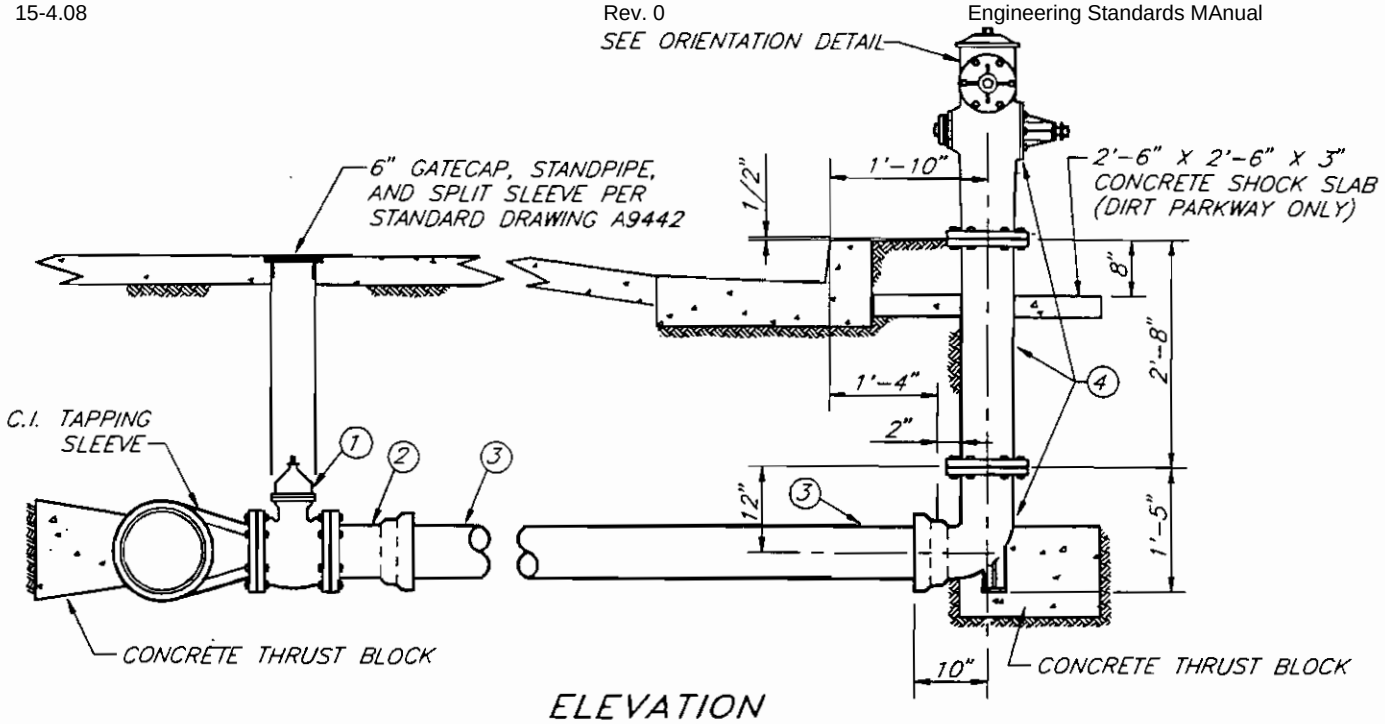

ELEVATION

NOTES:

1. THIS FIRE HYDRANT INSTALLATION IS GENERALLY USED WHEN CONNECTING TO AN EXISTING D.I./C.I. WATER MAIN.
2. ALL PUSH-ON JOINTS SHALL BE RESTRAINED WITH JOINT-LOCK GASKETS.
3. * LENGTH OF LATERAL IS DEFINED AS THE DISTANCE MEASURED ALONG THE LATERAL FROM THE MAIN TO THE CURB FACE OR TO THE FIRE HYDRANT IN THE ABSENCE OF CURB.
4. SEE STANDARD DRAWINGS A9459 AND A9460 FOR PLACEMENT OF FIRE HYDRANTS IN THE ABSENCE OF A CURB.
5. SEE STANDARD DRAWING A9461 FOR PLACEMENT OF FIRE HYDRANTS IN THE ABSENCE OF A LEVEL PAD.

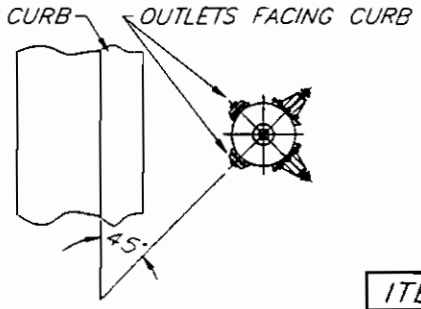

ORIENTATION DETAIL

ITEM	QTY.	MATERIAL DESCRIPTION
1	1	6" X 200# C.I. FLANGED GATE VALVE
2	1	6" D.I. R.G. FLANGE/BELL ADAPTOR AWWA
3	*	6" X 0.31" D.I. R.G. PIPE AWWA
4	1	2-1/2" X 4" (OR 4" X 4") DOUBLE-OUTLET F.H. ASSEMBLY

DOUBLE-OUTLET FIRE HYDRANT INSTALLATION (D.I., C.I. PIPE)

A9456-2

REVISIONS

NO	DATE	INIT		APP'D

DEPARTMENT OF WATER AND POWER
WATER SYSTEM — CITY OF LOS ANGELES

	NAME	DATE	APPROVED	
DESIGNED	D. S. WALL	4-92	B. WEINSTEIN	JUNE '92
DRAWN	D. S. WALL	4-92		
CHECKED	C. HAMVAS	4-92		

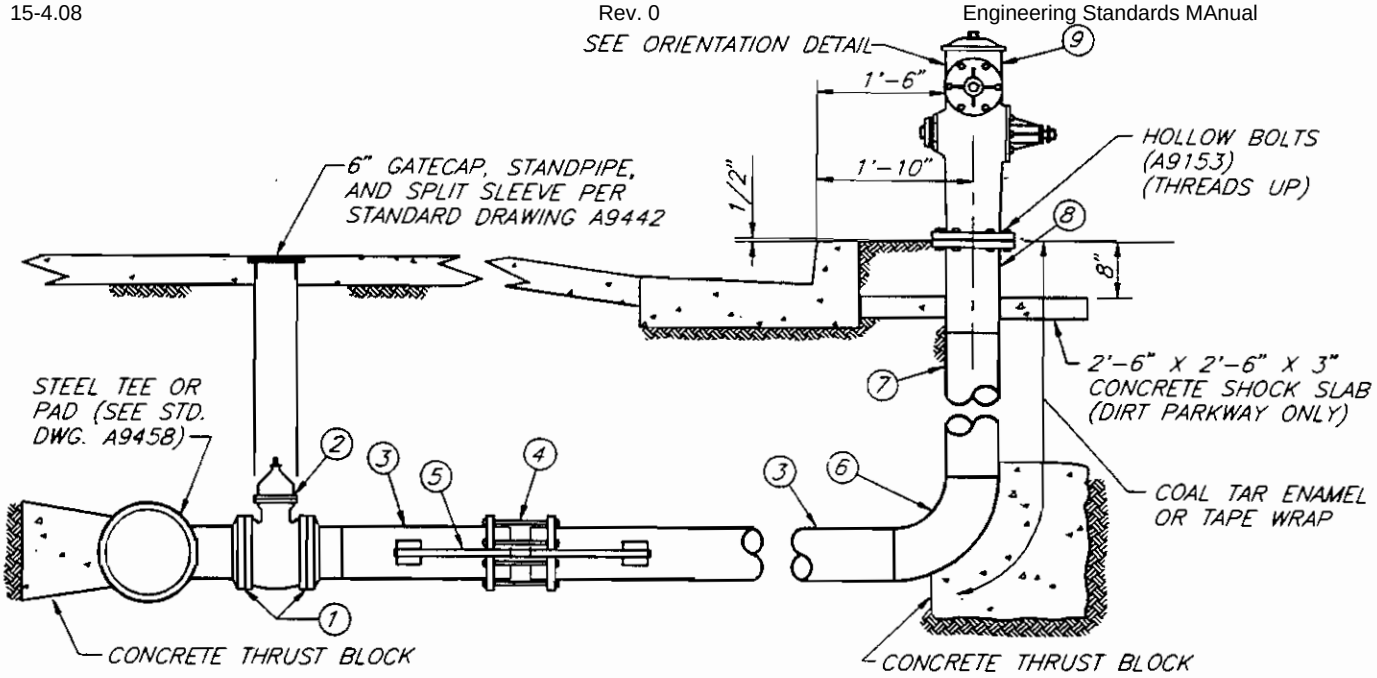

ELEVATION

NOTES:

1. THIS FIRE HYDRANT INSTALLATION IS GENERALLY USED WHEN CONNECTING TO AN EXISTING OR PROPOSED STEEL WATER MAIN WITH A MAXIMUM STATIC PRESSURE OF 200 PSI OR LESS.
2. PROVIDE CATHODIC PROTECTION IN ACCORDANCE WITH LATEST DWPWS STANDARDS.
3. * LENGTH OF LATERAL IS DEFINED AS THE DISTANCE MEASURED ALONG THE LATERAL FROM THE MAIN TO THE CURB FACE OR TO THE FIRE HYDRANT IN THE ABSENCE OF CURB.
4. SEE STANDARD DRAWINGS A9459 AND A9460 FOR PLACEMENT OF FIRE HYDRANTS IN THE ABSENCE OF A CURB.
5. SEE STANDARD DRAWING A9461 FOR PLACEMENT OF FIRE HYDRANTS IN THE ABSENCE OF A LEVEL PAD.

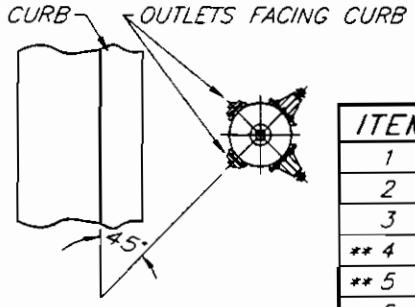

ORIENTATION DETAIL

ITEM	QTY.	MATERIAL DESCRIPTION
1	2	6" X 150# STEEL WELD NECK FLANGE
2	1	6" X 200# C.I. FLANGED GATE VALVE
3	*	6-5/8" O.D. X 1/4" EN. UC., C.L. & C., S.J. WLD STL. PIPE
** 4	1	6" STEEL MECHANICAL COUPLING (NON-INSULATING)
** 5	1	ANCHOR BOX ASSEMBLY PER STD. DWG. A9194
6	1	6" X 90° LONG RADIUS STEEL WELD ELBOW
7	3'±	6-5/8" O.D. X 1/4" EN. UC., C.L. & C., S.J, WLD STL. PIPE
8	1	6" F.H. STEEL WELD NECK FLANGE (6 11/16" HOLES EQUALLY SPACED ON 9.375" B.C.)
9	1	2-1/2" X 4" (OR 4" X 4") DOUBLE-OUTLET F.H TOP

** REQUIRED ONLY IF LENGTH OF LATERAL EXCEEDS 10'.

DOUBLE-OUTLET FIRE HYDRANT INSTALLATION (STEEL PIPE)

A9456-3

REVISIONS				
NO	DATE	INIT		APP'D

DEPARTMENT OF WATER AND POWER
WATER SYSTEM — CITY OF LOS ANGELES

	NAME	DATE	APPROVED
DESIGNED	D. S. WALL	4-92	B. WEINSTEIN JUNE '92
DRAWN	D. S. WALL	4-92	
CHECKED	C. HAMVAS	4-92	

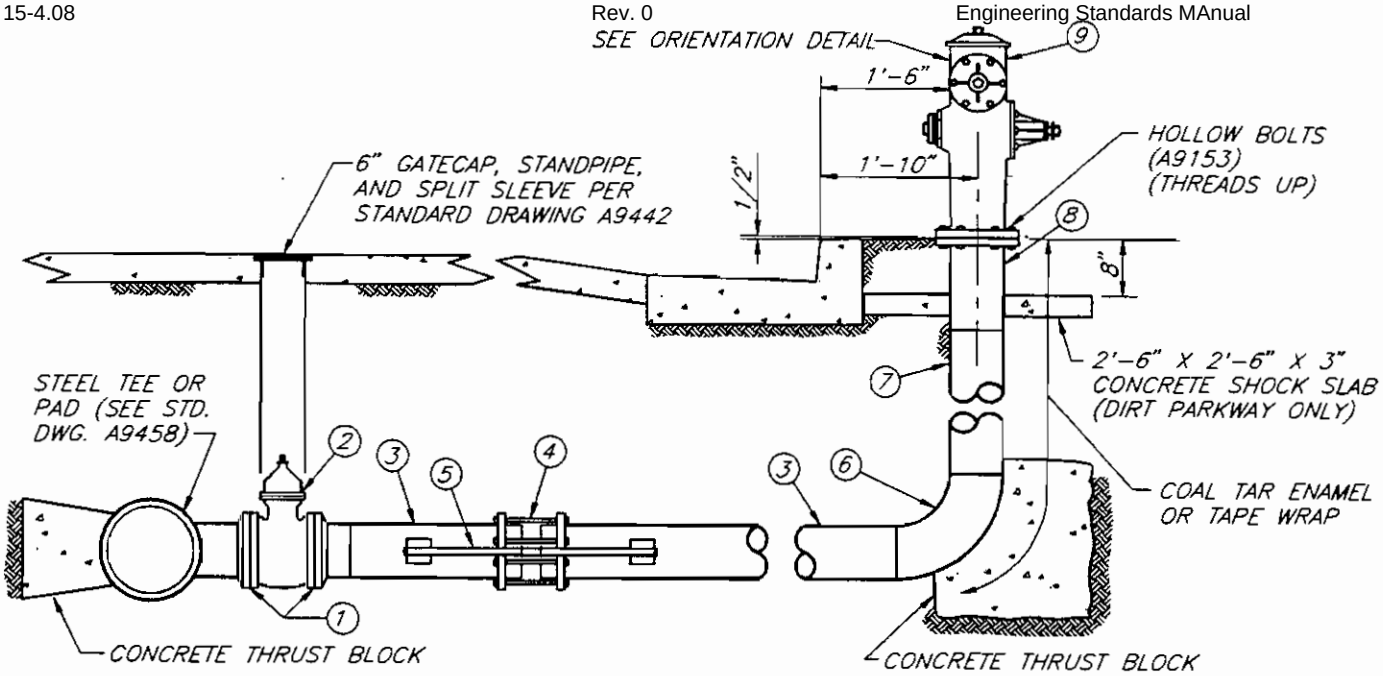

ELEVATION

NOTES:

1. THIS FIRE HYDRANT INSTALLATION IS GENERALLY USED WHEN CONNECTING TO AN EXISTING OR PROPOSED STEEL WATER MAIN WITH A MAXIMUM STATIC PRESSURE GREATER THAN 200 PSI BUT EQUAL TO OR LESS THAN 210 PSI.
2. PROVIDE CATHODIC PROTECTION IN ACCORDANCE WITH LATEST DWPWS STANDARDS.
3. * LENGTH OF LATERAL IS DEFINED AS THE DISTANCE MEASURED ALONG THE LATERAL FROM THE MAIN TO THE CURB FACE OR TO THE FIRE HYDRANT IN THE ABSENCE OF CURB.
4. SEE STANDARD DRAWINGS A9459 AND A9460 FOR PLACEMENT OF FIRE HYDRANTS IN THE ABSENCE OF A CURB.
5. SEE STANDARD DRAWING A9461 FOR PLACEMENT OF FIRE HYDRANTS IN THE ABSENCE OF A LEVEL PAD.

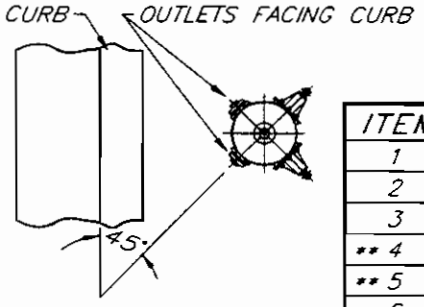

ORIENTATION DETAIL

ITEM	QTY.	MATERIAL DESCRIPTION
1	2	6" X 300# STEEL WELD NECK FLANGE
2	1	6" X 250# C.I. FLANGED GATE VALVE
3	*	6-5/8" O.D. X 1/4" EN. UC., C.L. & C., S.J. WLD STL. PIPE
** 4	1	6" STEEL MECHANICAL COUPLING (NON-INSULATING)
** 5	1	ANCHOR BOX ASSEMBLY PER STD DWG. A9194
6	1	6" X 90° LONG RADIUS STEEL WELD ELBOW
7	3'±	6-5/8" O.D. X 1/4" EN. UC, C.L. & C., S.J., WLD STL. PIPE
8	1	6" F.H. STEEL WELD NECK FLANGE (6 11/16" HOLES EQUALLY SPACED ON 9.375" B.C.)
9	1	2-1/2" X 4" (OR 4" X 4") DOUBLE-OUTLET F.H. TOP

** REQUIRED ONLY IF LENGTH OF LATERAL EXCEEDS 10'.

DOUBLE-OUTLET FIRE HYDRANT INSTALLATION (STEEL PIPE)

A9456-4

REVISIONS

NO.	DATE	INIT		APP'D

DEPARTMENT OF WATER AND POWER
WATER SYSTEM — CITY OF LOS ANGELES

	NAME	DATE	APPROVED	
DESIGNED	D. S. WALL	4-92	B. WEINSTEIN	JUNE '92
DRAWN	D. S. WALL	4-92		
CHECKED	C. HAMVAS	4-92		

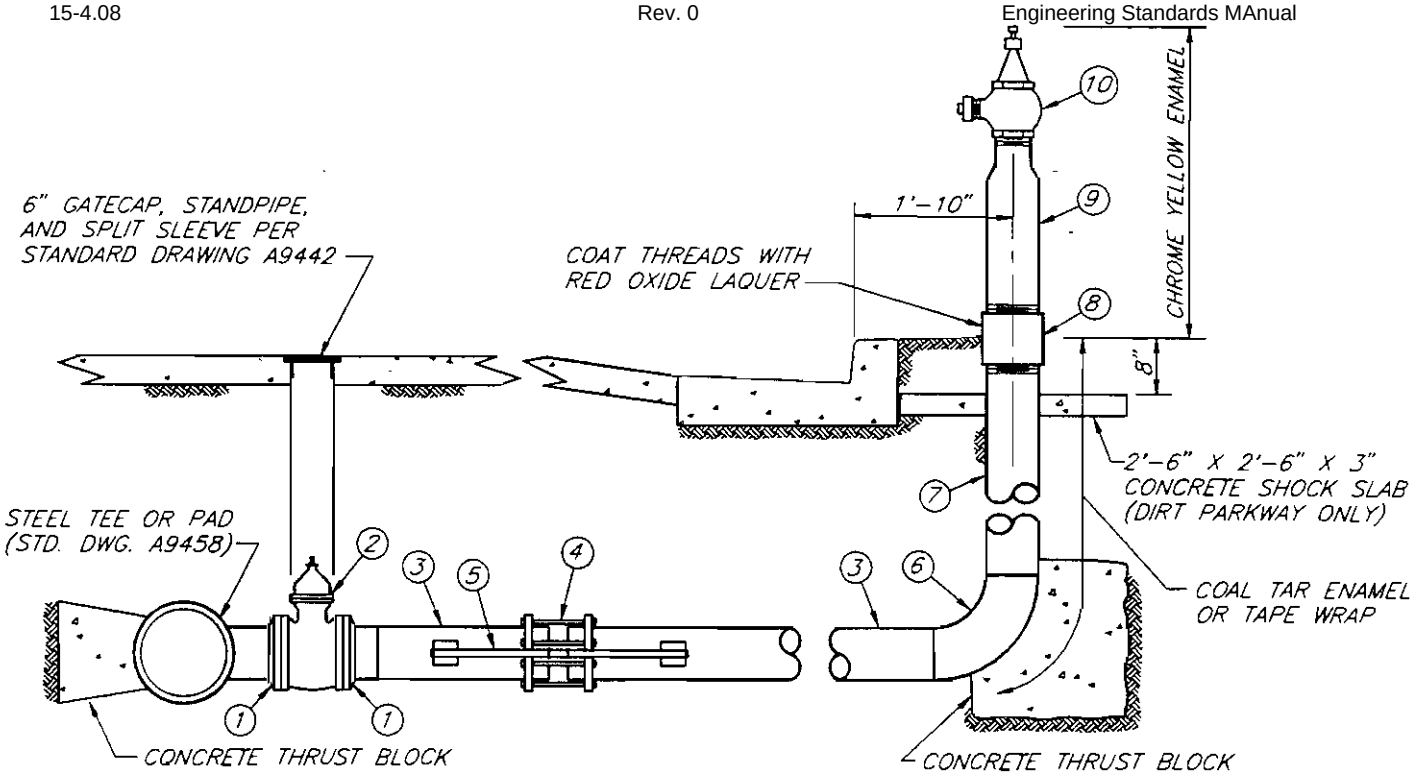

ELEVATION

NOTES:

1. THIS FIRE HYDRANT INSTALLATION IS GENERALLY USED WHEN CONNECTING TO AN EXISTING OR PROPOSED STEEL WATER MAIN WITH A MAXIMUM STATIC PRESSURE GREATER THAN 210 PSI BUT EQUAL TO OR LESS THAN 250 PSI.
2. PROVIDE CATHODIC PROTECTION IN ACCORDANCE WITH LATEST DWPWS STANDARDS
3. * LENGTH OF LATERAL IS DEFINED AS THE DISTANCE MEASURED ALONG THE LATERAL FROM THE MAIN TO THE CURB FACE OR TO THE FIRE HYDRANT IN THE ABSENCE OF CURB.
4. SEE STANDARD DRAWINGS A9459 AND A9460 FOR PLACEMENT OF FIRE HYDRANTS IN THE ABSENCE OF A CURB.
5. SEE STANDARD DRAWING A9461 FOR PLACEMENT OF FIRE HYDRANTS IN THE ABSENCE OF A LEVEL PAD

ITEM	QTY.	MATERIAL DESCRIPTION
1	2	6" X 300# STEEL WELD NECK FLANGE
2	1	6" X 250# C.I FLANGED GATE VALVE
3	*	6-5/8" O.D. X 1/4" EN. UC., C.L. & C., S.J. WELDED STEEL PIPE
** 4	1	6" STEEL MECHANICAL COUPLING (NON-INSULATING)
** 5	1	ANCHOR BOX ASSEMBLY PER STD. DWG. A9194
6	1	6" X 90° LONG RADIUS STEEL WELD ELBOW
7	1	6-5/8" O.D X 1/4" X 38" EN. UC., C.L & C., STEEL WELD THREADED NIPPLE
8	1	6" STANDARD GALVINIZED STEEL COUPLING
9	1	6" X 4" X 24" STEEL SWAGED NIPPLE
10	1	4" X 2-1/2" FIRE HYDRANT ANGLE VALVE

** REQUIRED ONLY IF LENGTH OF LATERAL EXCEEDS 10'.

2-1/2" BUILT-UP FIRE HYDRANT INSTALLATION

A9457-1

REVISIONS				
NO	DATE	INIT.		APP'D

DEPARTMENT OF WATER AND POWER
WATER SYSTEM — CITY OF LOS ANGELES

	NAME	DATE	APPROVED	
DESIGNED	D. S. WALL	4-92	B. WEINSTEIN	JUNE '92
DRAWN	D. S. WALL	4-92		
CHECKED	C. HAMVAS	4-92		

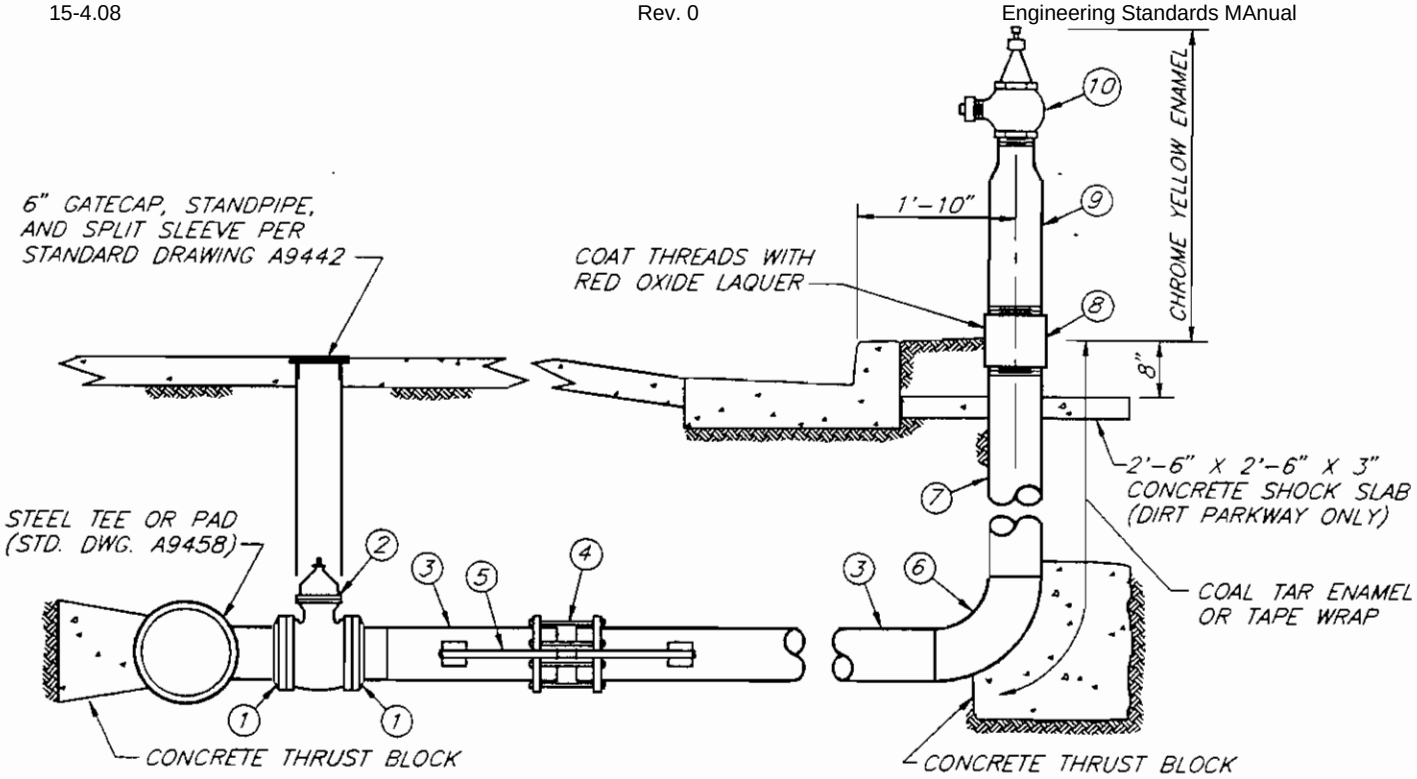

ELEVATION

NOTES:

1. THIS FIRE HYDRANT INSTALLATION IS GENERALLY USED WHEN CONNECTING TO AN EXISTING OR PROPOSED STEEL WATER MAIN WITH A MAXIMUM STATIC PRESSURE GREATER THAN 250 PSI
2. PROVIDE CATHODIC PROTECTION IN ACCORDANCE WITH LATEST DWPWS STANDARDS
3. * LENGTH OF LATERAL IS DEFINED AS THE DISTANCE MEASURED ALONG THE LATERAL FROM THE MAIN TO THE CURB FACE OR TO THE FIRE HYDRANT IN THE ABSENCE OF CURB.
4. SEE STANDARD DRAWINGS A9459 AND A9460 FOR PLACEMENT OF FIRE HYDRANTS IN THE ABSENCE OF A CURB.
5. SEE STANDARD DRAWING A9461 FOR PLACEMENT OF FIRE HYDRANTS IN THE ABSENCE OF A LEVEL PAD

ITEM	QTY.	MATERIAL DESCRIPTION
1	2	6" X 300# STEEL WELD NECK FLANGE
2	1	6" X 350# C.I FLANGED GATE VALVE
3	*	6-5/8" O.D. X 1/4" EN. UC., C.L. & C., S.J. WELDED STEEL PIPE
** 4	1	6" STEEL MECHANICAL COUPLING (NON-INSULATING)
** 5	1	ANCHOR BOX ASSEMBLY PER STD. DWG. A9194
6	1	6" X 90° LONG RADIUS STEEL WELD ELBOW
7	1	6-5/8" O.D. X 1/4" X 38" EN. UC., C.L & C, STEEL WELD THREADED NIPPLE
8	1	6" STANDARD GALVINIZED STEEL COUPLING
9	1	6" X 4" X 24" STEEL SWAGED NIPPLE
10	1	4" X 2-1/2" FIRE HYDRANT ANGLE VALVE

** REQUIRED ONLY IF LENGTH OF LATERAL EXCEEDS 10'.

2-1/2" BUILT-UP FIRE HYDRANT INSTALLATION

A9457-2

REVISIONS				
NO.	DATE	INIT		APP'D

DEPARTMENT OF WATER AND POWER
WATER SYSTEM — CITY OF LOS ANGELES

	NAME	DATE	APPROVED	
DESIGNED	D. S. WALL	4-92	B. WEINSTEIN	JUNE '92
DRAWN	D. S. WALL	4-92		
CHECKED	C HAMVAS	4-92		

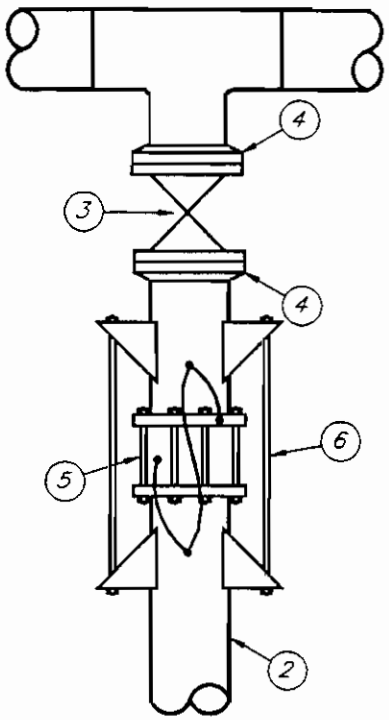

ALL MAIN SIZES

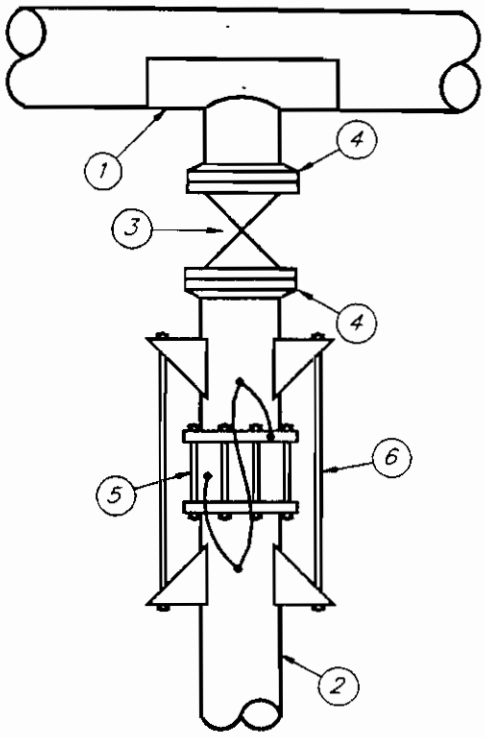

8" MAIN OR LARGER

ITEM	QTY.	MATERIAL DESCRIPTION
1	1	12" X 12" WELD PAD
2	–	6-5/8" O.D. X 1/4" EN. UC., C.L. & C., S.J., WLD STL. PIPE
3	1	6" C.I. FLANGED GATE VALVE
4	2	6" STEEL WELD NECK FLANGE
* 5	1	6" STEEL MECHANICAL COUPLING (NON-INSULATING)
* 6	1	ANCHOR BOX ASSEMBLY PER STD. DWG. A9194

* REQUIRED ONLY IF LENGTH OF LATERAL EXCEEDS 10'.

FIRE HYDRANT CONNECTION TO STEEL PIPE

A9458

NO	DATE	INIT.	REVISIONS	APP'D

DEPARTMENT OF WATER AND POWER
WATER SYSTEM — CITY OF LOS ANGELES

	NAME	DATE	APPROVED
DESIGNED	D. S. WALL	4-92	B. WEINSTEIN BW JUNE '92
DRAWN	D. S. WALL	4-92	
CHECKED	C. HAMVAS	4-92	

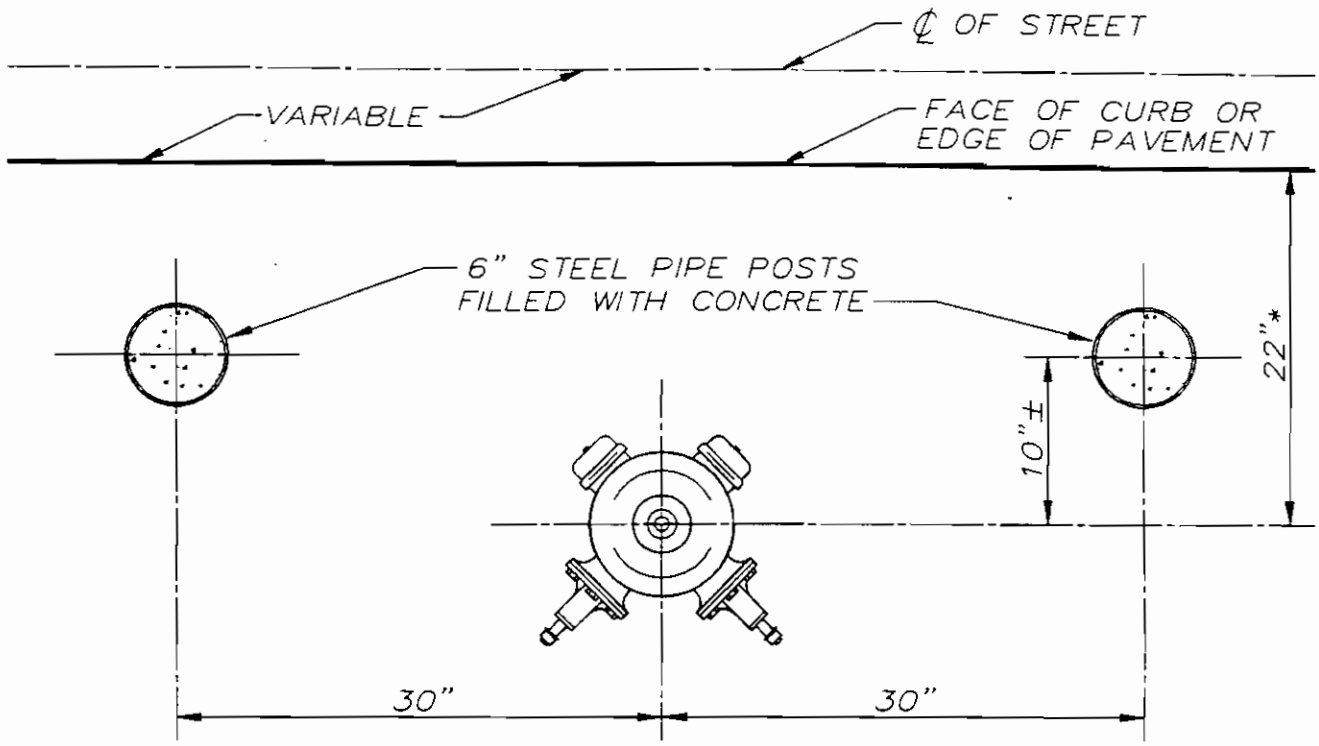

PLAN
N.T.S.

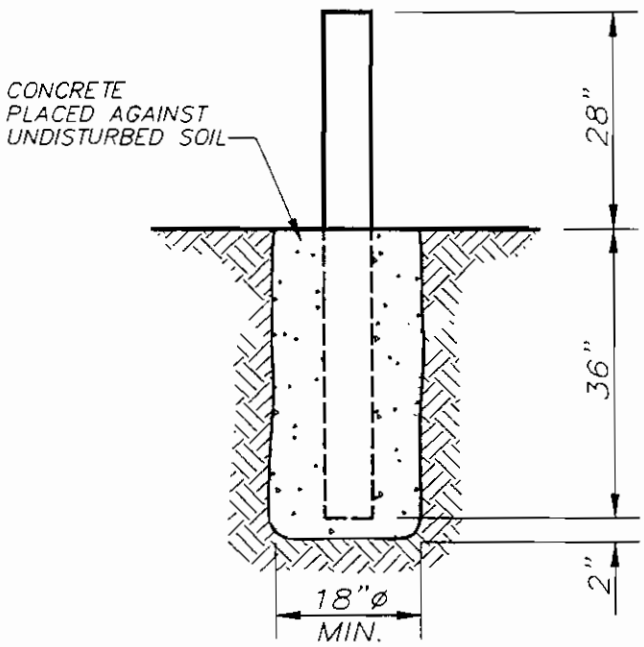

POST INSTALLATION
N.T.S.

NOTES:

1. PIPE SHALL CONFORM TO ASTM A 53, TYPE E, GRADE B, BLACK, SCHEDULE 40, PLAIN END.
2. APPLY A MINIMUM OF TWO COATS EACH OF RED OXIDE PRIMER AND CHROME YELLOW ENAMEL PAINT (FEDERAL SPEC. TT-C595, COLOR NO 13538).
3. CONCRETE SHALL BE CLASS 500-C-2500 IN ACCORDANCE WITH "STANDARD SPECIFICATIONS FOR PUBLIC WORKS CONSTRUCTION" LATEST EDITION, SUBSECTION 201-1.1.2.
4. * DISTANCE OF FIRE HYDRANT FROM FACE OF CURB OR EDGE OF PAVEMENT MAY BE GREATER DUE TO UNUSUAL CONDITIONS

LOS ANGELES CITY FIRE DEPARTMENT
APPROVED CR Gatti 7-23-92

2-POST FIRE HYDRANT GUARD

A9459

REVISIONS				
NO.	DATE	INIT		APP'D

DEPARTMENT OF WATER AND POWER
WATER SYSTEM — CITY OF LOS ANGELES

	NAME	DATE	APPROVED	
DESIGNED	L. NUNO	10-91	B. WEINSTEIN BW	JUNE '92
DRAWN	V. TOROMANIAN	10-91		
CHECKED	L. NUNO	10-91		

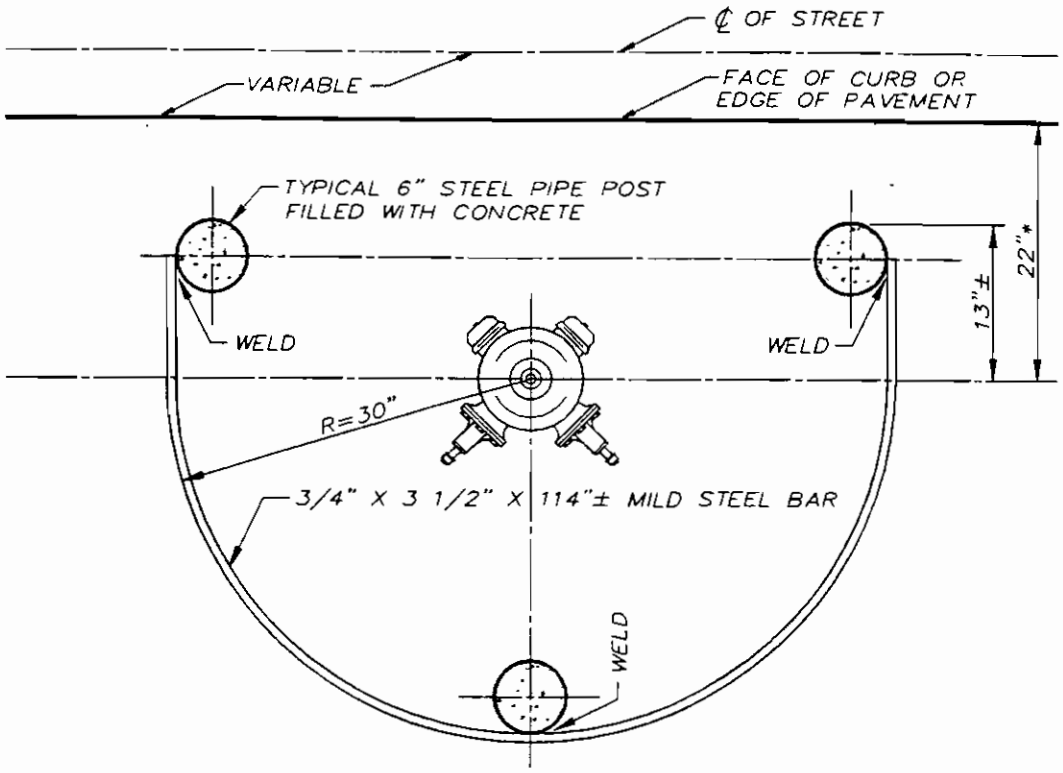

PLAN
N.T.S.

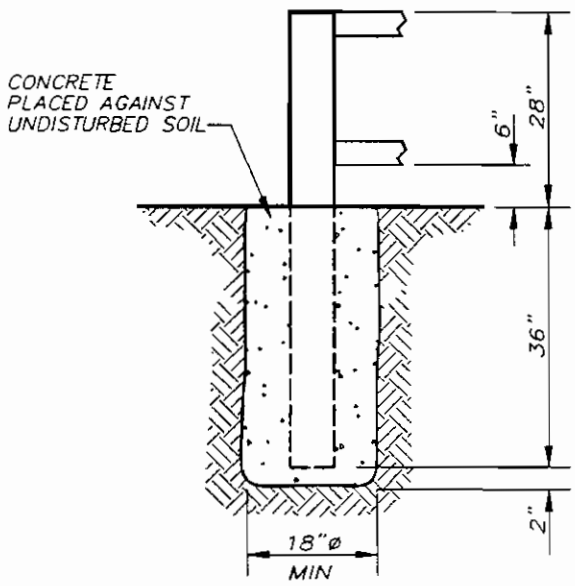

POST INSTALLATION
N.T.S.

NOTES:

1. PIPE SHALL CONFORM TO ASTM A 53, TYPE E, GRADE B, BLACK, SCHEDULE 40, PLAIN END
2. APPLY A MINIMUM OF TWO COATS EACH OF RED OXIDE PRIMER AND CHROME YELLOW ENAMEL PAINT (FEDERAL SPEC. TT-C595, COLOR NO 13538).
3. CONCRETE SHALL BE CLASS 500-C-2500 IN ACCORDANCE WITH "STANDARD SPECIFICATIONS FOR PUBLIC WORKS CONSTRUCTION" LATEST EDITION, SUBSECTION 201-1.1.2
4. * DISTANCE OF FIRE HYDRANT FROM FACE OF CURB OR EDGE OF PAVEMENT MAY BE GREATER DUE TO UNUSUAL CONDITIONS

LOS ANGELES CITY FIRE DEPARTMENT
APPROVED C. Hynes 7-23-92

3-POST FIRE HYDRANT GUARD

A9460

REVISIONS				
NO	DATE	INIT.		APP'D

DEPARTMENT OF WATER AND POWER
WATER SYSTEM — CITY OF LOS ANGELES

	NAME	DATE
DESIGNED	L. NUNO	10-91
DRAWN	V. TOROMANIAN	10-91
CHECKED	L. NUNO	10-91

APPROVED
B. WEINSTEIN BW JUNE '92

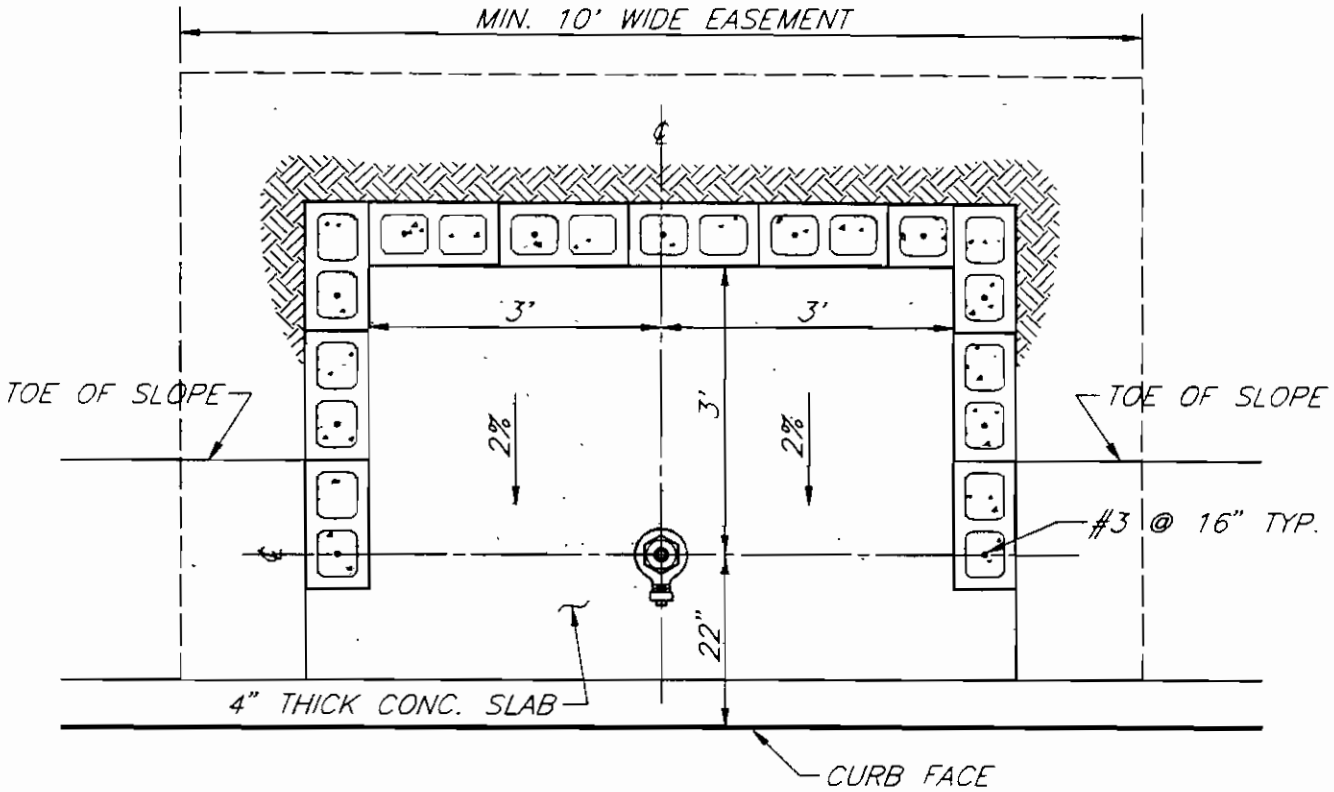

HORIZONTAL SECTION

N.T.S.

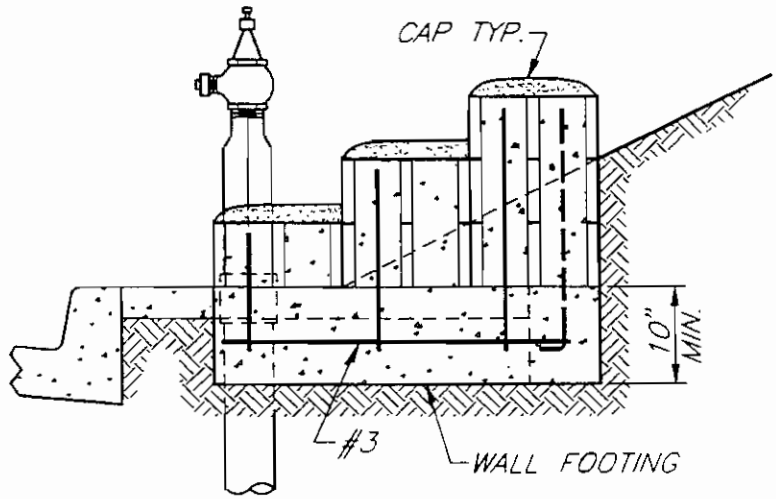

WALL SIDE SECTION

N.T.S.

NOTES:

1. HEIGHT OF WALL SHALL BE ONE BLOCK ABOVE GROUND
2. FILL ALL CELLS WITH GROUT.
3. CAP ALL CELLS WITH MORTAR.
4. CONCRETE SHALL BE CLASS 560-C-3250 IN ACCORDANCE WITH "STANDARD SPECIFICATIONS FOR PUBLIC WORKS CONSTRUCTION" LATEST EDITION, SUBSECTION 201-1.1.2.
5. WALL OVER 5' HIGH WILL REQUIRE SPECIAL PERMIT.

FIRE HYDRANT RETAINING WALL

REVISIONS				
NO.	DATE	INIT.		APP'D

DEPARTMENT OF WATER AND POWER
WATER SYSTEM — CITY OF LOS ANGELES

	NAME	DATE	APPROVED	
DESIGNED	V. TOROMANIAN	4-92	B. WEINSTEIN	JUNE '92
DRAWN	V. TOROMANIAN	4-92		
CHECKED	C. HAMVAS	4-92		

A9461

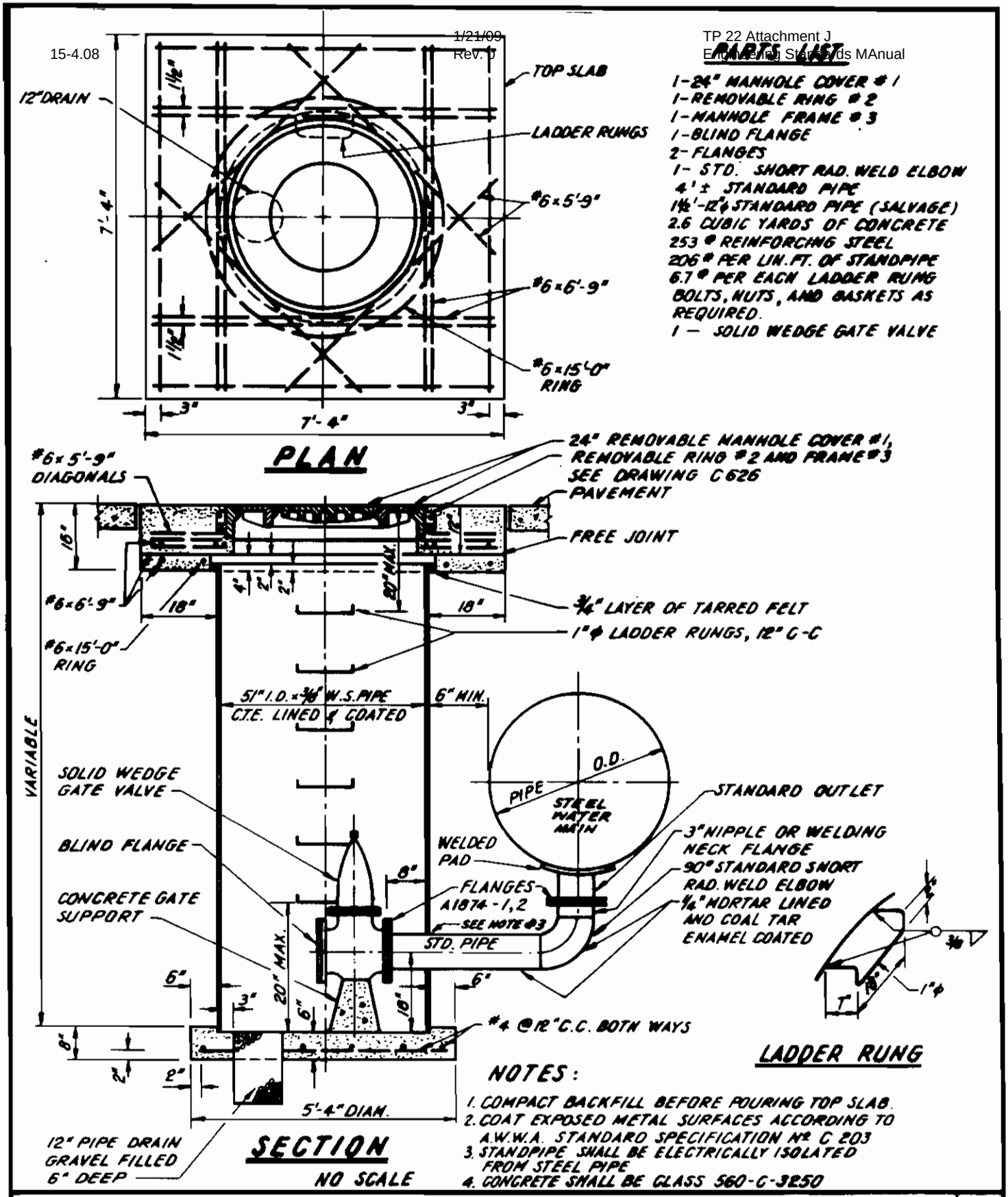

BLOW-OFF INSTALLATION FOR 16" AND LARGER STEEL PIPE

A9462

REVISIONS				
NO.	DATE	INITL'S.	DESCRIPTION	APP'V'D

DEPARTMENT OF WATER AND POWER
WATER SYSTEM — CITY OF LOS ANGELES

	NAME	DATE	APPROVED
DESIGNED	H.J.C.; E.R.W.; L.N.	11/86	
DRAWN	A. SAVULIAN	11/86	
CHECKED	[illegible]	12/86	

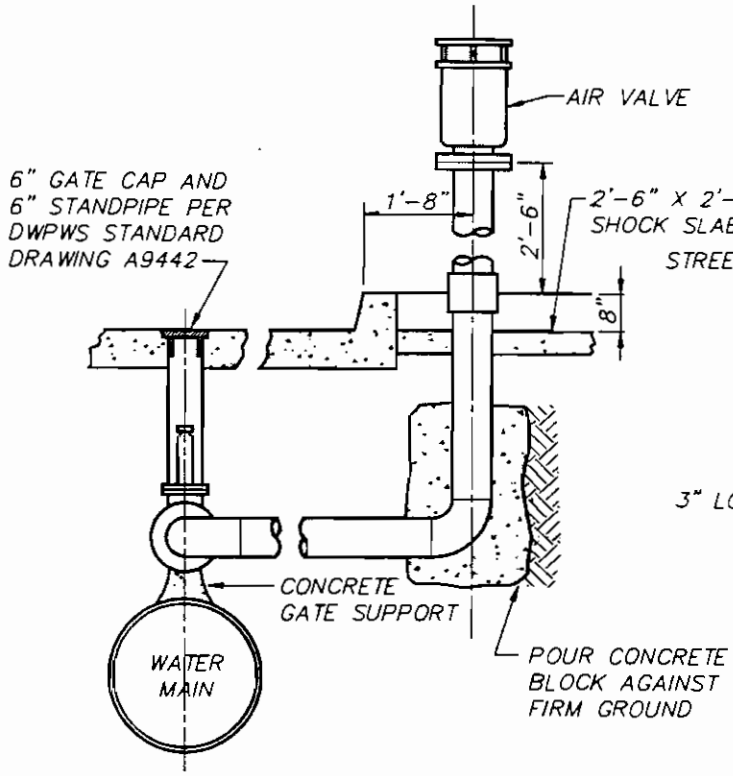

A–A
NTS

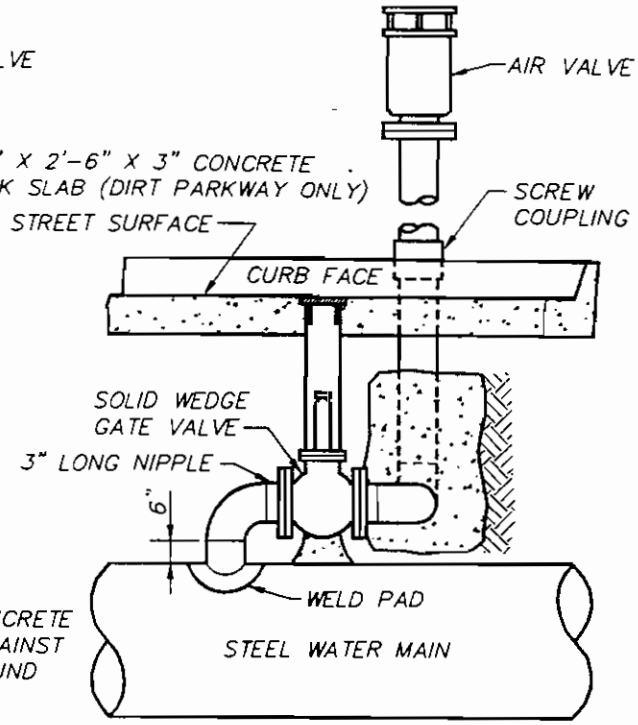

B–B
NTS

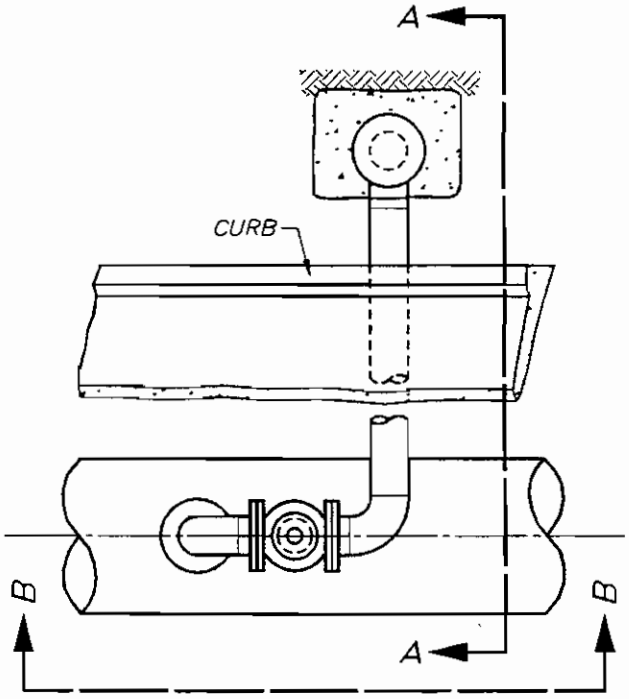

PLAN
NTS

NOTES:

1. ENAMEL AND APPLY CEMENT MORTAR COATING AND LINING IN ACCORDANCE WITH AWWA STANDARD SPECIFICATION NO. C–203.

2 USE SHORT RADIUS WELDING ELBOWS (90°).

3 FLANGE DIAMETER AND DRILLING SHALL CONFORM TO ANSI B–16.1 FOR CLASS 125 AND CLASS 250 CAST IRON FLANGES.

4. APPLY A MINIMUM OF TWO COATS EACH OF RED OXIDE PRIMER AND ELLIS PAINT CO., HYLUX NO. 3548 METALLIC GREEN PAINT TO OUTSIDE SURFACES OF EXPOSED METAL.

AIR VALVE ASSEMBLY

REVISIONS				
NO	DATE	INIT		APP'D

DEPARTMENT OF WATER AND POWER
WATER SYSTEM — CITY OF LOS ANGELES

	NAME	DATE	APPROVED	
DESIGNED	L. NUNO	11–91	B. WEINSTEIN	JUNE '92
DRAWN	V. TOROMANIAN	11–91		
CHECKED	L. NUNO	11–91		

A9463

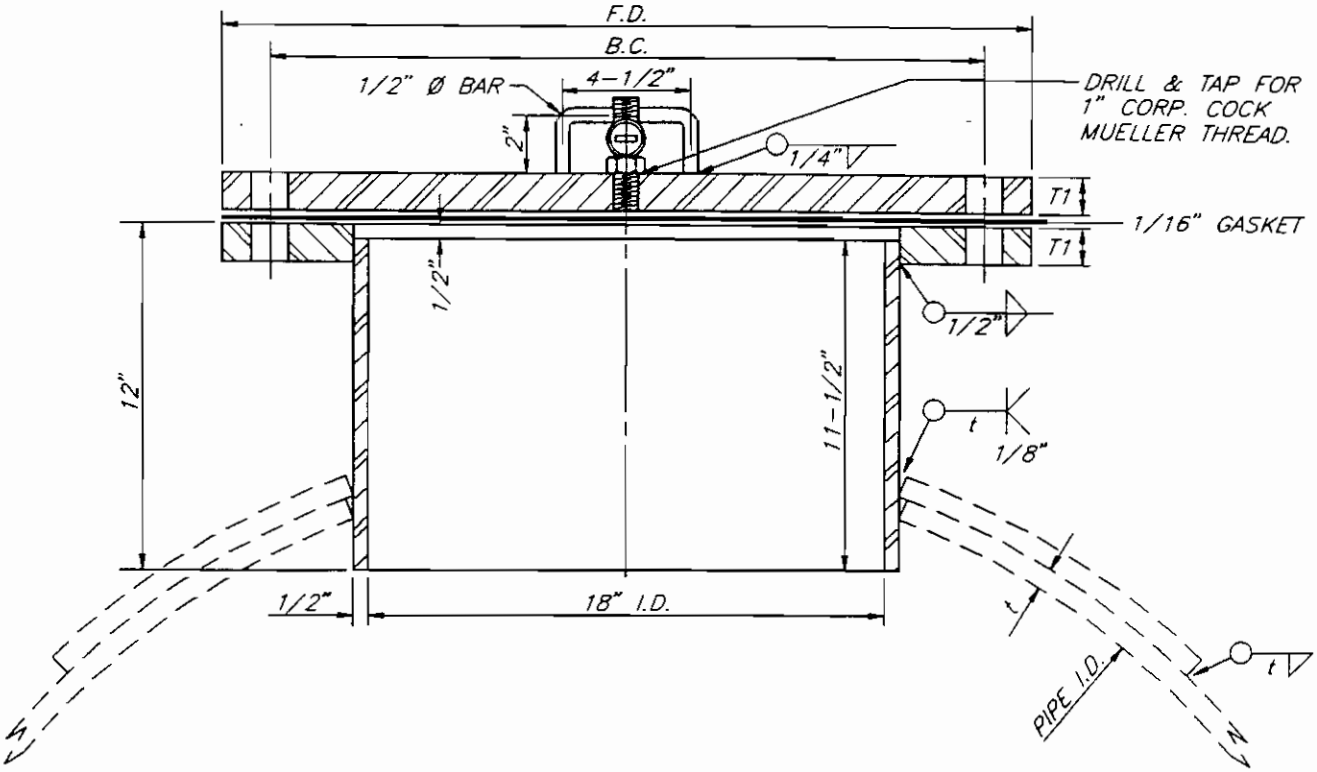

WELDED STEEL PIPE M.H. SECTION

NTS

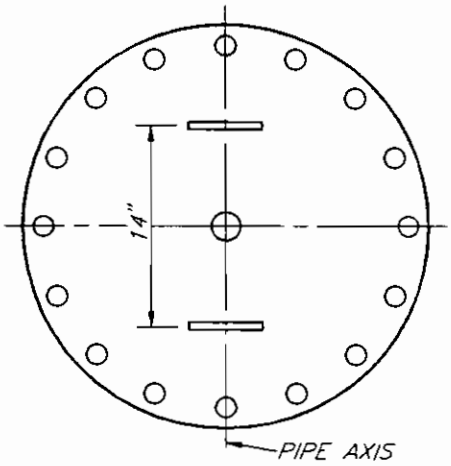

M.H. COVER PLAN

NTS

NOTES:

1. FLANGES DRILLED AND FACED AFTER WELDING.
2. FURNISH HEXAGONAL HEAD BOLTS AND NUTS.
3. FLANGES SHALL BE FULL FACED AND HAVE A SERRATED FINISH OVER THE ENTIRE FACE OF APPROXIMATELY 32 SERRATIONS PER INCH APPROXIMATELY 1/64" DEEP.
4. APPLY 1/4" CEMENT MORTAR LINING TO INTERIOR SURFACES.
5. COAL TAR ENAMEL PRIMER EXTERNAL SURFACES.

WORKING PRESSURE	F.D.	B.C.	T1	BOLTS	SIZE	BOLT HOLES
175 PSI	25"	22-3/4"	15/16"	16	1-1/8"	1-1/4"
250 PSI	28"	24-3/4"	1-5/16"	24	1-1/4"	1-3/8"

18" WELDED STEEL PIPE MAINTENANCE HOLE

A9013

REVISIONS

NO	DATE	INIT		APP'D
1	4/92	DSW	REVISED OLD A9013	

DEPARTMENT OF WATER AND POWER
WATER SYSTEM — CITY OF LOS ANGELES

	NAME	DATE	APPROVED	
DESIGNED	D. S. WALL	4-92	B. WEINSTEIN	JUNE '92
DRAWN	D. S. WALL	4-92		
CHECKED	C. HAMVAS	4-92		

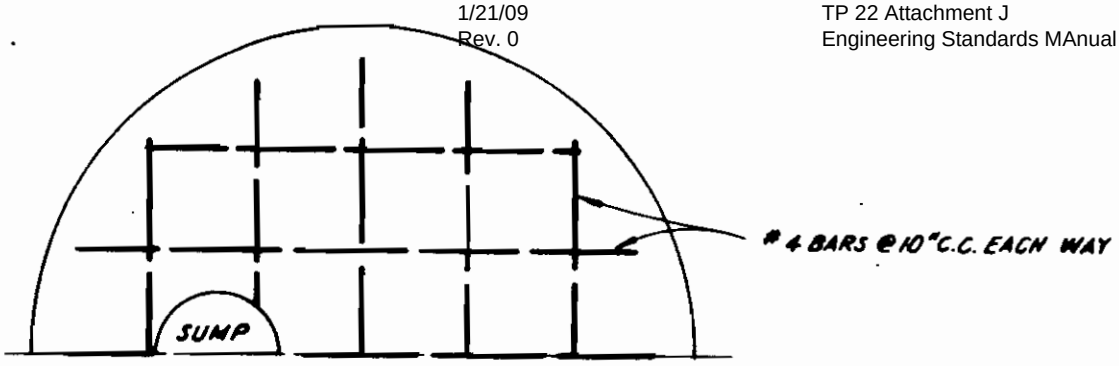

BASE HALF PLAN

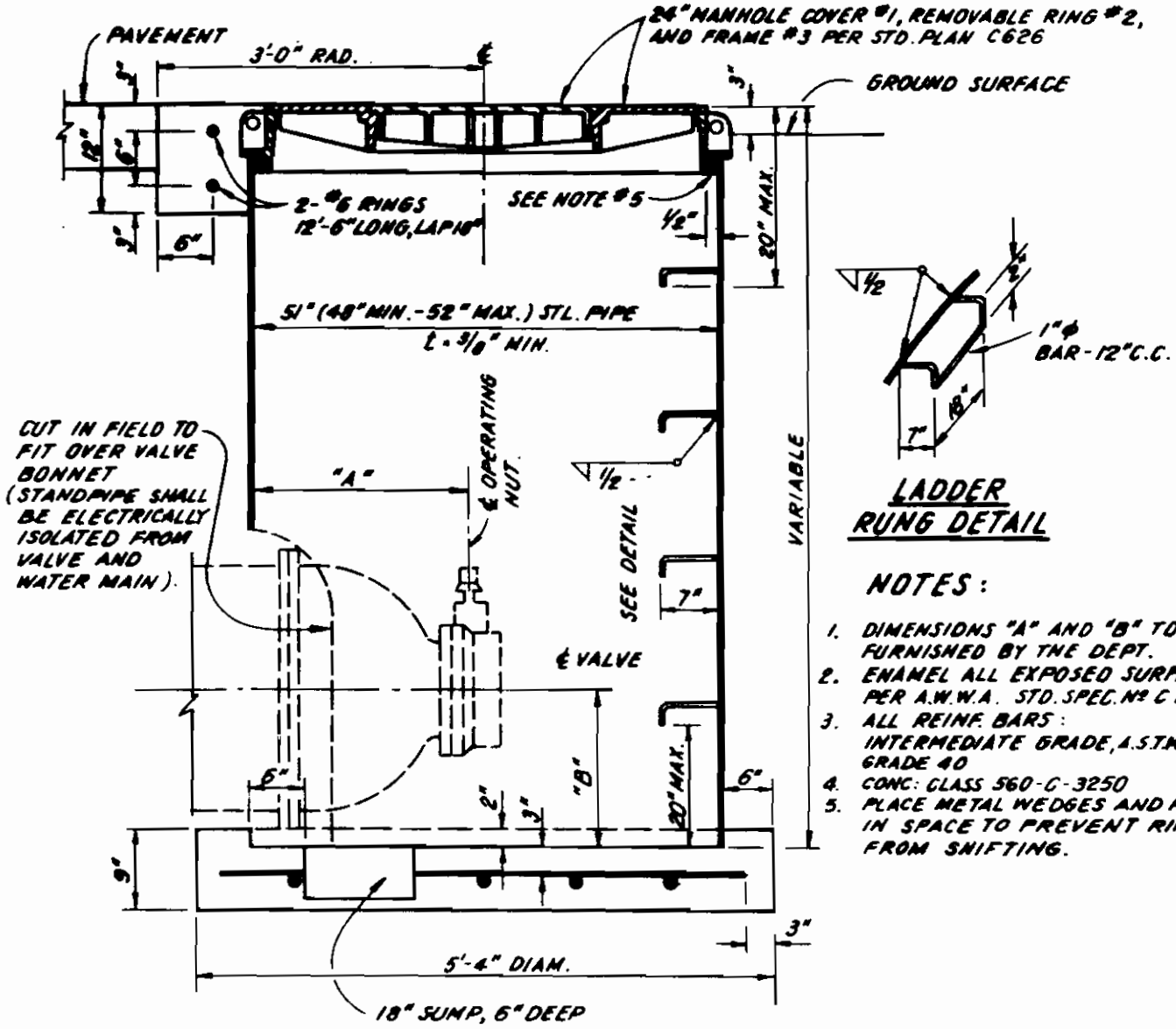

SECTION

LADDER RUNG DETAIL

NOTES:

1. DIMENSIONS "A" AND "B" TO BE FURNISHED BY THE DEPT.
2. ENAMEL ALL EXPOSED SURFACES PER A.W.W.A. STD. SPEC. Nº C 203.
3. ALL REINF. BARS: INTERMEDIATE GRADE, A.S.T.M.-A615 GRADE 40
4. CONC: CLASS 560-C-3250
5. PLACE METAL WEDGES AND FELT IN SPACE TO PREVENT RING FROM SHIFTING.

STANDPIPE FOR 16" AND LARGER LINE VALVES

A9464

REVISIONS				
NO.	DATE	INITL'S.	DESCRIPTION	APP'V'D

DEPARTMENT OF WATER AND POWER
WATER SYSTEM — CITY OF LOS ANGELES

	NAME	DATE	APPROVED
DESIGNED	W.O.D./L.N.	11/86	
DRAWN	A. SAVULIAN	11/86	
CHECKED	[illegible]	12/86	

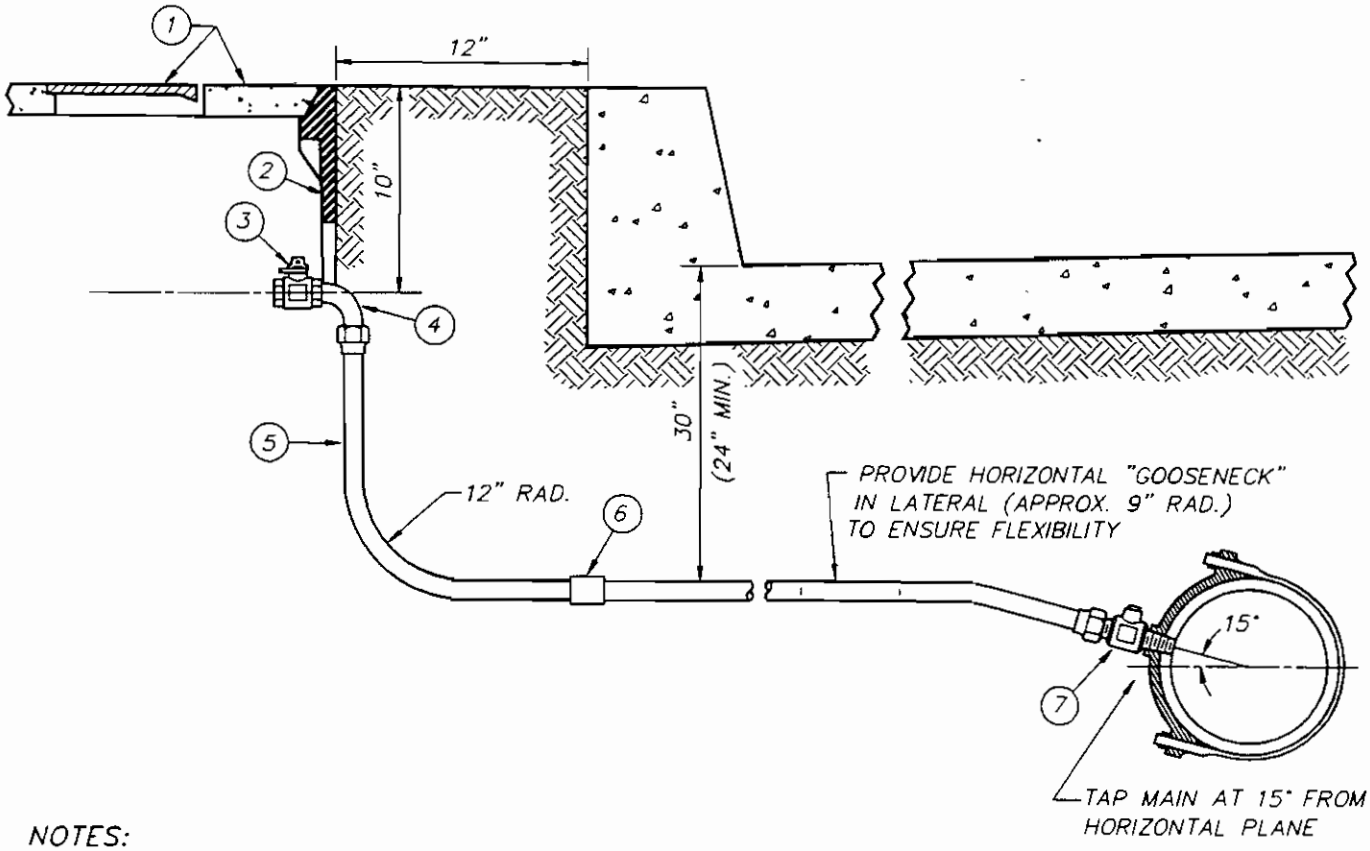

NOTES:

1 METER BOXES SHALL BE LOCATED AT LEAST 4 FEET OUTSIDE THE TOP OF THE DRIVEWAY "X".

2 SOLDER AND FLUX SHALL NOT CONTAIN LEAD

3 LATERAL SHALL BE FLUSHED WITH WATER TO REMOVE FLUX RESIDUE.

4. SEE STANDARD DRAWING A9476 FOR PIPE CONNECTION REQUIREMENTS.

MATERIAL LIST

ITEM	QTY.	DESCRIPTION	DWG. NO.	MAT. CODE
1	1	#2 CONCRETE HINGED COVER	B-5050-4	39-01-210
2	1	#2 PLASTIC METER BOX	A-9420	39-01-250
3	1	1" BRONZE FEMALE N.P.T. CURB BALL VALVE W/LOCKWING	-------	42-26-484
4	1	1" BRONZE MALE COPPER TUBING TO MALE N.P.T. ELBOW	A-9237	42-06-230
5	VAR.	1" COPPER TUBING	-------	42-06-660
6	VAR.	1" COPPER SOLDER COUPLING	-------	42-75-169
7	1	1" BRONZE MALE CORPORATION THREAD TO MALE COPPER TUBING CORPORATION BALL VALVE	-------	42-26-464

1" DOMESTIC SERVICE INSTALLATION (D.I. PIPE)

A9465

REVISIONS

NO	DATE	INIT		APP'D

DEPARTMENT OF WATER AND POWER
WATER SYSTEM — CITY OF LOS ANGELES

	NAME	DATE	APPROVED
DESIGNED	L. NUNO	11-91	B. WEINSTEIN JUNE '92
DRAWN	V. TOROMANIAN	11-91	
CHECKED	L. NUNO	3-92	

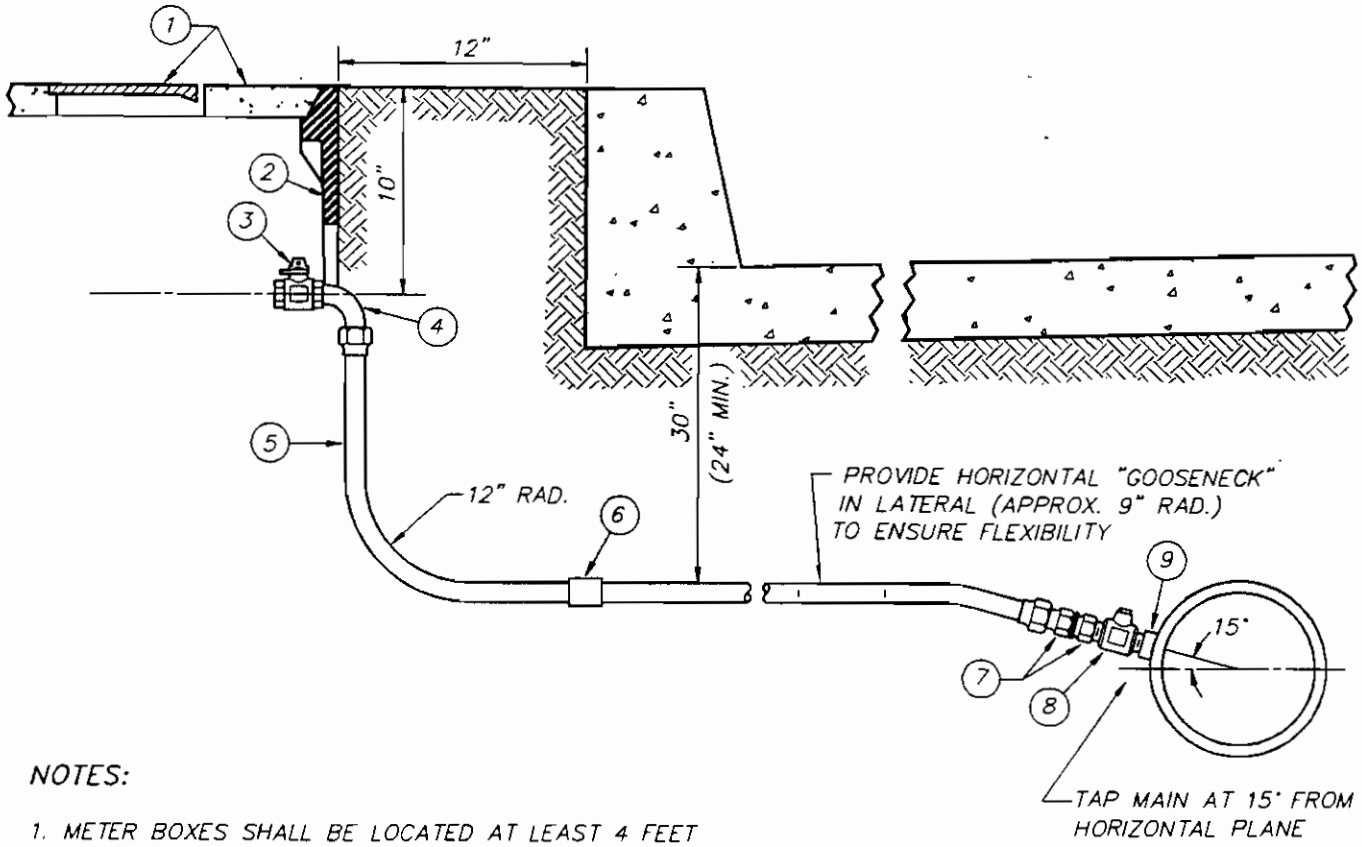

NOTES:

1. METER BOXES SHALL BE LOCATED AT LEAST 4 FEET OUTSIDE THE TOP OF THE DRIVEWAY "X".
2. SOLDER AND FLUX SHALL NOT CONTAIN LEAD.
3. LATERAL SHALL BE FLUSHED WITH WATER TO REMOVE FLUX RESIDUE.
4. SEE STANDARD DRAWING A9477 FOR PIPE CONNECTION REQUIREMENTS.

MATERIAL LIST

ITEM	QTY.	DESCRIPTION	DWG. NO.	MAT. CODE
1	1	#2 CONCRETE HINGED COVER	B-5050-4	39-01-210
2	1	#2 PLASTIC METER BOX	A-9420	39-01-250
3	1	1" BRONZE FEMALE N.P.T. CURB BALL VALVE W/LOCKWING	--------	42-26-484
4	1	1" BRONZE MALE COPPER TUBING TO MALE N.P.T. ELBOW	A-9237	42-06-230
5	VAR.	1" COPPER TUBING	--------	42-06-660
6	VAR.	1" COPPER SOLDER COUPLING	--------	42-75-169
7	1	1" BRONZE INSULATING COUPLING	--------	42-00-050
8	1	1" BRONZE MALE CORPORATION THREAD TO MALE COPPER TUBING CORPORATION BALL VALVE	--------	42-26-464
9	1	1" STEEL CORPORATION THREAD WELD COUPLING	A-9364	13-06-171

1" DOMESTIC SERVICE INSTALLATION (STL. PIPE)

A9466

REVISIONS

NO	DATE	INIT		APP'D

DEPARTMENT OF WATER AND POWER
WATER SYSTEM — CITY OF LOS ANGELES

	NAME	DATE	APPROVED	
DESIGNED	L. NUNO	11-91	B. WEINSTEIN	JUNE '92
DRAWN	V. TOROMANIAN	11-91		
CHECKED	L. NUNO	3-92		

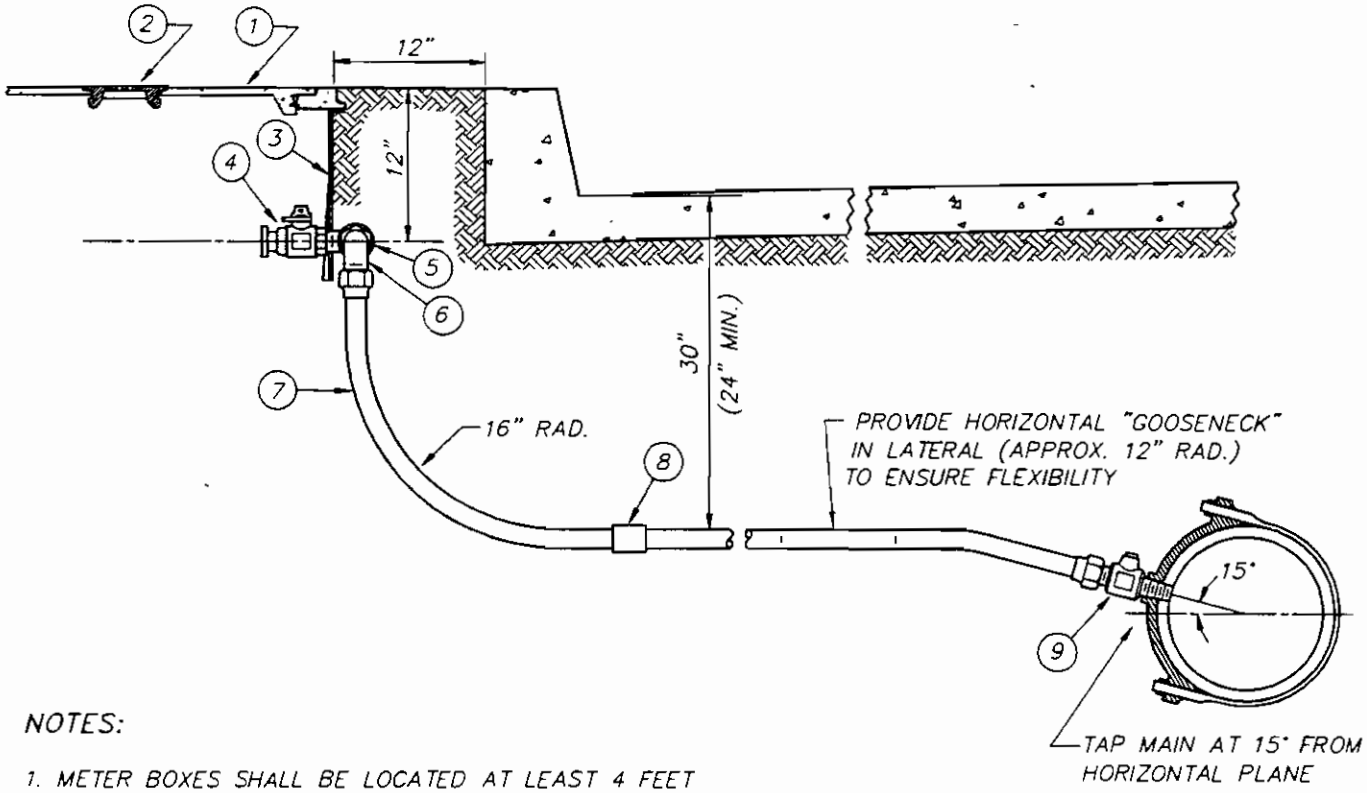

NOTES:

1. METER BOXES SHALL BE LOCATED AT LEAST 4 FEET OUTSIDE THE TOP OF THE DRIVEWAY "X".
2. SOLDER AND FLUX SHALL NOT CONTAIN LEAD.
3. LATERAL SHALL BE FLUSHED WITH WATER TO REMOVE FLUX RESIDUE.
4. SEE STANDARD DRAWING A9476 FOR PIPE CONNECTION REQUIREMENTS.

MATERIAL LIST

ITEM	QTY.	DESCRIPTION	DWG. NO.	MAT. CODE
1	1	#3 REINFORCED CONCRETE POLYMER COVER	B-5096	39-01-357
2	1	CAST IRON CENTERPIECE	A-9290	39-01-190
3	1	#3 PLASTIC METER BOX	A-9422	39-01-258
4	1	1-1/2" BRZ. FLANGE CURB BALL VALVE W/LOCKWING	--------	42-28-494
5	1	1-1/2" BRZ. STREET ELBOW	A-9314	42-08-939
6	1	1-1/2" BRZ. MALE COPPER TUBING TO MALE N.P.T. ELBOW	A-9237	42-08-230
7	VAR.	1-1/2" COPPER TUBING	--------	42-08-663
8	VAR.	1-1/2" COPPER SOLDER COUPLING	--------	42-75-177
9	1	1-1/2" BRONZE MALE CORPORATION THREAD TO MALE COPPER TUBING CORPORATION BALL VALVE	--------	42-28-464

1-1/2" DOMESTIC SERVICE INSTALLATION (D.I. PIPE)

A9467

REVISIONS

NO.	DATE	INIT		APP'D

DEPARTMENT OF WATER AND POWER
WATER SYSTEM — CITY OF LOS ANGELES

	NAME	DATE	APPROVED	
DESIGNED	L. NUNO	11-91	B. WEINSTEIN	JUNE '92
DRAWN	V. TOROMANIAN	11-91		
CHECKED	L. NUNO	3-92		

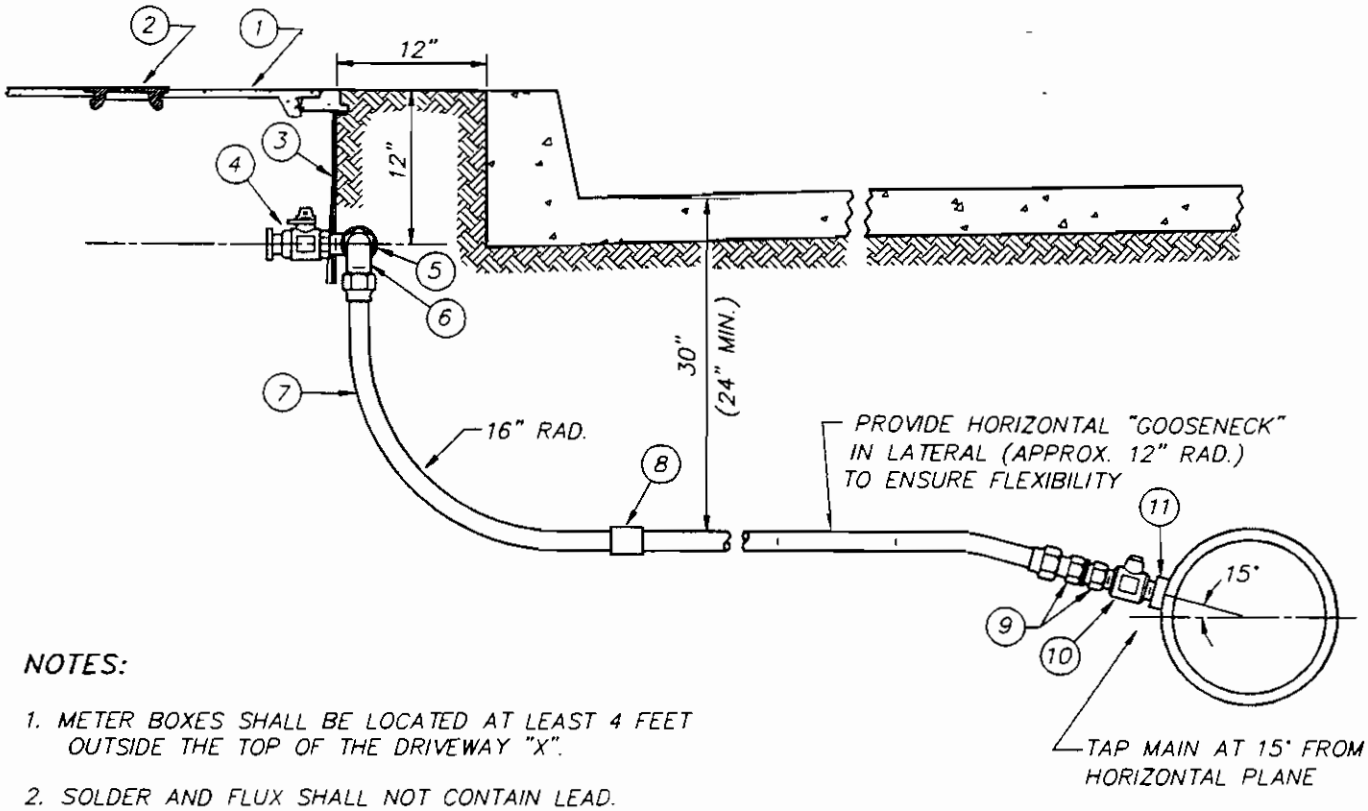

NOTES:

1. METER BOXES SHALL BE LOCATED AT LEAST 4 FEET OUTSIDE THE TOP OF THE DRIVEWAY "X".
2. SOLDER AND FLUX SHALL NOT CONTAIN LEAD.
3. LATERAL SHALL BE FLUSHED WITH WATER TO REMOVE FLUX RESIDUE.
4. SEE STANDARD DRAWING A9477 FOR PIPE CONNECTION REQUIREMENTS.

MATERIAL LIST

ITEM	QTY.	DESCRIPTION	DWG. NO.	MAT. CODE
1	1	#3 REINFORCED CONCRETE POLYMER COVER	B-5096	39-01-357
2	1	CAST IRON CENTERPIECE	A-9290	39-01-190
3	1	#3 PLASTIC METER BOX	A-9422	39-01-258
4	1	1-1/2" BRZ. FLANGE CURB BALL VALVE W/LOCKWING	-------	42-28-494
5	1	1-1/2" BRZ. STREET ELBOW	A-9314	42-08-939
6	1	1-1/2" BRZ. MALE COPPER TUBING TO MALE N.P.T. ELBOW	A-9237	42-08-230
7	VAR.	1-1/2" COPPER TUBING	-------	42-08-663
8	VAR.	1-1/2" COPPER SOLDER COUPLING	-------	42-75-177
9	1	1-1/2" BRZ. INSULATING COUPLING	-------	42-00-051
10	1	1-1/2" BRZ. MALE CORPORATION THREAD TO MALE COPPER TUBING CORPORATION BALL VALVE	-------	42-28-464
11	1	1-1/2" STEEL CORPORATION THREAD WELD COUPLING	A-9365	13-08-171

1-1/2" DOMESTIC SERVICE INSTALLATION (STL. PIPE)

A9468

REVISIONS

NO	DATE	INIT.		APP'D

DEPARTMENT OF WATER AND POWER
WATER SYSTEM — CITY OF LOS ANGELES

	NAME	DATE
DESIGNED	L. NUNO	12-91
DRAWN	V. TOROMANIAN	12-91
CHECKED	L. NUNO	3-92

APPROVED B. WEINSTEIN BW JUNE '92

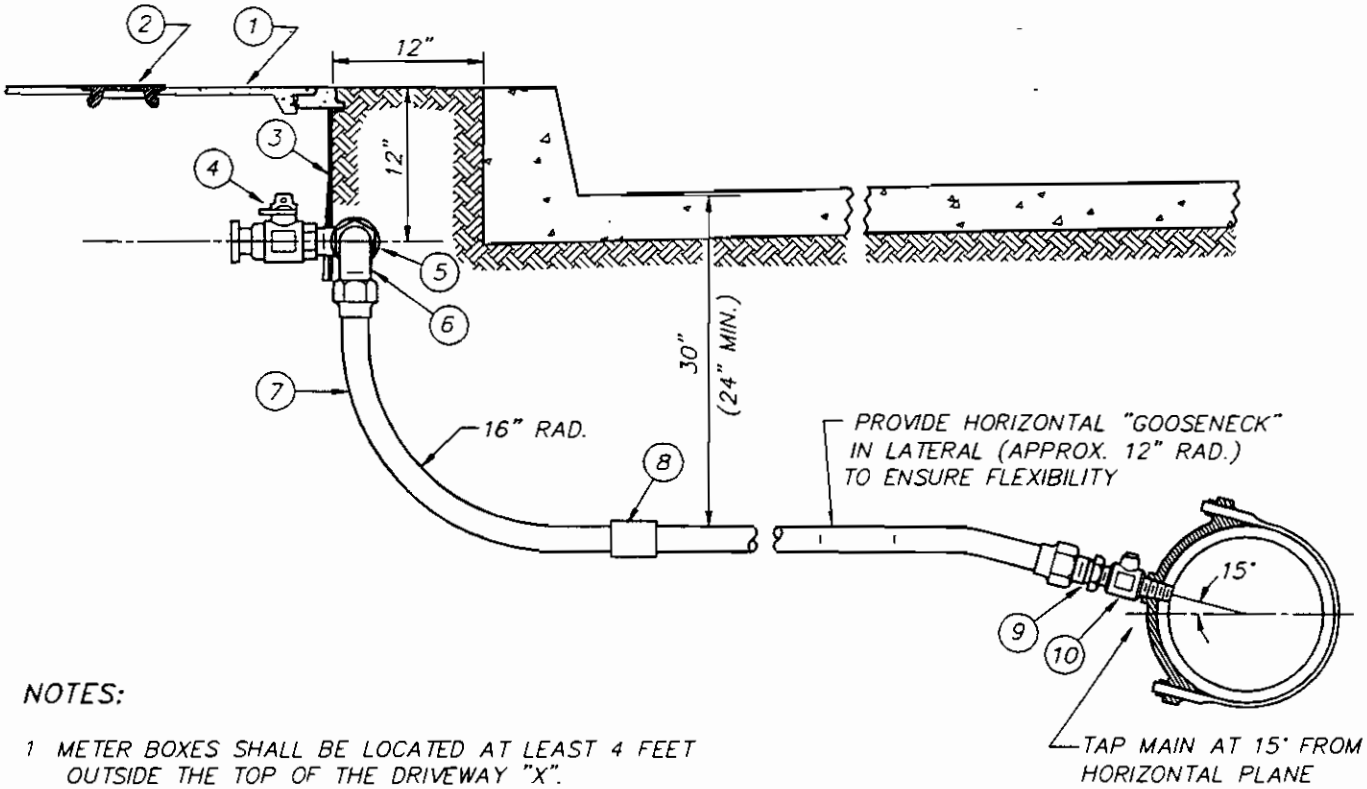

NOTES:

1 METER BOXES SHALL BE LOCATED AT LEAST 4 FEET OUTSIDE THE TOP OF THE DRIVEWAY "X".

2. SOLDER AND FLUX SHALL NOT CONTAIN LEAD.

3 LATERAL SHALL BE FLUSHED WITH WATER TO REMOVE FLUX RESIDUE.

4. SEE STANDARD DRAWING A9476 FOR PIPE CONNECTION REQUIREMENTS.

MATERIAL LIST

ITEM	QTY.	DESCRIPTION	DWG. NO.	MAT. CODE
1	1	#3 REINFORCED CONCRETE POLYMER COVER	B-5096	39-01-357
2	1	CAST IRON CENTERPIECE	A-9290	39-01-190
3	1	#3 PLASTIC METER BOX	A-9422	39-01-258
4	1	2" BRZ. FLANGE CURB BALL VALVE W/LOCKWING	-------	42-29-494
5	1	2" BRZ STREET ELBOW	A-9314	42-09-939
6	1	2" BRZ. MALE COPPER TUBING TO MALE N.P.T. ELBOW	A-9237	42-09-230
7	VAR.	2" COPPER TUBING	-------	42-09-663
8	VAR.	2" COPPER SOLDER COUPLING	-------	42-75-182
9	1	2" X 1-1/2" BRASS ADAPTOR	A-9361	42-09-002
10	1	1-1/2" BRONZE MALE CORPORATION THREAD TO MALE COPPER TUBING CORPORATION BALL VALVE	-------	42-28-464

2" DOMESTIC SERVICE INSTALLATION (D.I. PIPE)

A9469

REVISIONS

NO.	DATE	INIT.		APP'D

DEPARTMENT OF WATER AND POWER
WATER SYSTEM CITY OF LOS ANGELES

	NAME	DATE	APPROVED
DESIGNED	L. NUNO	11-91	B. WEINSTEIN JUNE '92
DRAWN	V. TOROMANIAN	11-91	
CHECKED	L. NUNO	3-92	

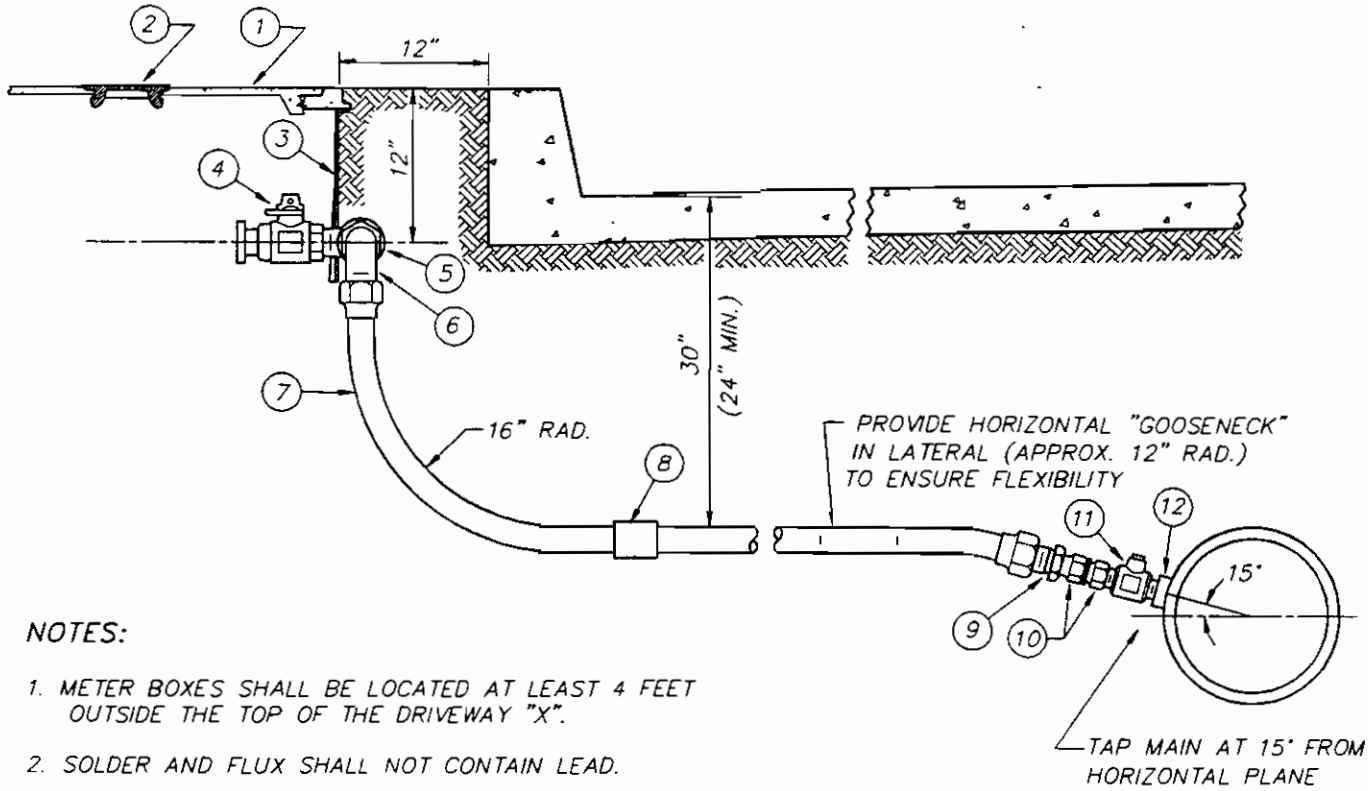

NOTES:

1. METER BOXES SHALL BE LOCATED AT LEAST 4 FEET OUTSIDE THE TOP OF THE DRIVEWAY "X".
2. SOLDER AND FLUX SHALL NOT CONTAIN LEAD.
3. LATERAL SHALL BE FLUSHED WITH WATER TO REMOVE FLUX RESIDUE.
4. SEE STANDARD DRAWING A9477 FOR PIPE CONNECTION REQUIREMENTS.

MATERIAL LIST

ITEM	QTY.	DESCRIPTION	DWG. NO.	MAT. CODE
1	1	#3 REINFORCED CONCRETE POLYMER COVER	B-5096	39-01-357
2	1	CAST IRON CENTERPIECE	A-9290	39-01-190
3	1	#3 PLASTIC METER BOX	A-9422	39-01-258
4	1	2" BRZ. FLANGE CURB BALL VALVE W/LOCKWING	-------	42-29-494
5	1	2" BRZ. STREET ELBOW	A-9314	42-09-939
6	1	2" BRZ. MALE COPPER TUBING TO MALE N.P.T. ELBOW	A-9237	42-09-230
7	VAR.	2" COPPER TUBING	-------	42-09-663
8	VAR.	2" COPPER SOLDER COUPLING	-------	42-75-182
9	1	2" X 1-1/2" BRASS ADAPTOR	A-9361	42-09-002
10	1	1-1/2" BRZ. INSULATING COUPLING	-------	42-00-051
11	1	1-1/2" BRONZE MALE CORPORATION THREAD TO MALE COPPER TUBING CORPORATION BALL VALVE	-------	42-28-464
12	1	1-1/2" STEEL CORPORATION THREAD WELD COUPLING	A-9365	13-08-171

2" DOMESTIC SERVICE INSTALLATION (STL. PIPE)

A9470

REVISIONS

NO.	DATE	INIT.		APP'D

DEPARTMENT OF WATER AND POWER
WATER SYSTEM — CITY OF LOS ANGELES

	NAME	DATE	APPROVED
DESIGNED	L NUNO	12-91	B. WEINSTEIN JUNE '92
DRAWN	V TOROMANIAN	12-91	
CHECKED	L NUNO	3-92	

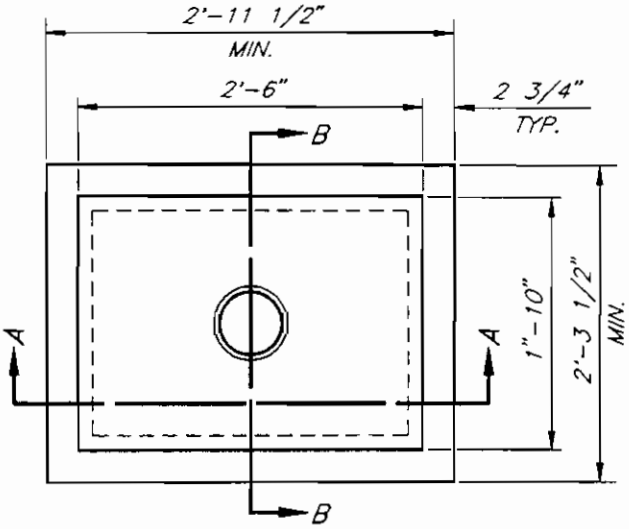

PLAN
NTS

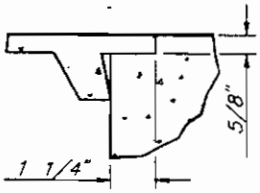

DETAIL
NTS

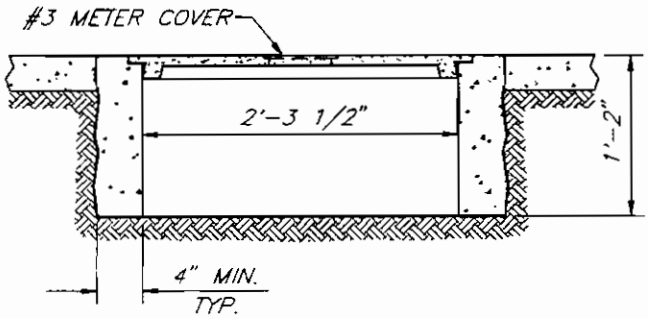

SECTION A-A
NTS

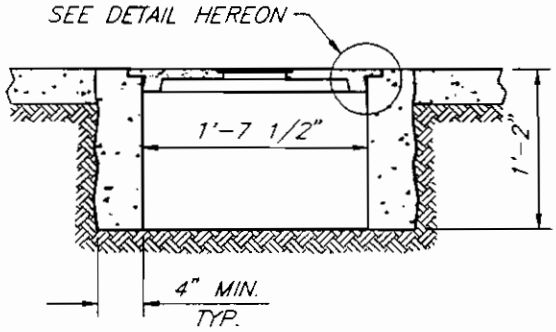

SECTION B-B
NTS

NOTES:

1. CEMENT SHALL CONFORM TO THE STANDARD SPECIFICATIONS FOR PORTLAND CEMENT ASTM C-150, TYPE II
2. CONCRETE SHALL BE CLASS 560-B-3250 IN ACCORDANCE WITH "STANDARD SPECIFICATIONS FOR PUBLIC WORKS CONSTRUCTION" LATEST EDITION, SUBSECTION 201-1.1.2.
3. COVER SHALL CONFORM TO DWPWS STANDARD DRAWING B5096.
4. COVER SHALL NOT ROCK WHEN PLACED ON THE METER COVER OPENING.
5. WALL TOP SHALL HAVE A NON-SKID SURFACE (BROOM FINISH)
6. INLET AND OUTLET PIPING SHALL BE ENCASED IN WALLS
7. INLET AND OUTLET PIPING SHALL BE WRAPPED WITH TAR PAPER PRIOR TO CASTING WALLS.

NO. 3 CONCRETE METER BOX
(SIDEWALK LOADING ONLY)

A9471

REVISIONS				
NO	DATE	INIT		APP'D

DEPARTMENT OF WATER AND POWER
WATER SYSTEM — CITY OF LOS ANGELES

	NAME	DATE	APPROVED
DESIGNED	V. TOROMANIAN	4-92	B. WEINSTEIN JUNE '92
DRAWN	V. TOROMANIAN	4-92	
CHECKED	C. HAMVAS	4-92	

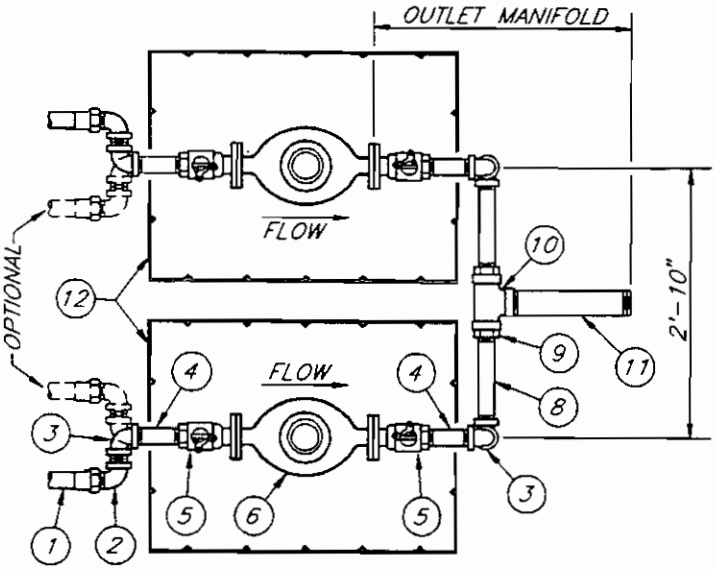

HORIZONTAL SECTION
NTS

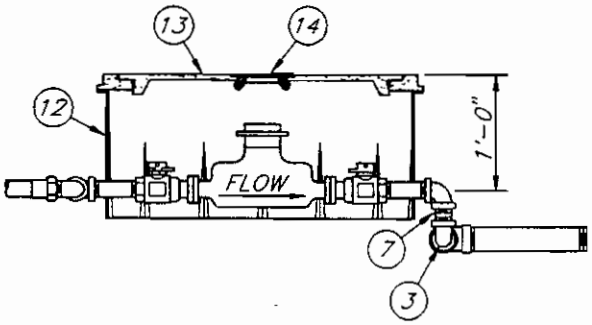

PROFILE
NTS

NOTES:

1. CONNECTIONS TO WATER MAIN SHALL BE IDENTICAL TO 2" SERVICE CONNECTIONS.
2. MANIFOLD AND METERS ARE SUPPLIED BY DWP-WS AS AN ASSEMBLY FOR DEVELOPER-INSTALLED SERVICE.
3. SOLDER AND FLUX SHALL NOT CONTAIN LEAD.
4. SERVICE LATERALS SHALL BE FLUSHED WITH WATER PRIOR TO INSTALLATION OF METERS TO REMOVE FLUX RESIDUE.
5. METER BOXES SHALL BE LOCATED AT LEAST 4 FEET OUTSIDE THE TOP OF THE DRIVEWAY "X".

MATERIAL LIST

ITEM	QTY.	DESCRIPTION	DWG. NO.	MAT. CODE
1	VAR.	2" COPPER TUBING	-------	42-09-663
2	2	2" BRZ MALE COPPER TUBING TO MALE N.P.T. ELBOW	A-9237	42-09-230
3	6	2" X 90° BRZ. ELL PIPE	A-9325	42-09-224
4	4	2" X 6" BRZ. STD. NIPPLE PIPE	-------	42-09-366
5	4	2" BRZ. FLG. CURB BALL VALVE W/ LOCKWING	-------	42-29-494
6	2	2" METER	-------	44-83-901
7	2	2" X 2-1/2" BRZ. STD. NIPPLE PIPE	-------	42-09-360
8	2	2" X 12" BRZ. STD. NIPPLE PIPE	-------	42-09-369
9	2	3" X 2" BRZ. HEX. BUSHING	-------	42-11-039
10	1	3" BRZ. STD. TEE PIPE	-------	42-11-620
11	1	3" X 18" BRZ. STD. NIPPLE PIPE	-------	42-11-372
12	2	#3 PLASTIC METER BOX	A-9422	39-01-258
13	2	#3 REINFORCED CONCRETE POLYMER COVER (CENTER HOLE)	B-5096	39-01-357
14	2	CAST IRON CENTERPIECE	A-9290	39-01-190

3" EQUIVALENT SERVICE IN PLASTIC METER BOXES
(SIDEWALK LOADING ONLY)

A9472

REVISIONS

NO	DATE	INIT		APP'D

DEPARTMENT OF WATER AND POWER
WATER SYSTEM — CITY OF LOS ANGELES

	NAME	DATE	APPROVED	
DESIGNED	L. NUNO	12-91	B. WEINSTEIN	JUNE '92
DRAWN	V. TOROMANIAN	1-92		
CHECKED	L. NUNO	1-92		

NOTES:

1. CEMENT SHALL CONFORM TO THE STANDARD SPECIFICATIONS FOR PORTLAND CEMENT ASTM C-150, TYPE II.
2. CONCRETE SHALL BE CLASS 560-B-3250 IN ACCORDANCE WITH "STANDARD SPECIFICATIONS FOR PUBLIC WORKS CONSTRUCTION" LATEST EDITION, SUBSECTION 201-1.1.2.
3. COVERS SHALL NOT ROCK WHEN PLACED ON THE METER COVER OPENING.
4. WALL TOP SHALL HAVE A NON-SKID SURFACE (BROOM FINISH).
5. CONNECTIONS TO WATER MAIN SHALL BE IDENTICAL TO 2" SERVICE CONNECTIONS.
6. ENCASE OUTLET MANIFOLD PIPING AND INLET NIPPLES IN VAULT WALL AS SHOWN.
7. MANIFOLD AND METERS ARE SUPPLIED BY DWP-WS AS AN ASSEMBLY FOR DEVELOPER-INSTALLED SERVICE.
8. SOLDER AND FLUX SHALL NOT CONTAIN LEAD.
9. SERVICE LATERAL SHALL BE FLUSHED WITH WATER PRIOR TO INSTALLATION OF METER TO REMOVE FLUX RESIDUE.
10. METER BOXES SHALL BE LOCATED AT LEAST 4 FEET OUTSIDE THE TOP OF THE DRIVEWAY "X".

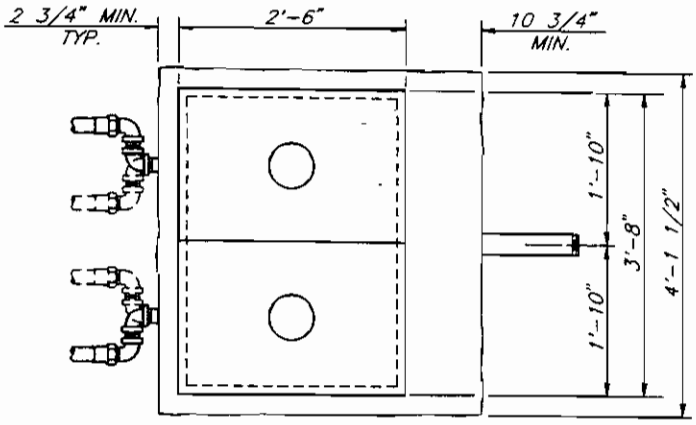

PLAN
NTS

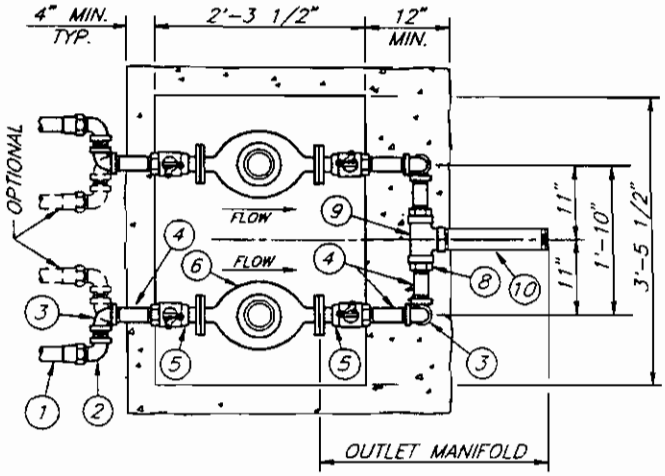

HORIZONTAL SECTION
NTS

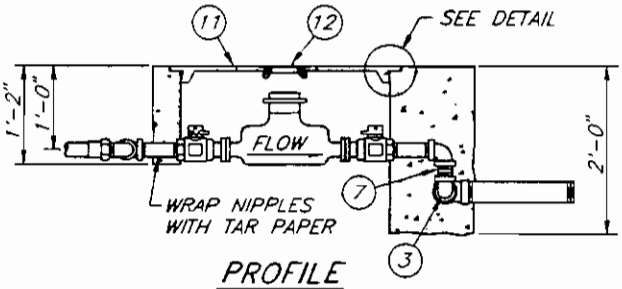

PROFILE
NTS

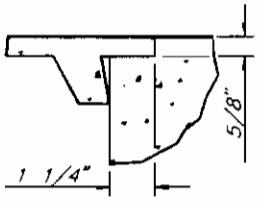

DETAIL
NTS

MATERIAL LIST

ITEM	QTY.	DESCRIPTION	DWG. NO.	MAT. CODE
1	VAR.	2" COPPER TUBING	--------	42-09-663
2	2	2" BRZ. MALE COPPER TUBING TO MALE N.P.T. ELBOW	A-9237	42-09-230
3	6	2" X 90° BRZ. ELL PIPE	A-9325	42-09-224
4	6	2" X 6" BRZ. STD. NIPPLE PIPE	--------	42-09-366
5	4	2" BRZ. FLG. CURB BALL VALVE W/ LOCKWING	--------	42-29-494
6	2	2" METER	--------	44-83-901
7	2	2" X 2-1/2" BRZ STD. NIPPLE PIPE	--------	42-09-360
8	2	3" X 2" BRZ HEX BUSHING	--------	42-11-039
9	1	3" BRZ. STD TEE PIPE	--------	42-11-620
10	1	3" X 18" BRZ. STD. NIPPLE PIPE	--------	42-11-372
11	2	#3 REINFORCED CONCRETE POLYMER COVER (CENTER HOLE)	B-5096	39-01-357
12	2	CAST IRON CENTERPIECE	A-9290	39-01-190

3" EQUIVALENT SERVICE IN CONCRETE METER BOX

(SIDEWALK LOADING ONLY)

REVISIONS

NO	DATE	INIT.		APP'D

DEPARTMENT OF WATER AND POWER
WATER SYSTEM — CITY OF LOS ANGELES

	NAME	DATE	APPROVED	
DESIGNED	L. NUNO	12-91	B. WEINSTEIN	JUNE '92
DRAWN	V. TOROMANIAN	1-92		
CHECKED	L. NUNO	1-92		

A9473

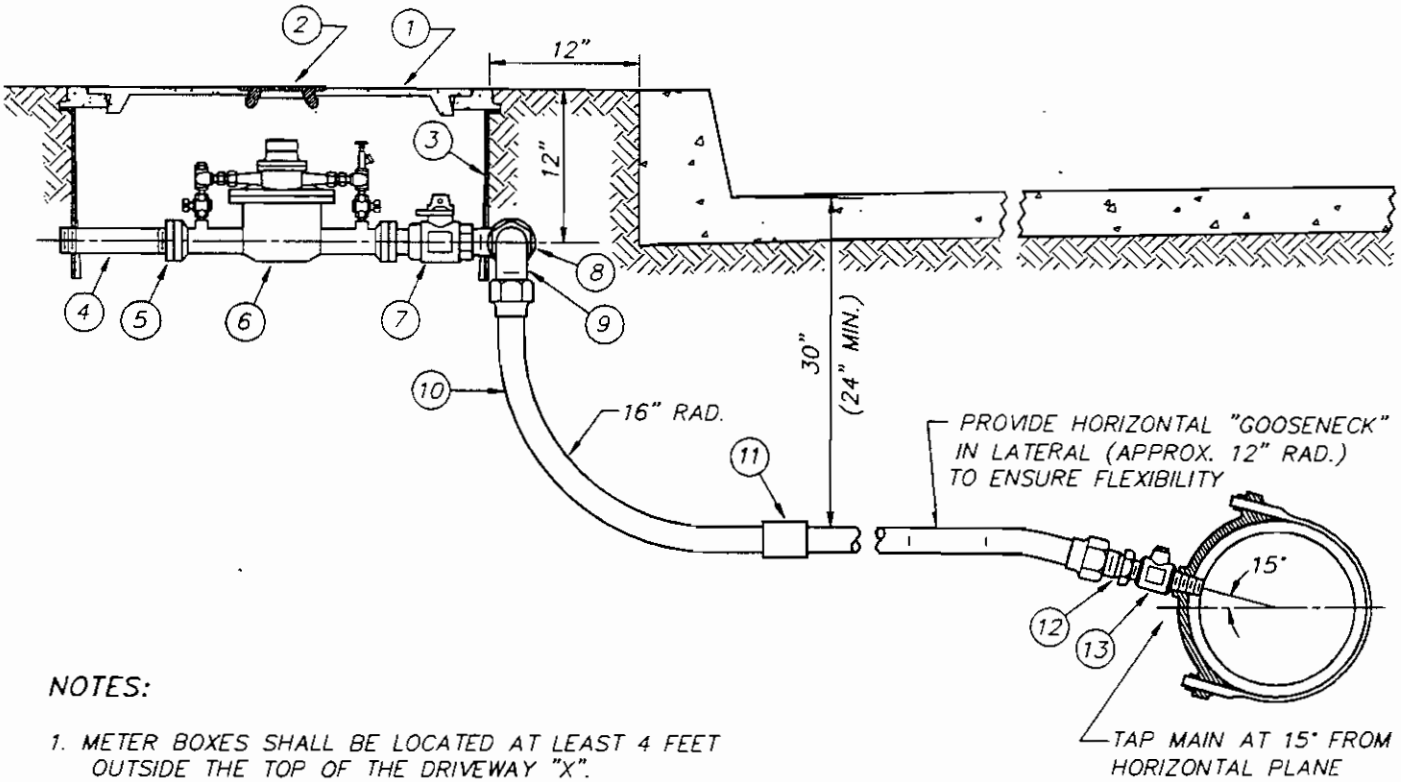

NOTES:

1. METER BOXES SHALL BE LOCATED AT LEAST 4 FEET OUTSIDE THE TOP OF THE DRIVEWAY "X".
2. SOLDER AND FLUX SHALL NOT CONTAIN LEAD.
3. LATERAL SHALL BE FLUSHED WITH WATER TO REMOVE FLUX RESIDUE.
4. SEE STANDARD DRAWING A9476 FOR PIPE CONNECTION REQUIREMENTS.

MATERIAL LIST

ITEM	QTY.	DESCRIPTION	DWG. NO.	MAT. CODE
1	1	#3 REINFORCED CONCRETE POLYMER COVER (CENTER HOLE)	B-5096	39-01-357
2	1	CAST IRON CENTERPIECE	A-9290	39-01-190
3	1	#3 PLASTIC METER BOX	A-9422	39-01-258
4	1	2" X 8" PVC SCHEDULE 80 NIPPLE	-------	13-01-728
5	1	2" C.I. METER COMPANION FLANGE	A-9005	11-09-292
6	1	2" DETECTOR CHECK W/ BYPASS METER	-------	--------
7	1	2" BRZ. FLANGE CURB BALL VALVE W/LOCKWING	-------	42-29-494
8	1	2" BRZ STREET ELBOW	A-9314	42-09-939
9	1	2" BRZ. MALE COPPER TUBING TO MALE N.P.T. ELBOW	A-9237	42-09-230
10	VAR.	2" COPPER TUBING	-------	42-09-663
11	VAR.	2" COPPER SOLDER COUPLING	-------	42-75-182
12	1	2" X 1-1/2" BRASS ADAPTOR	A-9361	42-09-002
13	1	1-1/2" BRONZE MALE CORPORATION THREAD TO MALE COPPER TUBING CORPORATION BALL VALVE	-------	42-28-464

2" FIRE SERVICE INSTALLATION (D.I. PIPE)

A9474

REVISIONS

NO	DATE	INIT.		APP'D

DEPARTMENT OF WATER AND POWER
WATER SYSTEM — CITY OF LOS ANGELES

	NAME	DATE	APPROVED
DESIGNED	L. NUNO	12-91	B. WEINSTEIN JUNE '92
DRAWN	V. TOROMANIAN	12-91	
CHECKED	L. NUNO	3-92	

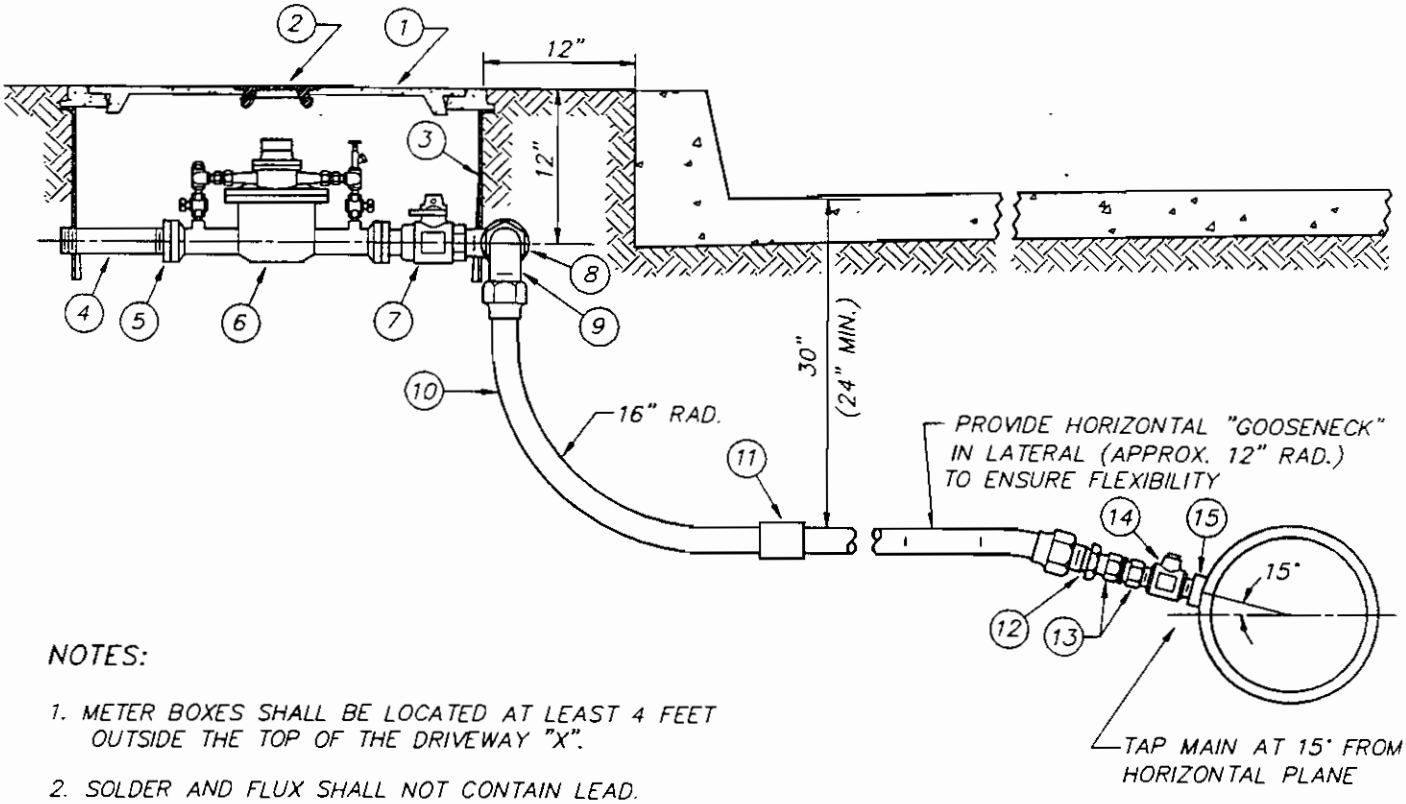

NOTES:

1. METER BOXES SHALL BE LOCATED AT LEAST 4 FEET OUTSIDE THE TOP OF THE DRIVEWAY "X".
2. SOLDER AND FLUX SHALL NOT CONTAIN LEAD.
3. LATERAL SHALL BE FLUSHED WITH WATER TO REMOVE FLUX RESIDUE.
4. SEE STANDARD DRAWING A9477 FOR PIPE CONNECTION REQUIREMENTS.

MATERIAL LIST

ITEM	QTY.	DESCRIPTION	DWG. NO.	MAT. CODE
1	1	#3 REINFORCED CONCRETE POLYMER COVER (CENTER HOLE)	B-5096	39-01-357
2	1	CAST IRON CENTERPIECE	A-9290	39-01-190
3	1	#3 PLASTIC METER BOX	A-9422	39-01-258
4	1	2" X 8" PVC SCHEDULE 80 NIPPLE	-------	13-01-728
5	1	2" C.I. METER COMPANION FLANGE	A-9005	11-09-292
6	1	2" DETECTOR CHECK W/ BYPASS METER	-------	--------
7	1	2" BRZ. FLANGE CURB BALL VALVE W/LOCKWING	-------	42-29-494
8	1	2" BRZ. STREET ELBOW	A-9314	42-09-939
9	1	2" BRZ. MALE COPPER TUBING TO MALE N.P.T. ELBOW	A-9237	42-09-230
10	VAR.	2" COPPER TUBING	-------	42-09-663
11	VAR.	2" COPPER SOLDER COUPLING	-------	42-75-182
12	1	2" X 1-1/2" BRASS ADAPTOR	A-9361	42-09-002
13	1	1-1/2" BRZ INSULATING COUPLING	-------	42-00-051
14	1	1-1/2" BRONZE MALE CORPORATION THREAD TO MALE COPPER TUBING CORPORATION BALL VALVE	-------	42-28-464
15	1	1-1/2" STEEL CORPORATION THREAD WELD COUPLING	A-9365	13-08-171

2" FIRE SERVICE INSTALLATION (STL. PIPE)

A9475

REVISIONS

NO.	DATE	INIT		APP'D

DEPARTMENT OF WATER AND POWER
WATER SYSTEM — CITY OF LOS ANGELES

	NAME	DATE	APPROVED	
DESIGNED	L. NUNO	12-91	B. WEINSTEIN	JUNE '92
DRAWN	V. TOROMANIAN	12-91		
CHECKED	L. NUNO	3-92		

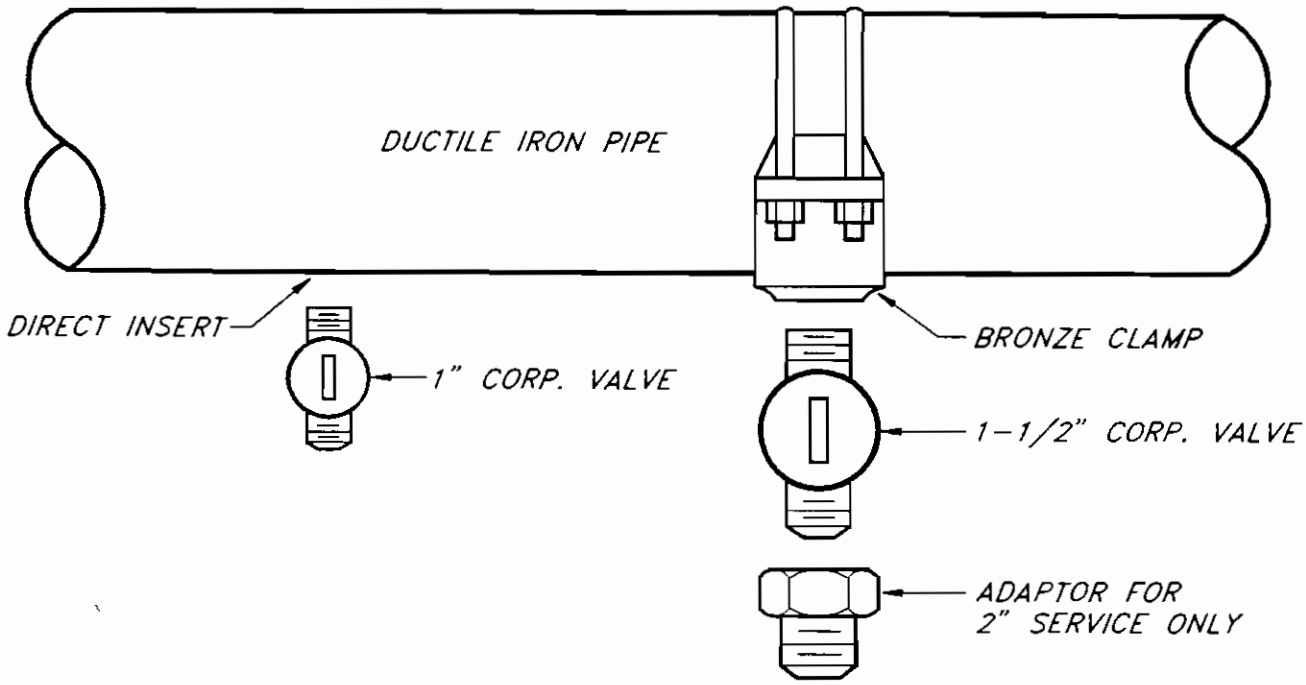

CONNECTION REQUIREMENTS – NEW MAIN		
CORP. VALVE SIZE	D.I. PIPE SIZE	CONNECTION TYPE
1" OR 1-1/2"	4" THROUGH 12"	BRONZE SERVICE SADDLE, DOUBLE STRAP
	16" AND LARGER	DIRECT INSERT

CORPORATION VALVE INSTALLATION (D.I. PIPE)

A9476

REVISIONS

NO.	DATE	INIT		APP'D

DEPARTMENT OF WATER AND POWER
WATER SYSTEM — CITY OF LOS ANGELES

	NAME	DATE	APPROVED	
DESIGNED	V. TOROMANIAN	4-92	B. WEINSTEIN	JUNE '92
DRAWN	V. TOROMANIAN	4-92		
CHECKED	C. HAMVAS	4-92		

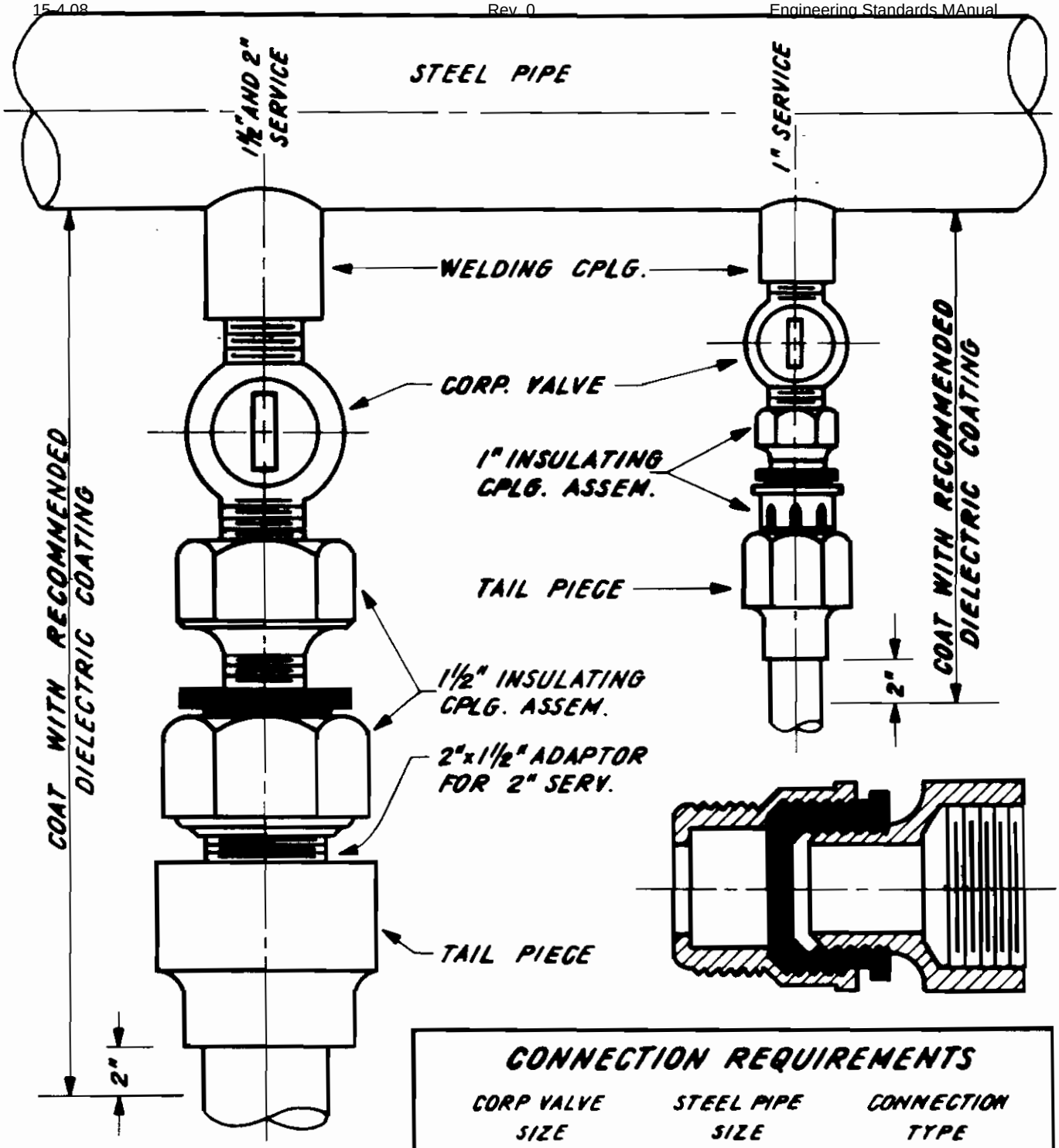

CONNECTION REQUIREMENTS

CORP VALVE SIZE	STEEL PIPE SIZE	CONNECTION TYPE
1" & 1½"	4" OR GREATER	WELDING COUPLING

CORPORATION VALVE INSTALLATION (STEEL PIPE)

A9477

NO.	DATE	IN'TL'S.	REVISIONS DESCRIPTION	APP'V'D

DEPARTMENT OF WATER AND POWER
WATER SYSTEM — CITY OF LOS ANGELES

	NAME	DATE	APPROVED
DESIGNED	L.N.	11/86	
DRAWN	A. SAVULIAN	11/86	
CHECKED	[illegible]	12/86	

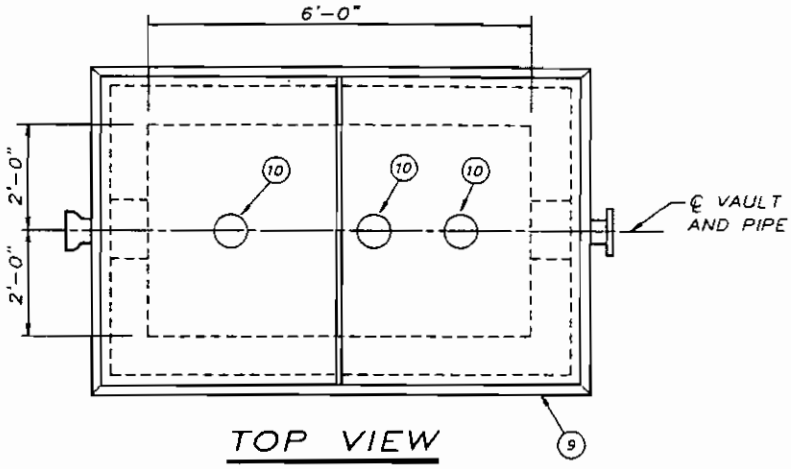

TOP VIEW

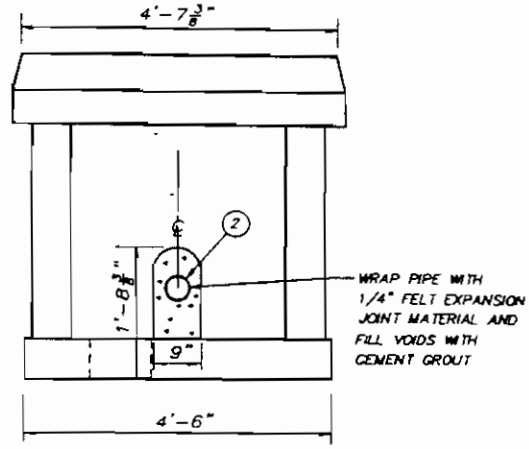

SIDE VIEW

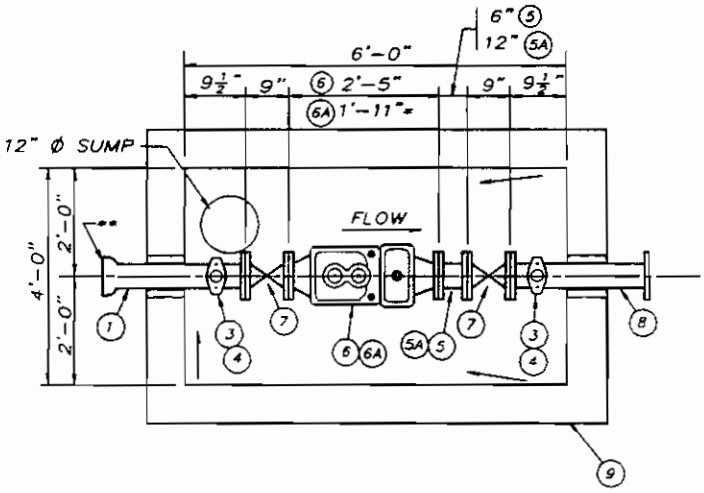

PLAN

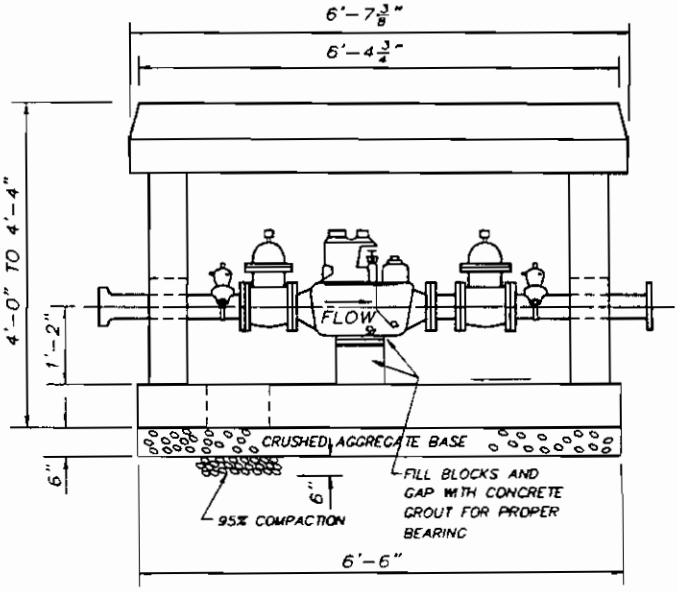

ELEVATION

NOTES:

1. CRUSHED AGGREGATE BASE MATERIAL SHALL BE IN ACCORDANCE WITH THE "STANDARD SPECIFICATIONS FOR PUBLIC WORKS CONSTRUCTION" LATEST EDITION. SUBSECTION 200-2.

* 2. 4" TURBINE METER REQUIRES 4" STRAINER(INCLUDED IN 1'-11" DIMENSION).

** 3. USE LOCKING GASKET WITH THE FLANGE/BELL ADAPTOR.

4. THIS DRAWING IS NOT TO SCALE

MATERIAL LIST

ITEM	QTY	DESCRIPTION	CODE
1	1	4" X 27" D.I R.G. FLG./BELL ADAPTOR AWWA	11-13-003
2	–	1/4" FELT EXPANSION JOINT MATERIAL	65-75-603
3	2	4" X 1-1/2" BRZ CLAMP	42-13-078
4	2	1-1/2" CORP. BALL VALVE	42-28-464
5/5A	1	4" X 6" C.I.SPOOL / 4" X 12" C I SPOOL	11-13-600/11-13-602
6/6A	1	4" COMP METER / 4" TURBINE METER *	44-84-221/44-84-532
7	2	4" X 200# C.I. FLG. GATE VALVE	12-13-989
8	1	4" X 24" C.I. SPOOL (OR OTHER OUTLET FITTING)	11-13-604
9	1	4'-0" X 6'-0" PLASTIC VAULT AND COVER	39-01-276
10	3	C.I. CENTERPIECE	39-01-190

4" DOMESTIC SERVICE IN PLASTIC VAULT (D.I. PIPE)

(SIDEWALK LOADING ONLY)

REVISIONS

NO	DATE	INIT		APP'D

DEPARTMENT OF WATER AND POWER
WATER SYSTEM CITY OF LOS ANGELES

	NAME	DATE	APPROVED
DESIGNED	L. NUNO	3-91	B. WEINSTEIN JUNE '92
DRAWN	B DONG & V.T.	3-91	
CHECKED	L. NUNO	3-92	

A9478

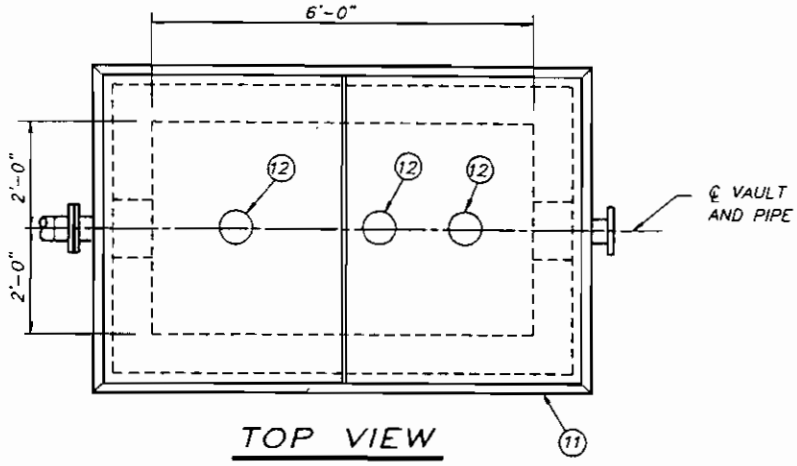

TOP VIEW

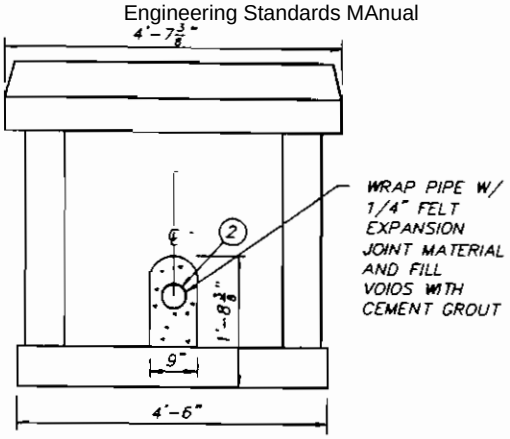

SIDE VIEW

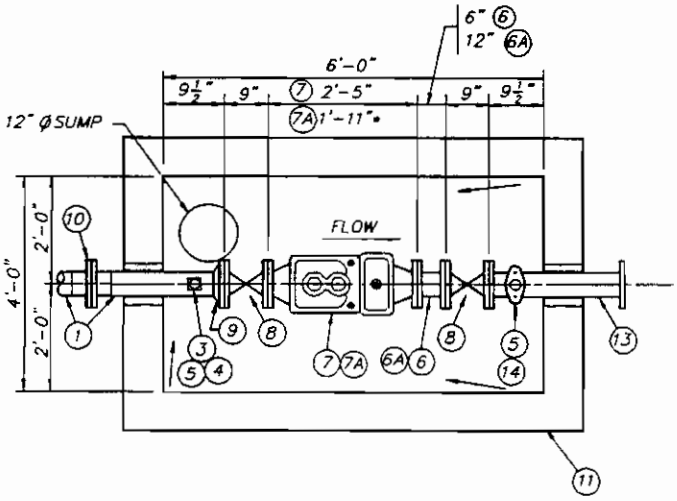

PLAN

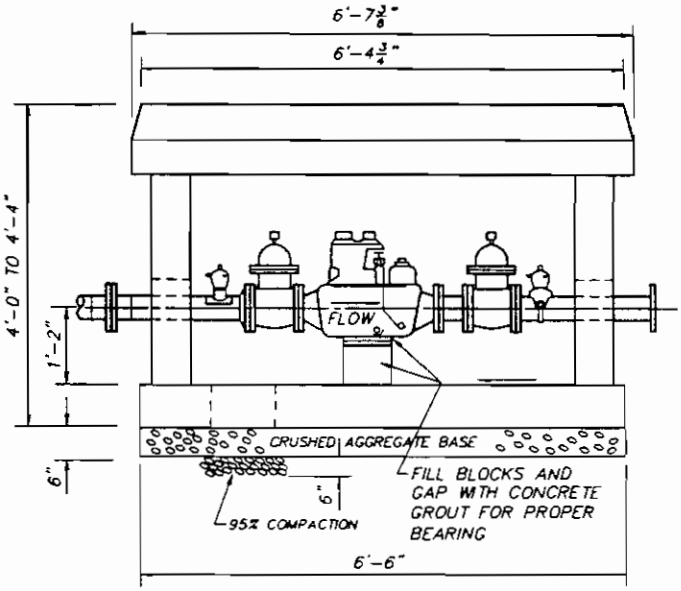

ELEVATION

NOTES:

1 CRUSHED AGGREGATE BASE MATERIAL SHALL BE IN ACCORDANCE WITH THE "STANDARD SPECIFICATIONS FOR PUBLIC WORKS CONSTRUCTION" LATEST EDITION, SUBSECTION 200-2.

* 2 4" TURBINE METER REQUIRES 4" STRAINER(INCLUDED IN 1'-11" DIMENSION).

3 THIS DRAWING IS NOT TO SCALE.

MATERIAL LIST

ITEM	QTY	DESCRIPTION	CODE
1	–	4-1/2" O.D. X 1/4" EN. UC., C.L & C. S.J., WELDED STL. PIPE	13-13-477
2	–	1/4" FELT EXPANSION JOINT MATERIAL	65-75-603
3	1	4" X 4" X 1/4" STL. WELD PAD	-------
4	1	1-1/2" STL. WELD COUPLING	13-08-171
5	2	1-1/2" CORP. BALL VALVE	42-28-464
6/6A	1	4" X 6" C.I. SPOOL / 4" X 12" C.I. SPOOL	11-13-600/11-13-602
7/7A	1	4" COMP. METER / 4" TURBINE METER *	44-84-221/44-84-532
8	2	4" X 200# C.I. FLG. GATE VALVE	12-13-989
9	1	4" X 150# STL. WELD NECK FLANGE	13-13-307
10	1	4" PRE-ASS'D INS. FLANGE TYPE II-D	13-63-298
11	1	4'-0" X 6'-0" PLASTIC VAULT AND COVER	39-01-276
12	3	C.I CENTERPIECE	39-01-190
13	1	4" X 24" C.I. SPOOL (OR OTHER OUTLET FITTING)	11-13-604
14	1	4" X 1-1/2" BRZ. CLAMP	42-13-078

4" DOMESTIC SERVICE IN PLASTIC VAULT (STL. PIPE)

(SIDEWALK LOADING ONLY)

A9479

REVISIONS

NO	DATE	INIT.		APP'D

DEPARTMENT OF WATER AND POWER
WATER SYSTEM — CITY OF LOS ANGELES

	NAME	DATE	APPROVED
DESIGNED	L. NUNO	9-90	B. WEINSTEIN BW JUNE '92
DRAWN	B. DONG & V.T	3-92	
CHECKED	L. NUNO	3-92	

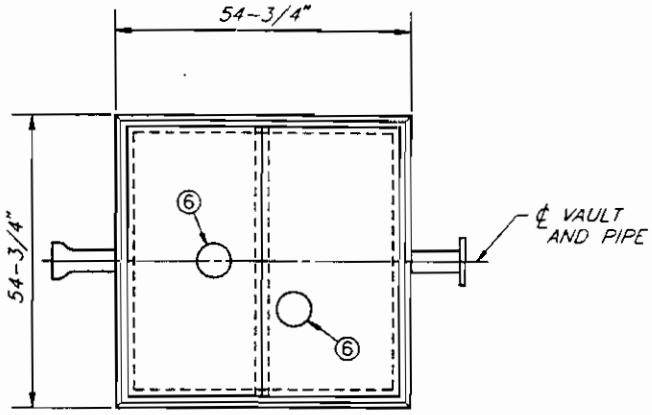

TOP VIEW

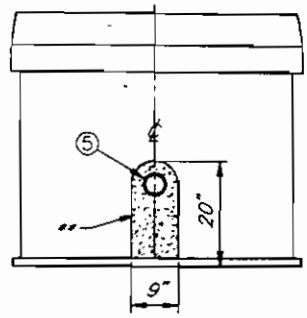

** – WRAP PIPE WITH 1/4" FELT EXPANSION JOINT MATERIAL AND FILL VOIDS WITH CEMENT GROUT

INLET VIEW

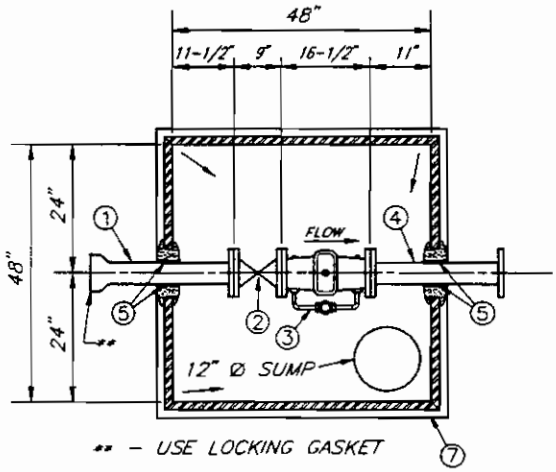

** – USE LOCKING GASKET

PLAN

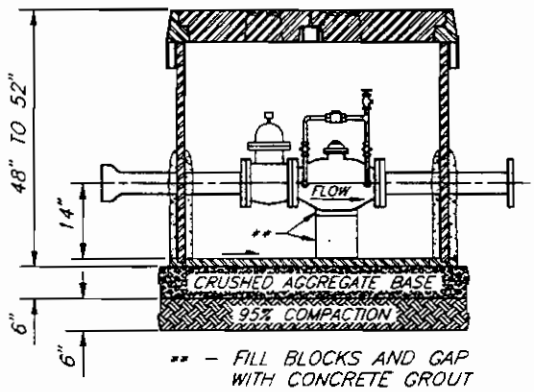

** – FILL BLOCKS AND GAP WITH CONCRETE GROUT FOR PROPER BEARING

ELEVATION

NOTES:

1. CRUSHED AGGREGATE BASE MATERIAL SHALL BE IN ACCORDANCE WITH THE "STANDARD SPECIFICATIONS FOR PUBLIC WORKS CONSTRUCTION" LATEST EDITION, SUBSECTION 200-2.
2. THIS DRAWING IS NOT TO SCALE.

MATERIAL LIST

ITEM	QTY.	DESCRIPTION	CODE
1	1	4" X 27" D.I R.G. FLG./BELL ADAPTOR AWWA	11-13-003
2	1	4" X 200# C.I. FLG. GATE VALVE	12-13-989
3	1	4" DETECTOR CHECK WITH BYPASS METER AND FITTINGS	44-13-600
4	1	4" X 24" C.I. SPOOL (OR OTHER OUTLET FITTING)	11-13-604
5	VAR	1/4" FELT EXPANSION JOINT MATERIAL	65-75-603
6	2	C.I CENTERPIECE	39-01-190
7	1	4' X 4' PLASTIC VAULT AND COVER	39-01-274

4" FIRE SERVICE IN PLASTIC VAULT (D.I. PIPE)

(SIDEWALK LOADING ONLY)

REVISIONS

NO.	DATE	INIT.		APP'D

DEPARTMENT OF WATER AND POWER
WATER SYSTEM — CITY OF LOS ANGELES

	NAME	DATE	APPROVED	
DESIGNED	L. NUNO	3-91	B. WEINSTEIN	JULY '92
DRAWN	V. TOROMANIAN	7-92		
CHECKED	C. HAMVAS	7-92		

A9480

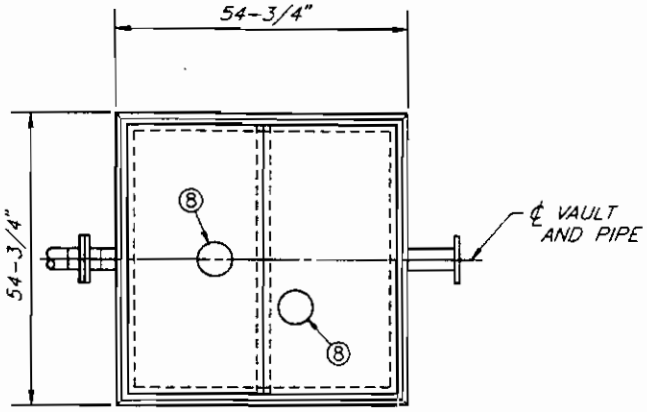

TOP VIEW

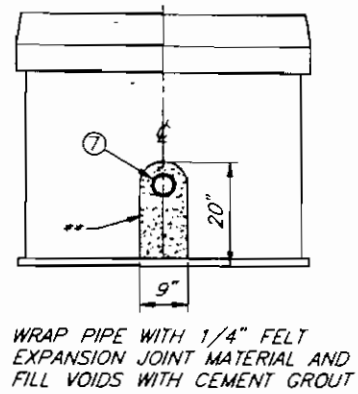

INLET VIEW

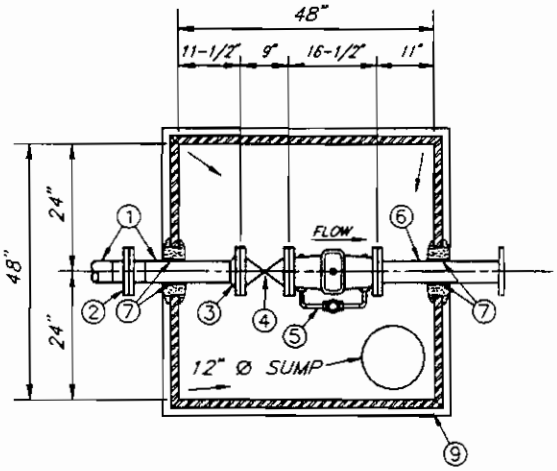

PLAN

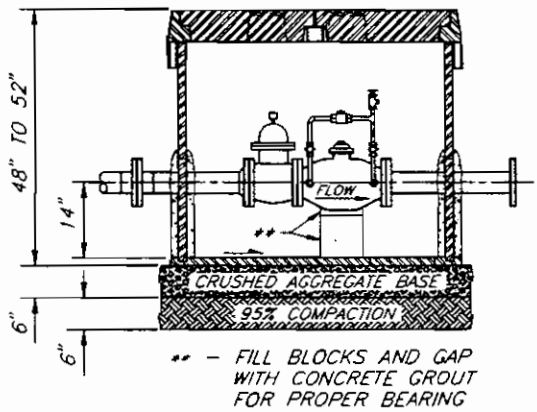

ELEVATION

NOTES:

1. CRUSHED AGGREGATE BASE MATERIAL SHALL BE IN ACCORDANCE WITH THE "STANDARD SPECIFICATIONS FOR PUBLIC WORKS CONSTRUCTION" LATEST EDITION, SUBSECTION 200-2
2. THIS DRAWING IS NOT TO SCALE.

MATERIAL LIST

ITEM	QTY.	DESCRIPTION	CODE
1	VAR.	4-1/2" O.D. X 1/4" EN UC., C.L. & C., S.J., WELDED STL. PIPE	13-13-477
2	1	4" PRE-ASSEMBLED INS. FLANGE TYPE II-D	13-63-298
3	1	4" X 150# STL. WELD NECK FLANGE	13-13-307
4	1	4" X 200# C.I. FLG GATE VALVE	12-13-989
5	1	4" DETECTOR CHECK WITH BYPASS METER AND FITTINGS	44-13-600
6	1	4" X 24" C.I SPOOL (OR OTHER OUTLET FITTING)	11-13-604
7	VAR.	1/4" FELT EXPANSION JOINT MATERIAL	65-75-603
8	2	C.I. CENTERPIECE	39-01-190
9	1	4' X 4' PLASTIC VAULT AND COVER	39-01-274

4" FIRE SERVICE IN PLASTIC VAULT (STL. PIPE)

(SIDEWALK LOADING ONLY)

REVISIONS

NO	DATE	INIT		APP'D

DEPARTMENT OF WATER AND POWER
WATER SYSTEM — CITY OF LOS ANGELES

	NAME	DATE	APPROVED
DESIGNED	L. NUNO	3-91	B. WEINSTEIN JULY '92
DRAWN	V. TOROMANIAN	7-92	
CHECKED	C. HAMVAS	7-92	

A9481

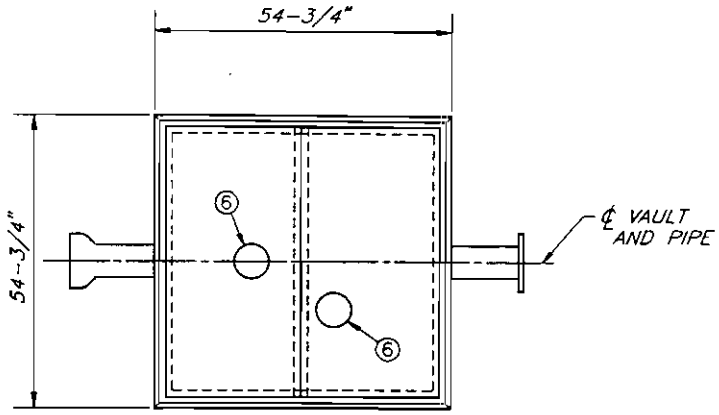

TOP VIEW

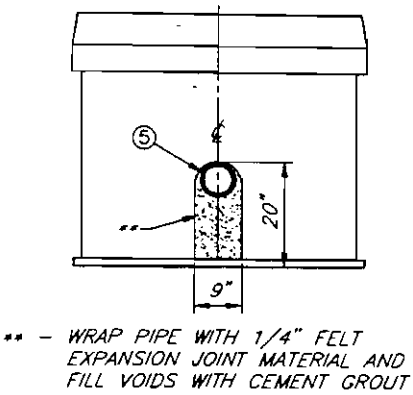

INLET VIEW

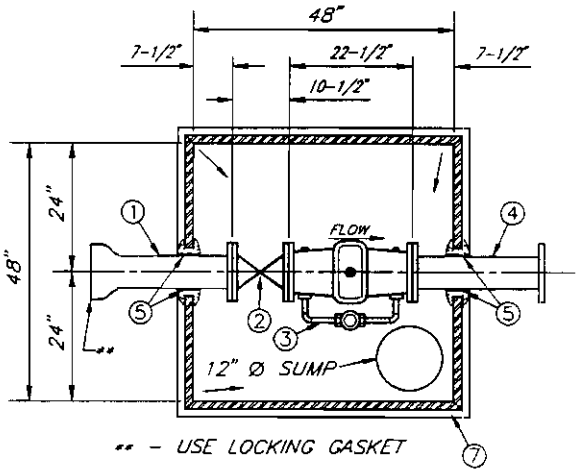

PLAN

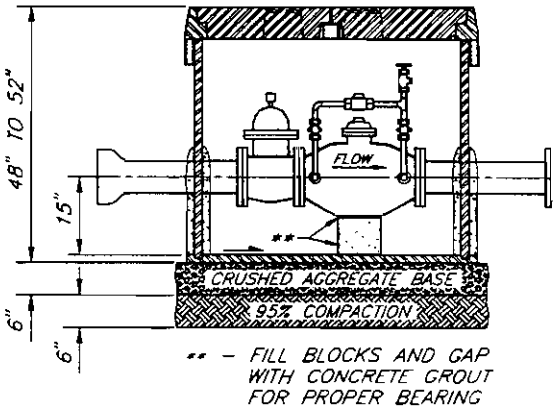

ELEVATION

NOTES:

1. CRUSHED AGGREGATE BASE MATERIAL SHALL BE IN ACCORDANCE WITH THE "STANDARD SPECIFICATIONS FOR PUBLIC WORKS CONSTRUCTION" LATEST EDITION, SUBSECTION 200-2
2. THIS DRAWING IS NOT TO SCALE.

MATERIAL LIST

ITEM	QTY	DESCRIPTION	CODE
1	1	6" X 27" D.I. R.G. FLG/BELL ADAPTOR AWWA	11-16-003
2	1	6" X 200# C.I. FLG. GATE VALVE	12-16-989
3	1	6" DETECTOR CHECK WITH BYPASS METER AND FITTINGS	44-16-600
4	1	6" X 24" C.I. SPOOL (OR OTHER OUTLET FITTING)	11-16-604
5	VAR	1/4" FELT EXPANSION JOINT MATERIAL	65-75-603
6	2	C.I. CENTERPIECE	39-01-190
7	1	4' X 4' PLASTIC VAULT AND COVER	39-01-274

6" FIRE SERVICE IN PLASTIC VAULT (D.I. PIPE)

(SIDEWALK LOADING ONLY)

REVISIONS

NO	DATE	INIT.		APP'D

DEPARTMENT OF WATER AND POWER
WATER SYSTEM — CITY OF LOS ANGELES

	NAME	DATE	APPROVED
DESIGNED	L. NUNO	3-91	B. WEINSTEIN JULY '92
DRAWN	V. TOROMANIAN	7-92	
CHECKED	C. HAMVAS	7-92	

A9482

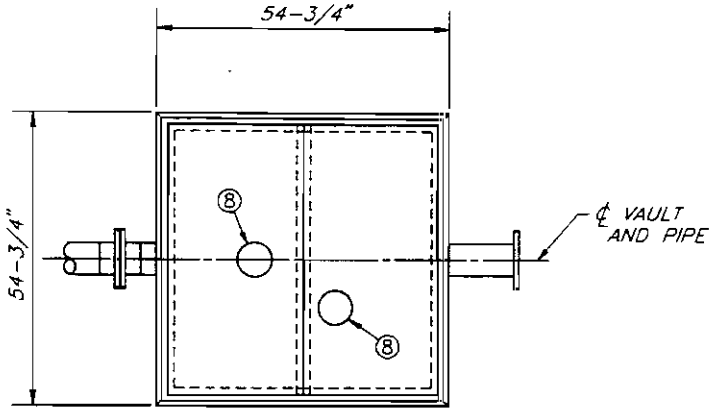

TOP VIEW

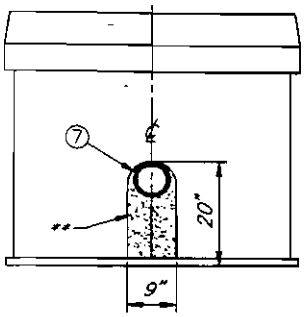

** – WRAP PIPE WITH 1/4" FELT EXPANSION JOINT MATERIAL AND FILL VOIDS WITH CEMENT GROUT

INLET VIEW

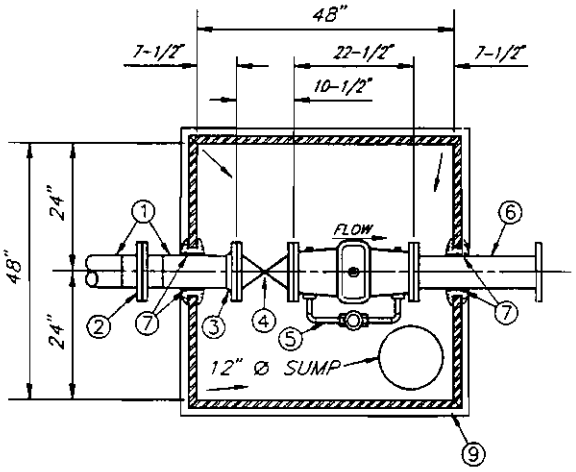

PLAN

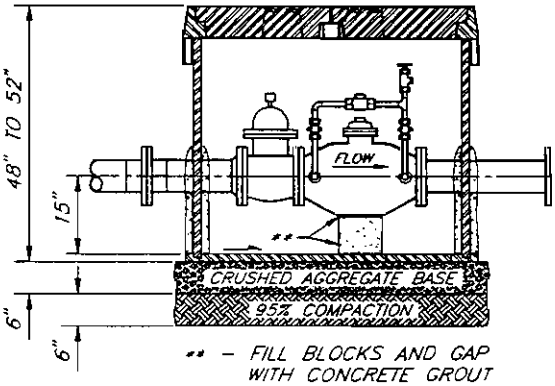

** – FILL BLOCKS AND GAP WITH CONCRETE GROUT FOR PROPER BEARING

ELEVATION

NOTES:

1. CRUSHED AGGREGATE BASE MATERIAL SHALL BE IN ACCORDANCE WITH THE "STANDARD SPECIFICATIONS FOR PUBLIC WORKS CONSTRUCTION" LATEST EDITION, SUBSECTION 200-2
2. THIS DRAWING IS NOT TO SCALE.

MATERIAL LIST

ITEM	QTY.	DESCRIPTION	CODE
1	VAR.	6-5/8" O.D. X 1/4" EN. UC., C.L & C., S.J., WELDED STL. PIPE	13-16-477
2	1	6" PRE-ASSEMBLED INS. FLANGE TYPE II-D	13-66-298
3	1	6" X 150# STL. WELD NECK FLANGE	13-16-307
4	1	6" X 200# C.I. FLG. GATE VALVE	12-16-989
5	1	6" DETECTOR CHECK WITH BYPASS METER AND FITTINGS	44-16-600
6	1	6" X 24" C.I. SPOOL (OR OTHER OUTLET FITTING)	11-16-604
7	VAR	1/4" FELT EXPANSION JOINT MATERIAL	65-75-603
8	2	C.I. CENTERPIECE	39-01-190
9	1	4' X 4' PLASTIC VAULT AND COVER	39-01-274

6" FIRE SERVICE IN PLASTIC VAULT (STL. PIPE)

(SIDEWALK LOADING ONLY)

A9483

REVISIONS

NO	DATE	INIT.		APP'D

DEPARTMENT OF WATER AND POWER
WATER SYSTEM — CITY OF LOS ANGELES

	NAME	DATE	APPROVED
DESIGNED	L. NUNO	3-91	B. WEINSTEIN JULY '92
DRAWN	V. TOROMANIAN	7-92	
CHECKED	C. HAMVAS	7-92	

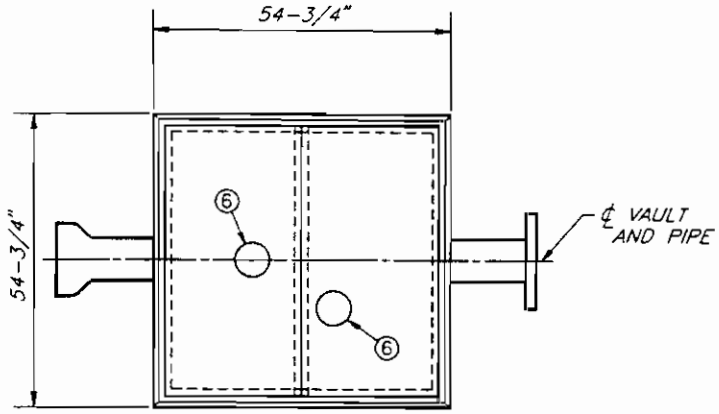

TOP VIEW

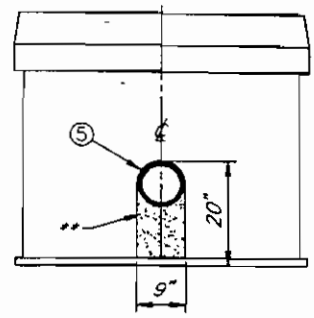

** – WRAP PIPE WITH 1/4" FELT EXPANSION JOINT MATERIAL AND FILL VOIDS WITH CEMENT GROUT

INLET VIEW

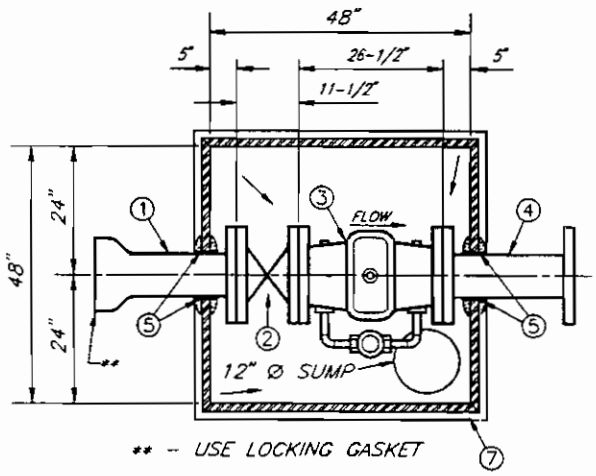

** – USE LOCKING GASKET

PLAN

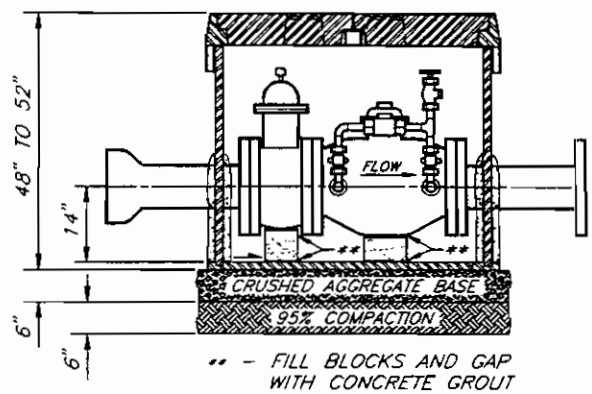

** – FILL BLOCKS AND GAP WITH CONCRETE GROUT FOR PROPER BEARING

ELEVATION

NOTES:

1. CRUSHED AGGREGATE BASE MATERIAL SHALL BE IN ACCORDANCE WITH THE "STANDARD SPECIFICATIONS FOR PUBLIC WORKS CONSTRUCTION" LATEST EDITION, SUBSECTION 200-2.
2. THIS DRAWING IS NOT TO SCALE.

MATERIAL LIST

ITEM	QTY.	DESCRIPTION	CODE
1	1	8" X 27" D.I. R.G. FLG./BELL ADAPTOR AWWA	11-17-003
2	1	8" X 200# C.I FLG. GATE VALVE	12-17-989
3	1	8" DETECTOR CHECK WITH BYPASS METER AND FITTINGS	44-17-600
4	1	8" X 24" C.I. SPOOL (OR OTHER OUTLET FITTING)	11-17-604
5	VAR.	1/4" FELT EXPANSION JOINT MATERIAL	65-75-603
6	2	C.I. CENTERPIECE	39-01-190
7	1	4' X 4' PLASTIC VAULT AND COVER	39-01-274

8" FIRE SERVICE IN PLASTIC VAULT (D.I. PIPE)

(SIDEWALK LOADING ONLY)

REVISIONS

NO	DATE	INIT		APP'D

DEPARTMENT OF WATER AND POWER
WATER SYSTEM — CITY OF LOS ANGELES

	NAME	DATE	APPROVED	
DESIGNED	L. NUNO	3-91	B. WEINSTEIN BW	JULY '92
DRAWN	V. TOROMANIAN	7-92		
CHECKED	C. HAMVAS	7-92		

A9484

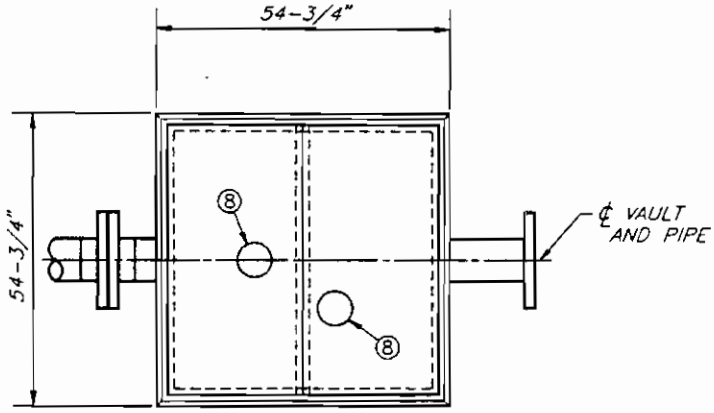

TOP VIEW

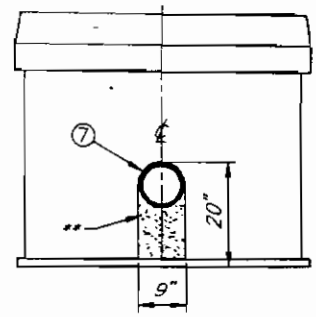

** – WRAP PIPE WITH 1/4" FELT EXPANSION JOINT MATERIAL AND FILL VOIDS WITH CEMENT GROUT

INLET VIEW

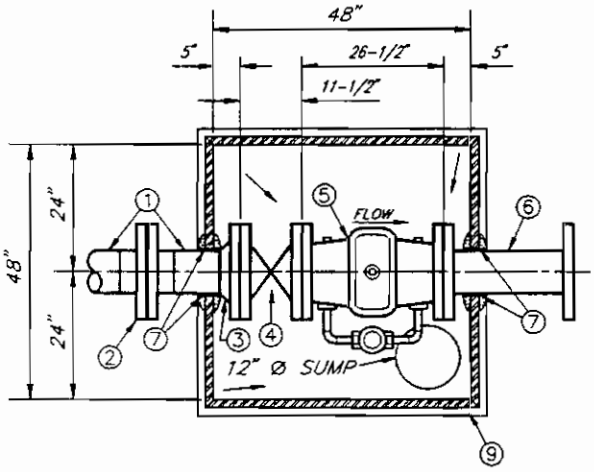

PLAN

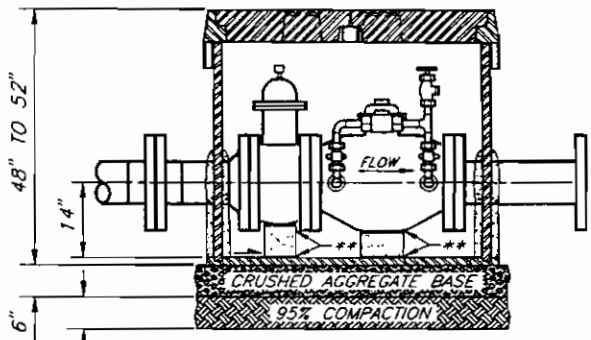

** – FILL BLOCKS AND GAP WITH CONCRETE GROUT FOR PROPER BEARING

ELEVATION

NOTES:

1. CRUSHED AGGREGATE BASE MATERIAL SHALL BE IN ACCORDANCE WITH THE "STANDARD SPECIFICATIONS FOR PUBLIC WORKS CONSTRUCTION" LATEST EDITION, SUBSECTION 200-2.
2. THIS DRAWING IS NOT TO SCALE.

MATERIAL LIST

ITEM	QTY.	DESCRIPTION	CODE
1	VAR.	8-5/8" O.D X 1/4" EN. UC, C.L. & C., S.J., WELDED STL PIPE	13-17-477
2	1	8" PRE-ASSEMBLED INS. FLANGE TYPE II-D	13-67-298
3	1	8" X 150# STL WELD NECK FLANGE	13-17-307
4	1	8" X 200# C.I. FLG GATE VALVE	12-17-989
5	1	8" DETECTOR CHECK WITH BYPASS METER AND FITTINGS	44-17-600
6	1	8" X 24" C.I. SPOOL (OR OTHER OUTLET FITTING)	11-17-604
7	VAR.	1/4" FELT EXPANSION JOINT MATERIAL	65-75-603
8	2	C.I. CENTERPIECE	39-01-190
9	1	4' X 4' PLASTIC VAULT AND COVER	39-01-274

8" FIRE SERVICE IN PLASTIC VAULT (STL. PIPE)

(SIDEWALK LOADING ONLY)

A9485

REVISIONS

NO.	DATE	INIT.		APP'D

DEPARTMENT OF WATER AND POWER
WATER SYSTEM — CITY OF LOS ANGELES

	NAME	DATE	APPROVED
DESIGNED	L. NUNO	3-91	B. WEINSTEIN JULY '92
DRAWN	V. TOROMANIAN	7-92	
CHECKED	C. HAMVAS	7-92	

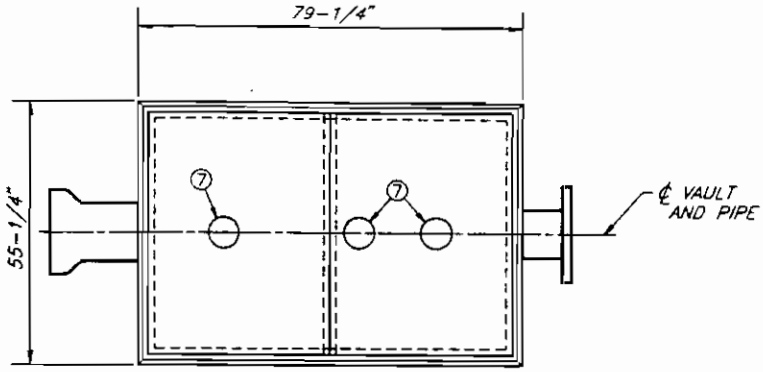

TOP VIEW

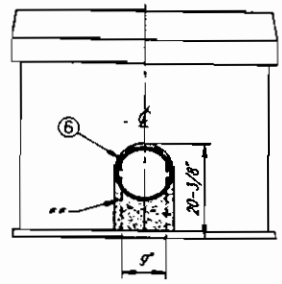

** - TRIM OPENING TO FIT PIPE, WRAP PIPE WITH 1/4" FELT EXPANSION JOINT MATERIAL AND FILL VOIDS WITH CEMENT GROUT

INLET VIEW

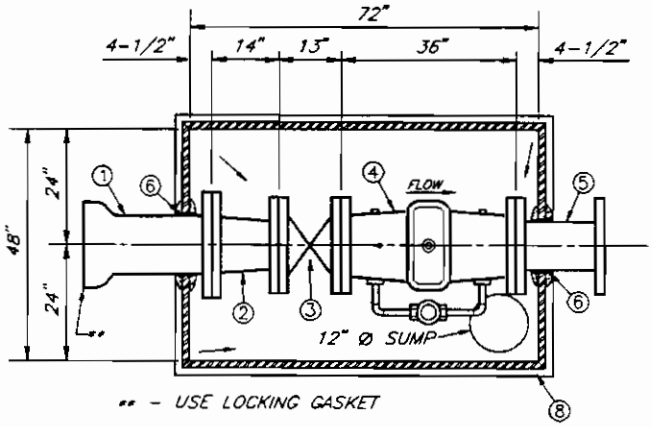

** - USE LOCKING GASKET

PLAN

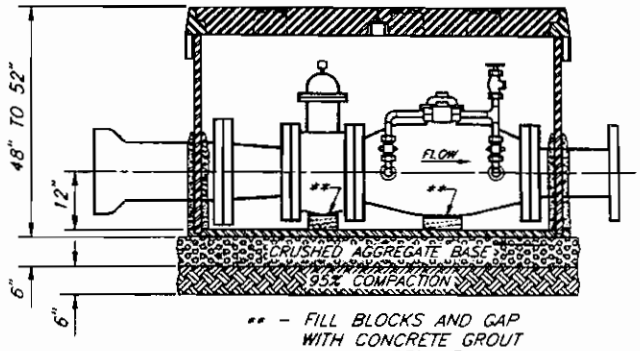

** - FILL BLOCKS AND GAP WITH CONCRETE GROUT FOR PROPER BEARING

ELEVATION

NOTES:

1. CRUSHED AGGREGATE BASE MATERIAL SHALL BE IN ACCORDANCE WITH THE "STANDARD SPECIFICATIONS FOR PUBLIC WORKS CONSTRUCTION" LATEST EDITION, SUBSECTION 200-2
2. THIS DRAWING IS NOT TO SCALE.

MATERIAL LIST

ITEM	QTY.	DESCRIPTION	CODE
1	1	12" X 27" D.I. R.G. FLG./BELL ADAPTOR AWWA	11-19-003
2	1	12" X 10" C.I. FLG TAPER REDUCER	11-19-565
3	1	10" X 200# C.I. FLG GATE VALVE	12-18-989
4	1	10" DETECTOR CHECK WITH BYPASS METER AND FITTINGS	44-18-600
5	1	10" X 18" C.I. SPOOL (OR OTHER OUTLET FITTING)	11-18-603
6	VAR.	1/4" FELT EXPANSION JOINT MATERIAL	65-75-603
7	2	C.I. CENTERPIECE	39-01-190
8	1	4' X 6' PLASTIC VAULT AND COVER	39-01-276

10" FIRE SERVICE IN PLASTIC VAULT (D.I. PIPE)

(SIDEWALK LOADING ONLY)

REVISIONS

NO	DATE	INIT		APP'D

DEPARTMENT OF WATER AND POWER
WATER SYSTEM — CITY OF LOS ANGELES

	NAME	DATE	APPROVED
DESIGNED	L. NUNO	3-91	B WEINSTEIN JULY '92
DRAWN	V. TOROMANIAN	7-92	
CHECKED	C. HAMVAS	7-92	

A9486

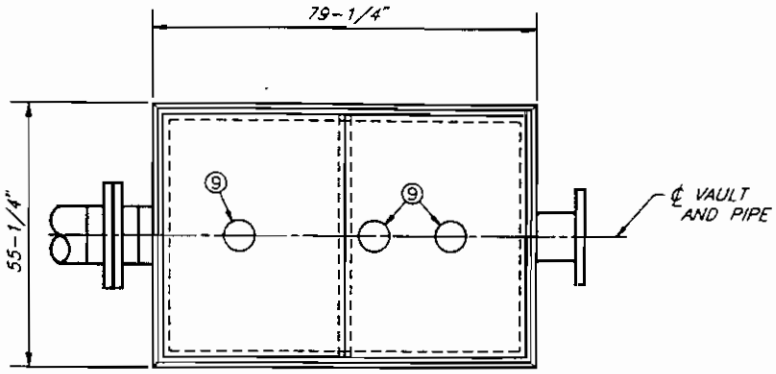

TOP VIEW

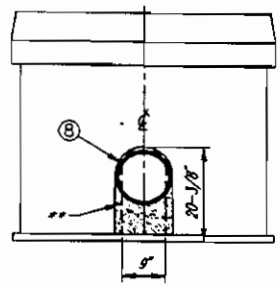

** - TRIM OPENING TO FIT PIPE, WRAP PIPE WITH 1/4" FELT EXPANSION JOINT MATERIAL AND FILL VOIDS WITH CEMENT GROUT

INLET VIEW

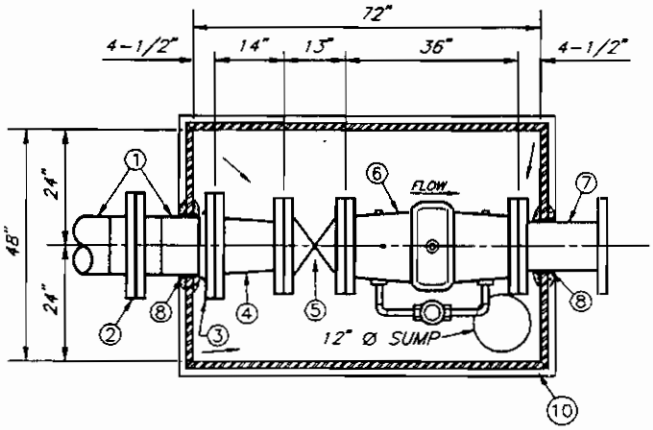

PLAN

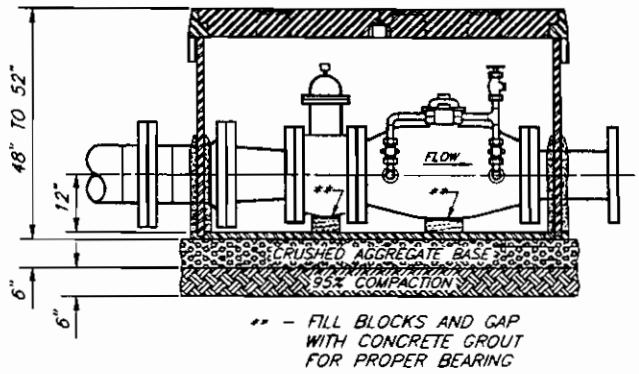

** - FILL BLOCKS AND GAP WITH CONCRETE GROUT FOR PROPER BEARING

ELEVATION

NOTES:

1. CRUSHED AGGREGATE BASE MATERIAL SHALL BE IN ACCORDANCE WITH THE "STANDARD SPECIFICATIONS FOR PUBLIC WORKS CONSTRUCTION" LATEST EDITION, SUBSECTION 200-2
2. THIS DRAWING IS NOT TO SCALE.

MATERIAL LIST

ITEM	QTY.	DESCRIPTION	CODE
1	VAR.	12-3/4" O.D. X 1/4" EN UC., C.L. & C., S.J., WELDED STL PIPE	13-19-477
2	1	12" PRE-ASSEMBLED INS. FLANGE TYPE II-D	13-69-298
3	1	12" X 150# STL. WELD NECK FLANGE	13-19-307
4	1	12" X 10" C.I. FLG. TAPER REDUCER	11-19-565
5	1	10" X 200# C.I. FLG. GATE VALVE	12-18-989
6	1	10" DETECTOR CHECK WITH BYPASS METER AND FITTINGS	44-18-600
7	1	10" X 18" C.I. SPOOL (OR OTHER OUTLET FITTING)	11-18-603
8	VAR.	1/4" FELT EXPANSION JOINT MATERIAL	65-75-603
9	2	C.I. CENTERPIECE	39-01-190
10	1	4' X 6' PLASTIC VAULT AND COVER	39-01-276

10" FIRE SERVICE IN PLASTIC VAULT (STL. PIPE)

(SIDEWALK LOADING ONLY)

REVISIONS

NO.	DATE	INIT		APP'D

DEPARTMENT OF WATER AND POWER
WATER SYSTEM — CITY OF LOS ANGELES

	NAME	DATE	APPROVED
DESIGNED	L. NUNO	3-91	B. WEINSTEIN JULY '92
DRAWN	V. TOROMANIAN	7-92	
CHECKED	C. HAMVAS	7-92	

A9487

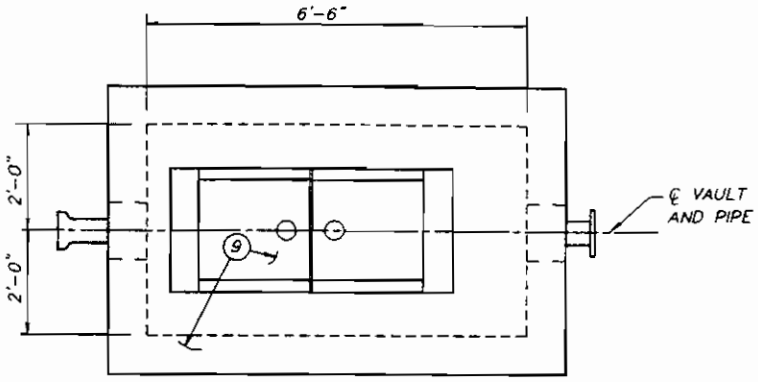

TOP VIEW

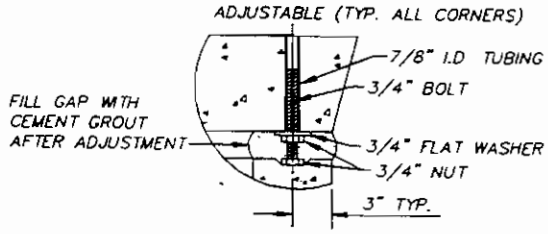

DETAIL

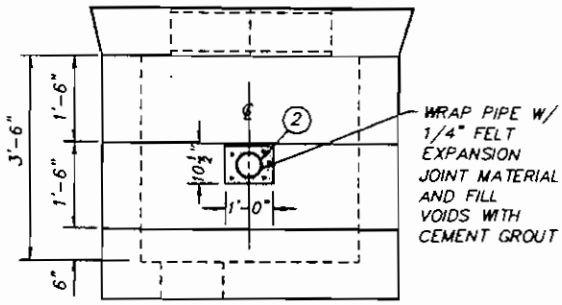

INLET VIEW

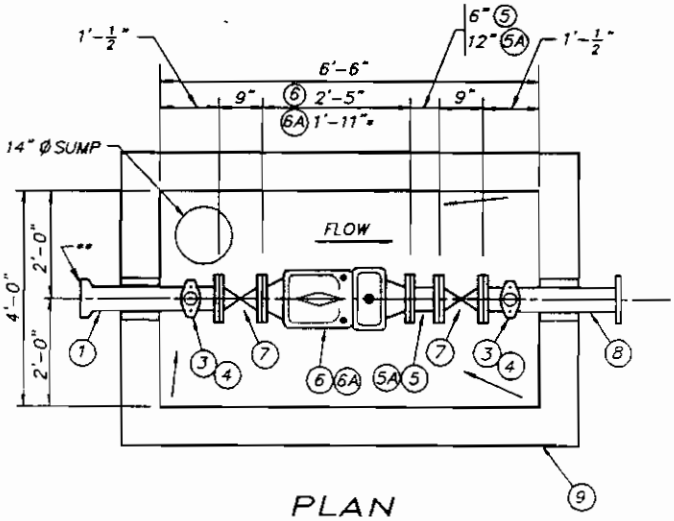

PLAN

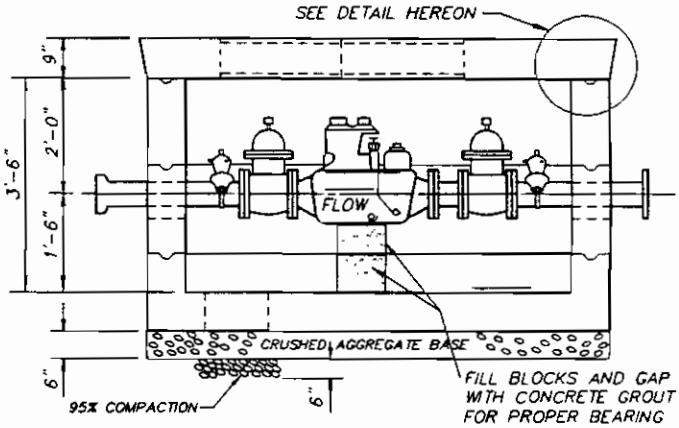

ELEVATION

NOTES:

1. CRUSHED AGGREGATE BASE MATERIAL SHALL BE IN ACCORDANCE WITH THE "STANDARD SPECIFICATIONS FOR PUBLIC WORKS CONSTRUCTION" LATEST EDITION, SUBSECTION 20D-2.

2 VAULT AND ACCESSORIES SHALL MEET THE DEPARTMENT'S LATEST "SPECIFICATIONS FOR PRECAST CONCRETE SUBSTRUCTURES AND ACCESSORIES".

*3 4" TURBINE METER REQUIRES 4" STRAINER (INCLUDED IN 1'-11" DIMENSION)

**4 USE LOCKING GASKET WITH THE FLANGE/BELL ADAPTOR.

5. THIS DRAWING IS NOT TO SCALE

MATERIAL LIST

ITEM	QTY	DESCRIPTION	CODE
1	1	4" X 27" D.I. R.G. FLG./BELL ADAPTOR AWWA	11-13-003
2	–	1/4" FELT EXPANSION JOINT MATERIAL	65-75-603
3	2	4" X 1-1/2" BRZ. CLAMP	42-13-078
4	2	1-1/2" CORP. BALL VALVE	42-28-464
5/5A	1	4" X 6" C.I. SPOOL / 4" X 12" C.I SPOOL	11-13-600/11-13-602
6/6A	1	4" COMP. METER / 4" TURBINE METER *	44-84-221/44-84-532
7	2	4" X 200# C.I FLG. GATE VALVE	12-13-989
8	1	4" X 24" C.I SPOOL (OR OTHER OUTLET FITTING)	11-13-604
9	1	4'-0" X 6'-6" PRECAST CONCRETE VAULT WITH 1" #3 STEEL HINGED COVER (DWP DWG C51B1)	39-01-245

4" DOMESTIC SERVICE IN PRECAST CONCRETE VAULT (D.I. PIPE)

(TRAFFIC LOADING)

REVISIONS

NO	DATE	INIT.		APP'D

DEPARTMENT OF WATER AND POWER
WATER SYSTEM — CITY OF LOS ANGELES

	NAME	DATE	APPROVED	
DESIGNED	L. NUNO	3-91	B. WEINSTEIN	JUNE '92
DRAWN	B DONG & V.T.	3-92		
CHECKED	L. NUNO	3-92		

A9488

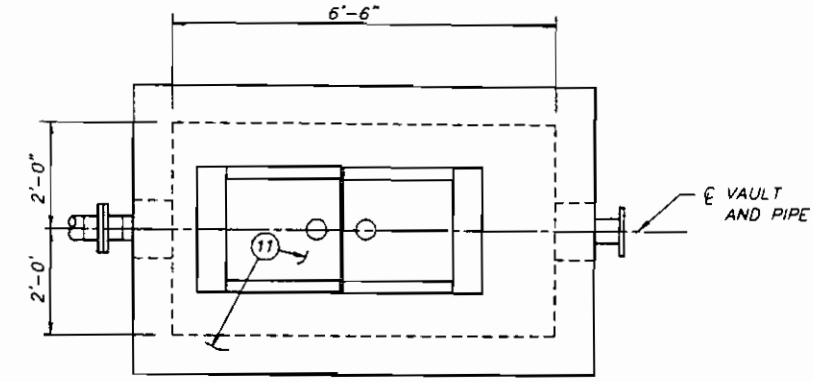

TOP VIEW

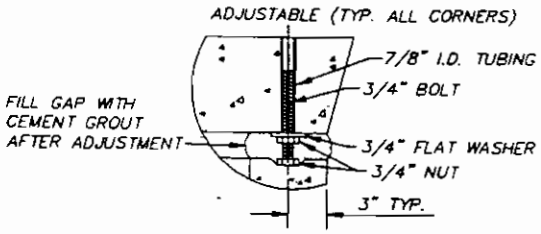

DETAIL

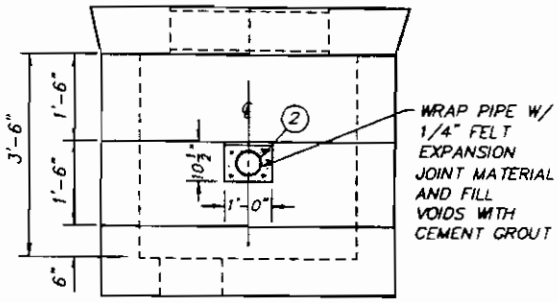

INLET VIEW

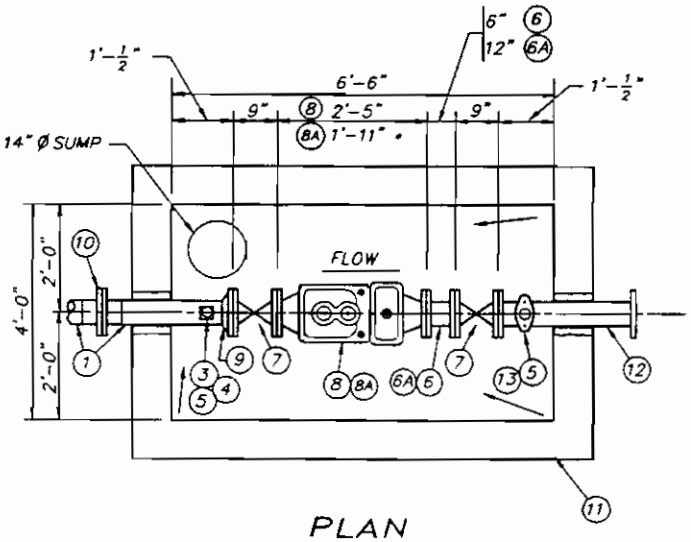

PLAN

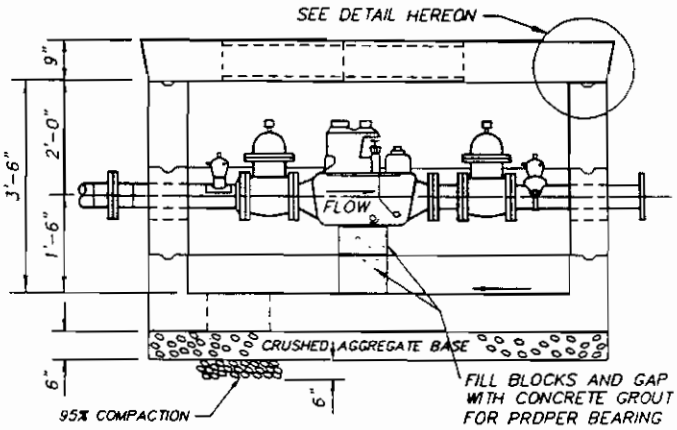

ELEVATION

NOTES:

1. CRUSHED AGGREGATE BASE MATERIAL SHALL BE IN ACCORDANCE WITH THE "STANDARD SPECIFICATIONS FOR PUBLIC WORKS CONSTRUCTION" LATEST EDITION, SUBSECTION 200-2.

2 VAULT AND ACCESSORIES SHALL MEET THE DEPARTMENT'S LATEST "SPECIFICATIONS FOR PRECAST CONCRETE SUBSTRUCTURES AND ACCESSORIES"

*3 4" TURBINE METER REQUIRES 4" STRAINER (INCLUDED IN 1'-11" DIMENSION)

4 THIS DRAWING IS NOT TO SCALE.

MATERIAL LIST

ITEM	QTY	DESCRIPTION	CODE
1	–	4-1/2" O.D. X 1/4" EN. UC., C.L. & C., S.J., W. STL. PIPE	13-13-477
2	-	1/4" FELT EXPANSION JOINT MATERIAL	65-75-603
3	1	4" X 4" X 1/4" STL. WELD PAD	------
4	1	1-1/2" STL. WELD COUPLING	13-08-171
5	2	1-1/2" CORP. BALL VALVE	42-28-464
6/6A	1	4" X 6" C.I. SPOOL / 4" X 12" C.I. SPOOL	11-13-600/11-13-602
7	2	4" X 200# C.I. FLG GATE VALVE	12-13-989
8/8A	1	4" COMP. METER / 4" TURBINE METER *	44-84-221/44-84-532
9	1	4" X 150# STL. WELD NECK FLANGE	13-13-307
10	1	4" PRE-ASS'D INS. FLANGE TYPE II-D	13-63-298
11	1	4'-0" X 6'-6" PRECAST CONCRETE VAULT WITH 1" #3 STEEL HINGED COVER (DWP DWG. C5181)	39-01-245
12	1	4" X 24" C.I. SPOOL (OR OTHER OUTLET FITTING)	11-13-604
13	1	4" X 1-1/2" BRZ. CLAMP	42-13-078

4" DOMESTIC SERVICE IN PRECAST CONCRETE VAULT (STL. PIPE)

(TRAFFIC LOADING)

A9489

REVISIONS

NO	DATE	INIT		APP'D

DEPARTMENT OF WATER AND POWER
WATER SYSTEM — CITY OF LOS ANGELES

	NAME	DATE	APPROVED
DESIGNED	L. NUNO	9-90	B. WEINSTEIN — JUNE '92
DRAWN	B. DONG & V.T.	3-92	
CHECKED	L. NUNO	3-92	

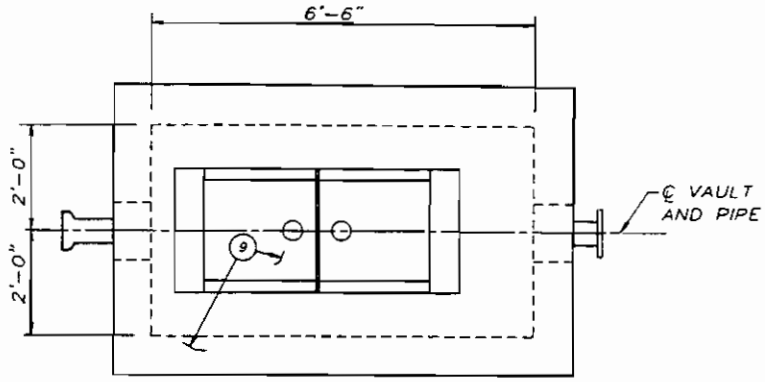

TOP VIEW

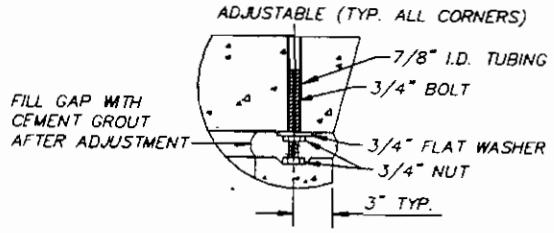

DETAIL

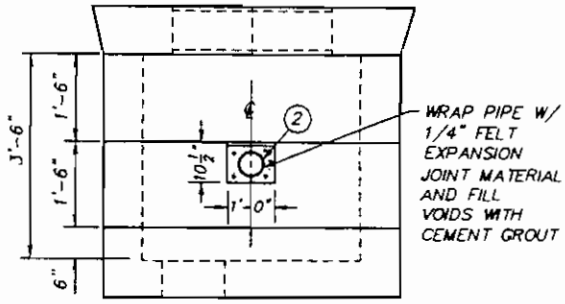

INLET VIEW

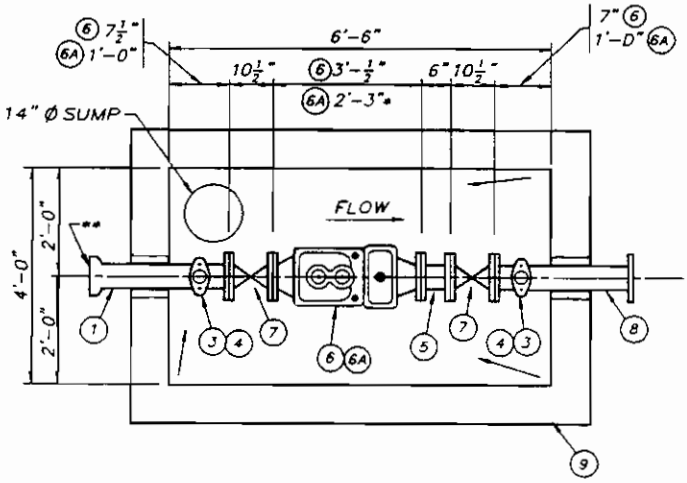

PLAN

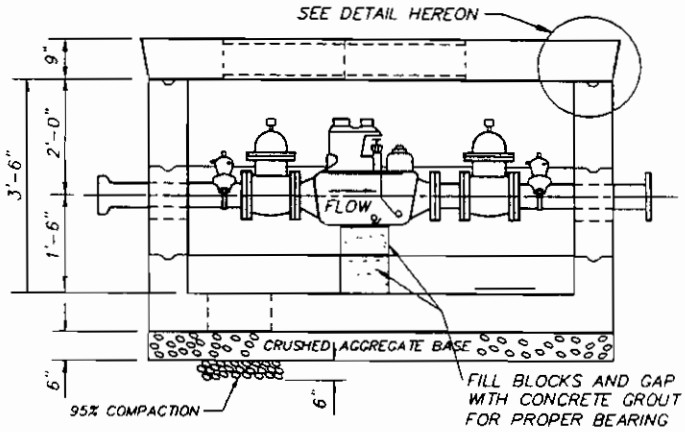

ELEVATION

NOTES:

1. CRUSHED AGGREGATE BASE MATERIAL SHALL BE IN ACCORDANCE WITH THE "STANDARD SPECIFICATIONS FOR PUBLIC WORKS CONSTRUCTION" LATEST EDITION, SUBSECTION 200-2
2. VAULT AND ACCESSORIES SHALL MEET THE DEPARTMENT'S LATEST "SPECIFICATIONS FOR PRECAST CONCRETE SUBSTRUCTURES AND ACCESSORIES"
3. * 6" TURBINE METER REQUIRES 6" STRAINER (INCLUDED IN 2'-3" DIMENSION).
4. ** USE LOCKING GASKET WITH THE FLANGE/BELL ADAPTOR
5. THIS DRAWING IS NOT TO SCALE.

MATERIAL LIST

ITEM	QTY	DESCRIPTION	CODE
1	1	6" X 27" D.I. R.G. FLG./BELL ADAPTOR AWWA	11-16-003
2	–	1/4" FELT EXPANSION JOINT MATERIAL	65-75-603
3	2	6" X 1-1/2" BRZ. CLAMP	42-16-078
4	2	1-1/2" CORP BALL VALVE	42-28-464
5	1	6" X 6" C.I. SPOOL	11-16-600
6/6A	1	6" COMP. METER / 6" TURBINE METER *	44-84-521/44-84-533
7	2	6" X 200# C.I. FLG. GATE VALVE	12-16-989
8	1	6" X 24" C.I SPOOL (OR OTHER OUTLET FITTING)	11-16-604
9	1	4'-0" X 6'-6" PRECAST CONCRETE VAULT WITH 1" #3 STEEL HINGED COVER (DWP DWG. C5181)	39-D1-245

6" DOMESTIC SERVICE IN PRECAST CONCRETE VAULT (D.I. PIPE)

(TRAFFIC LOADING)

REVISIONS

NO	DATE	INIT		APP'D

DEPARTMENT OF WATER AND POWER
WATER SYSTEM — CITY OF LOS ANGELES

	NAME	DATE	APPROVED	
DESIGNED	L. NUNO	9-90	B. WEINSTEIN BW	JUNE '92
DRAWN	B. DONG & V.T.	3-92		
CHECKED	L. NUNO	3-92		

A9490

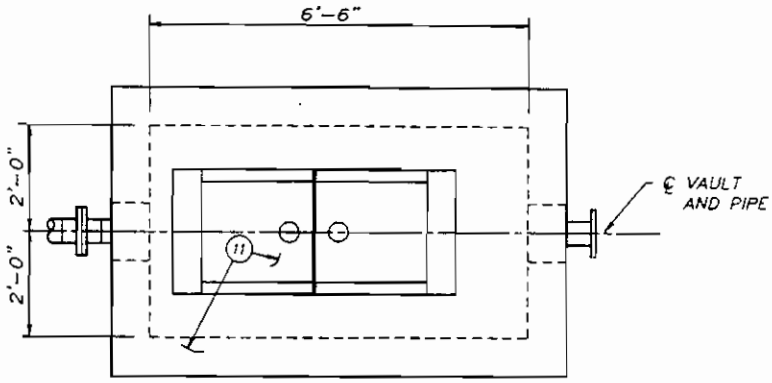

TOP VIEW

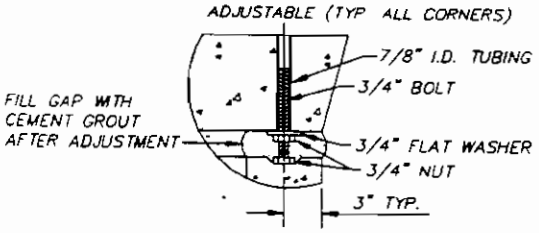

DETAIL

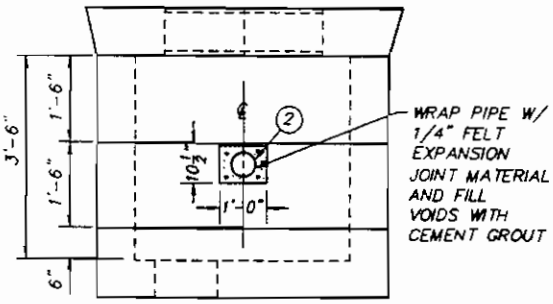

INLET VIEW

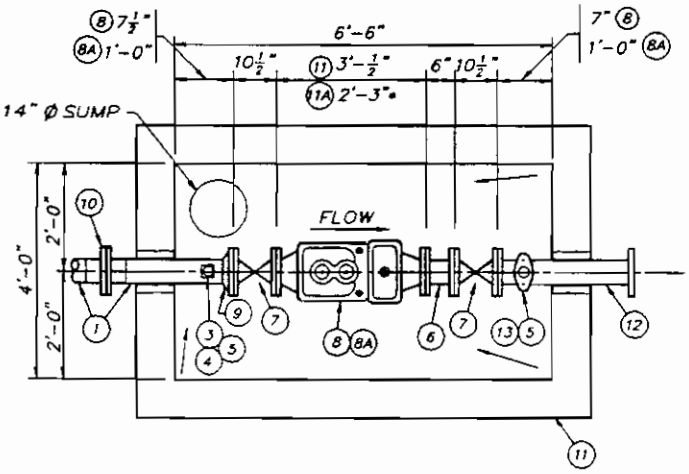

PLAN

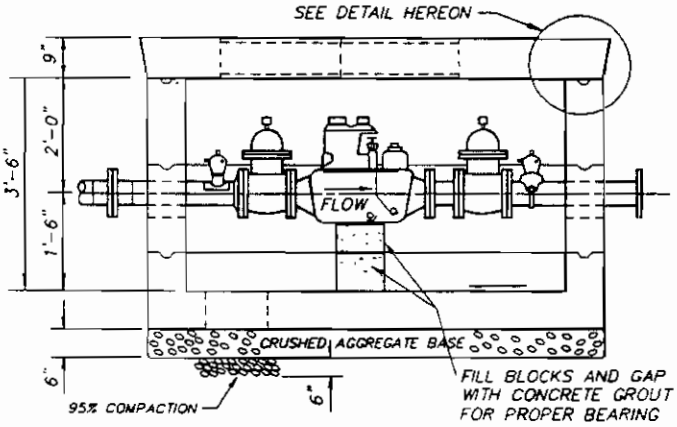

ELEVATION

NOTES:

1. CRUSHED AGGREGATE BASE MATERIAL SHALL BE IN ACCORDANCE WITH THE "STANDARD SPECIFICATIONS FOR PUBLIC WORKS CONSTRUCTION" LATEST EDITION, SUBSECTION 200-2.
2. VAULT AND ACCESSORIES SHALL MEET THE DEPARTMENT'S LATEST "SPECIFICATIONS FOR PRECAST CONCRETE SUBSTRUCTURES AND ACCESSORIES".

* 3 6" TURBINE METER REQUIRES 6" STRAINER (INCLUDED IN 2'-3" DIMENSION).

4 THIS DRAWING IS NOT TO SCALE.

MATERIAL LIST

ITEM	QTY	DESCRIPTION	CODE
1	–	6-5/8" O D X 1/4" EN. UC., C.L & C. S J. W STL PIPE	13-16-477
2	–	1/4" FELT EXPANSION JOINT MATERIAL	65-75-603
3	1	4" X 4"X 1/4" STL. WELD PAD	--------
4	1	1-1/2" STL WELD COUPLING	13-08-171
5	2	1-1/2" CORP BALL VALVE	42-28-464
6	1	6" X 6" C.I SPOOL	11-16-600
7	2	6" X 200# C.I FLG. GATE VALVE	12-16-989
8/8A	1	6" COMP METER / 6" TURBINE METER *	44-84-521/44-84-533
9	1	6" X 150# STL WELD NECK FLANGE	13-16-307
10	1	6" PRE-ASS'D INS FLANGE TYPE II-D	13-66-298
11	1	4'-0" X 6'-6" PRECAST CONCRETE VAULT WITH 1" #3 STEEL HINGED COVER (DWP DWG. C5181)	39-01-245
12	1	6" X 24" C.I. SPOOL (OR OTHER OUTLET FITTING)	11-16-604
13	1	6" X 1-1/2" BRZ. CLAMP	42-16-078

6" DOMESTIC SERVICE IN PRECAST CONCRETE VAULT (STL. PIPE)

(TRAFFIC LOADING)

A9491

REVISIONS				
NO.	DATE	INIT		APP'D

DEPARTMENT OF WATER AND POWER
WATER SYSTEM — CITY OF LOS ANGELES

	NAME	DATE	APPROVED	
DESIGNED	L. NUNO	9-90	B. WEINSTEIN	JUNE '92
DRAWN	B. DONG & V.T.	3-92		
CHECKED	L. NUNO	3-92		

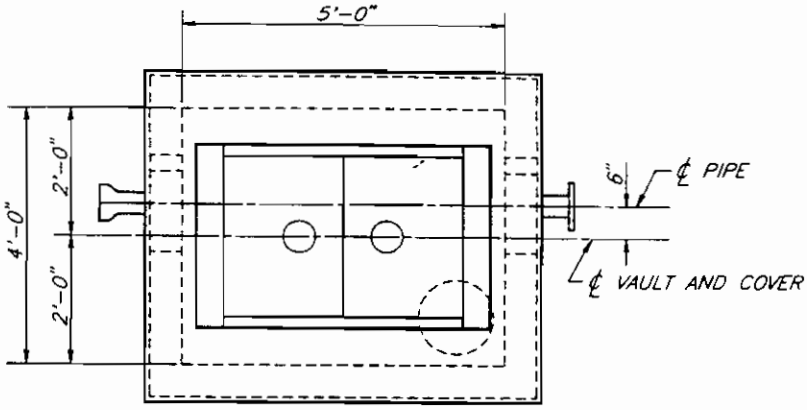

TOP VIEW

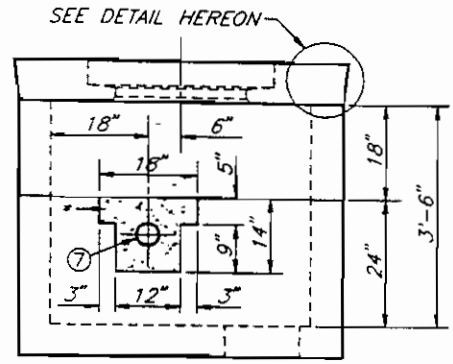

* – WRAP PIPE WITH 1/4" FELT EXPANSION JOINT MATERIAL AND FILL VOIDS WITH CEMENT GROUT

INLET VIEW

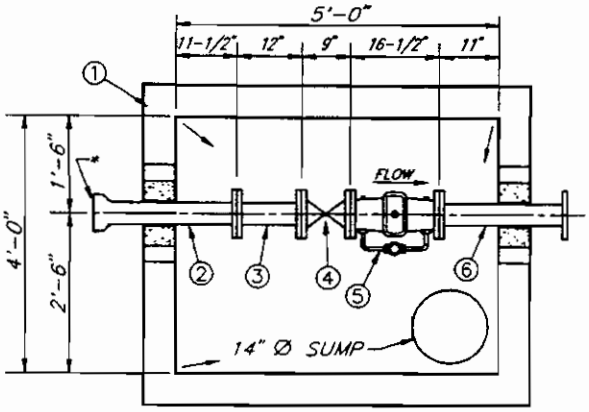

* – USE LOCKING GASKET

PLAN

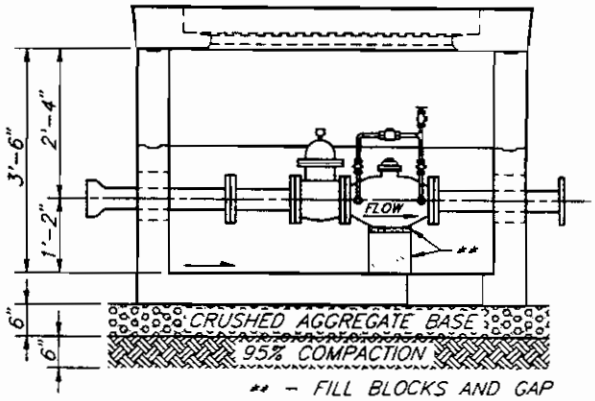

** – FILL BLOCKS AND GAP WITH CONCRETE GROUT FOR PROPER BEARING

ELEVATION

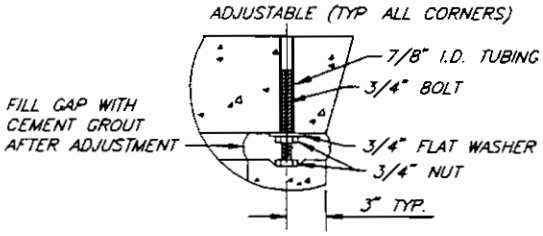

DETAIL

NOTES:

1. CRUSHED AGGREGATE BASE MATERIAL SHALL BE IN ACCORDANCE WITH THE "STANDARD SPECIFICATIONS FOR PUBLIC WORKS CONSTRUCTION" LATEST EDITION, SUBSECTION 200-2.
2. VAULT AND ACCESSORIES SHALL MEET THE DEPARTMENT'S LATEST "SPECIFICATIONS FOR PRECAST CONCRETE SUBSTRUCTURES AND ACCESSORIES".
3. THIS DRAWING IS NOT TO SCALE.

MATERIAL LIST

ITEM	QTY.	DESCRIPTION	CODE
1	1	4'-0" X 5'-0" PRECAST CONCRETE VAULT WITH 1" #3 STEEL HINGED COVER (DWP DWG. C5189)	39-01-244
2	1	4" X 27" D I R.G. FLG/BELL ADAPTOR AWWA	11-13-003
3	1	4" X 12" C.I. SPOOL	11-13-602
4	1	4" X 200# C I FLG. GATE VALVE	12-13-989
5	1	4" DETECTOR CHECK WITH BYPASS METER AND FITTINGS	44-13-600
6	1	4" X 24" C.I. SPOOL (OR OTHER OUTLET FITTING)	11-13-604
7	VAR.	1/4" FELT EXPANSION JOINT MATERIAL	65-75-603

4" FIRE SERVICE IN PRECAST CONCRETE VAULT (D.I. PIPE)

(TRAFFIC LOADING)

A9492

REVISIONS

NO.	DATE	INIT.		APP'D

DEPARTMENT OF WATER AND POWER
WATER SYSTEM — CITY OF LOS ANGELES

	NAME	DATE	APPROVED	
DESIGNED	L. NUNO	3-91	B. WEINSTEIN	JUNE '92
DRAWN	V. TOROMANIAN	4-92		
CHECKED	C. HAMVAS	4-92		

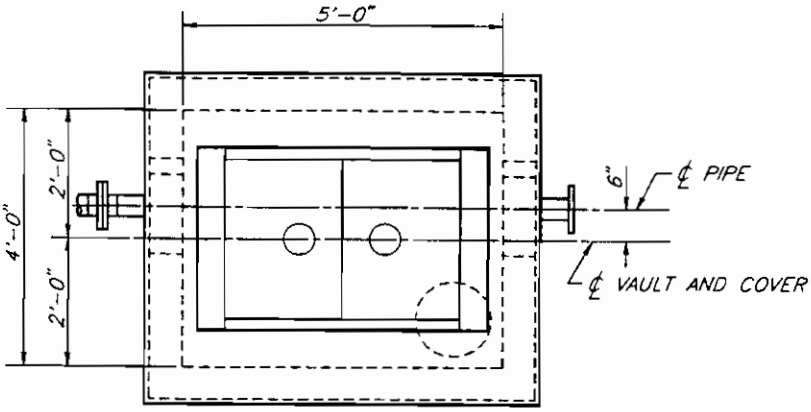

TOP VIEW

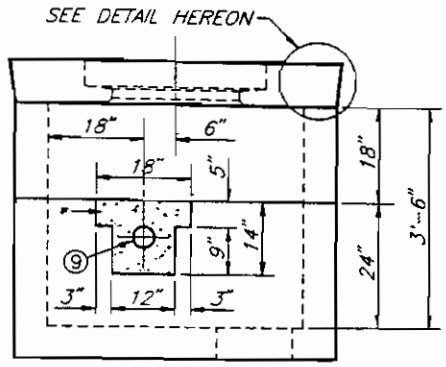

* – WRAP PIPE WITH 1/4" FELT EXPANSION JOINT MATERIAL AND FILL VOIDS WITH CEMENT GROUT

INLET VIEW

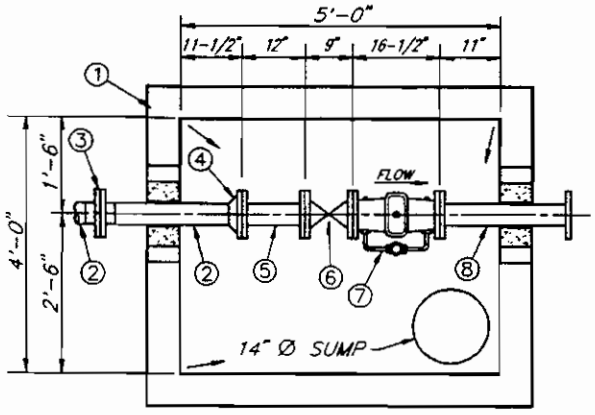

PLAN

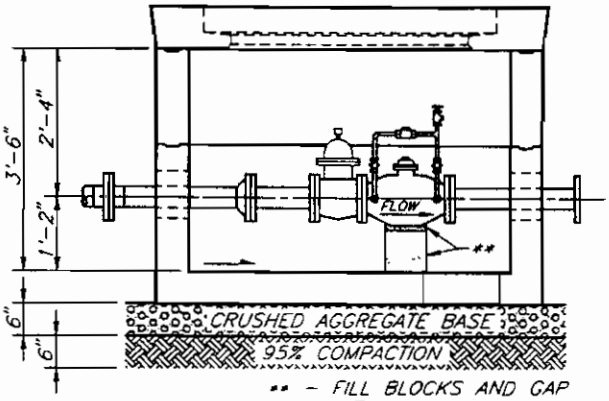

** – FILL BLOCKS AND GAP WITH CONCRETE GROUT FOR PROPER BEARING

ELEVATION

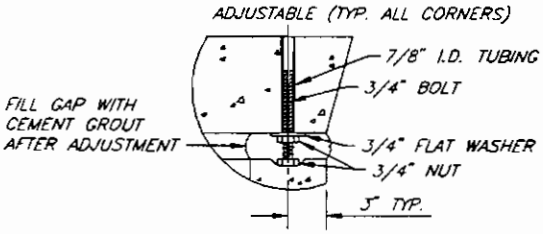

DETAIL

NOTES:

1. CRUSHED AGGREGATE BASE MATERIAL SHALL BE IN ACCORDANCE WITH THE "STANDARD SPECIFICATIONS FOR PUBLIC WORKS CONSTRUCTION" LATEST EDITION, SUBSECTION 200-2.
2. VAULT AND ACCESSORIES SHALL MEET THE DEPARTMENT'S LATEST "SPECIFICATIONS FOR PRECAST CONCRETE SUBSTRUCTURES AND ACCESSORIES".
3. THIS DRAWING IS NOT TO SCALE.

MATERIAL LIST

ITEM	QTY.	DESCRIPTION	CODE
1	1	4'-0" X 5'-0" PRECAST CONCRETE VAULT WITH 1" #3 STEEL HINGED COVER (OWP DWG. C5189)	39-01-244
2	VAR.	4-1/2" O.D. X 1/4" EN UC., C.L. & C., S.J., WELDED STEEL PIPE	13-13-477
3	1	4" PRE-ASSEMBLED INS. FLANGE TYPE II-D	13-63-298
4	1	4" X 150# STEEL WELD NECK FLANGE	13-13-307
5	1	4" X 12" C.I. SPOOL	11-13-602
6	1	4" X 200# C.I. FLG. GATE VALVE	12-13-989
7	1	4" DETECTOP CHECK WITH BYPASS METER AND FITTINGS	44-13-600
8	1	4" X 24" C.I. SPOOL (OR OTHER OUTLET FITTING)	11-13-604
9	VAR	1/4" FELT EXPANSION JOINT MATERIAL	65-75-603

4" FIRE SERVICE IN PRECAST CONCRETE VAULT (STL. PIPE)

(TRAFFIC LOADING)

A9493

REVISIONS

NO.	DATE	INIT.		APP'D

DEPARTMENT OF WATER AND POWER
WATER SYSTEM — CITY OF LOS ANGELES

	NAME	DATE	APPROVED
DESIGNED	L. NUNO	3-91	B. WEINSTEIN JUNE '92
DRAWN	V. TOROMANIAN	4-92	
CHECKED	C. HAMVAS	4-92	

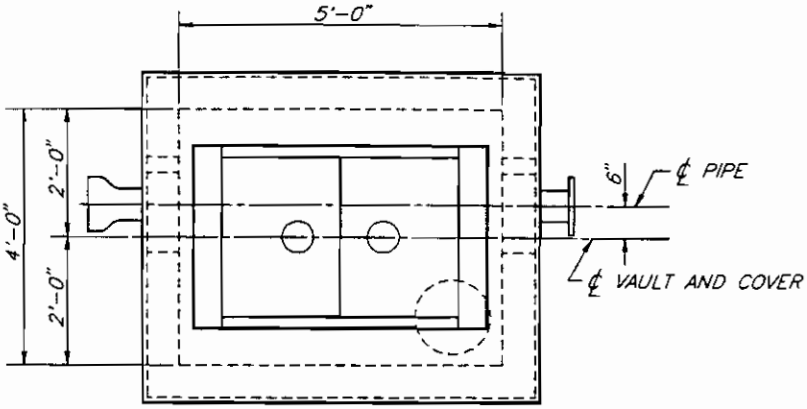

TOP VIEW

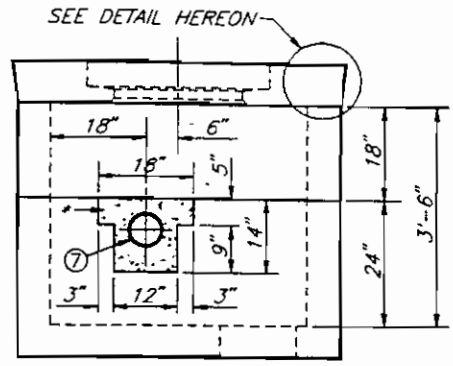

* – WRAP PIPE WITH 1/4" FELT EXPANSION JOINT MATERIAL AND FILL VOIDS WITH CEMENT GROUT

INLET VIEW

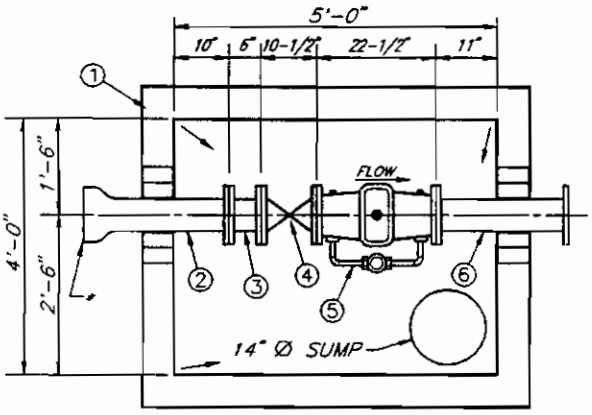

* – USE LOCKING GASKET

PLAN

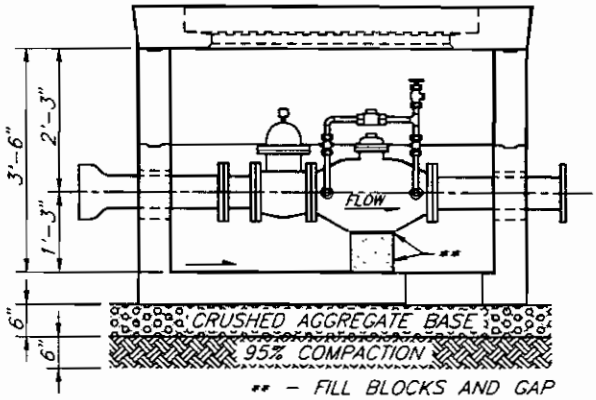

** – FILL BLOCKS AND GAP WITH CONCRETE GROUT FOR PROPER BEARING

ELEVATION

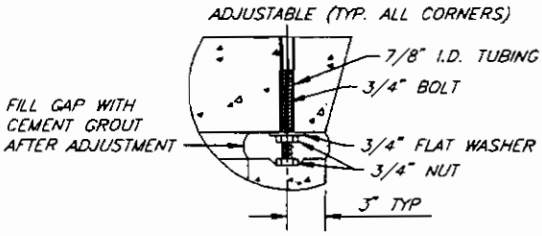

DETAIL

NOTES:

1. CRUSHED AGGREGATE BASE MATERIAL SHALL BE IN ACCORDANCE WITH THE "STANDARD SPECIFICATIONS FOR PUBLIC WORKS CONSTRUCTION" LATEST EDITION, SUBSECTION 200-2.
2. VAULT AND ACCESSORIES SHALL MEET THE DEPARTMENT'S LATEST "SPECIFICATIONS FOR PRECAST CONCRETE SUBSTRUCTURES AND ACCESSORIES".
3. THIS DRAWING IS NOT TO SCALE.

MATERIAL LIST

ITEM	QTY.	DESCRIPTION	CODE
1	1	4'-0" X 5'-0" PRECAST CONCRETE VAULT WITH 1" #3 STEEL HINGED COVER (DWP DWG. C5189)	39-01-244
2	1	6" X 27" D.I. R.G. FLG./BELL ADAPTOR AWWA	11-16-003
3	1	6" X 6" C.I. SPOOL	11-16-600
4	1	6" X 200# C.I. FLG. GATE VALVE	12-16-989
5	1	6" DETECTOR CHECK WITH BYPASS METER AND FITTINGS	44-16-600
6	1	6" X 24" C.I. SPOOL (OR OTHER OUTLET FITTING)	11-16-604
7	VAR.	1/4" FELT EXPANSION JOINT MATERIAL	65-75-603

6" FIRE SERVICE IN PRECAST CONCRETE VAULT (D.I. PIPE)

(TRAFFIC LOADING)

A9494

REVISIONS

NO	DATE	INIT		APP'D

DEPARTMENT OF WATER AND POWER
WATER SYSTEM — CITY OF LOS ANGELES

	NAME	DATE	APPROVED	
DESIGNED	L. NUNO	3-91	B. WEINSTEIN	JUNE '92
DRAWN	V TOROMANIAN	4-92		
CHECKED	C. HAMVAS	4-92		

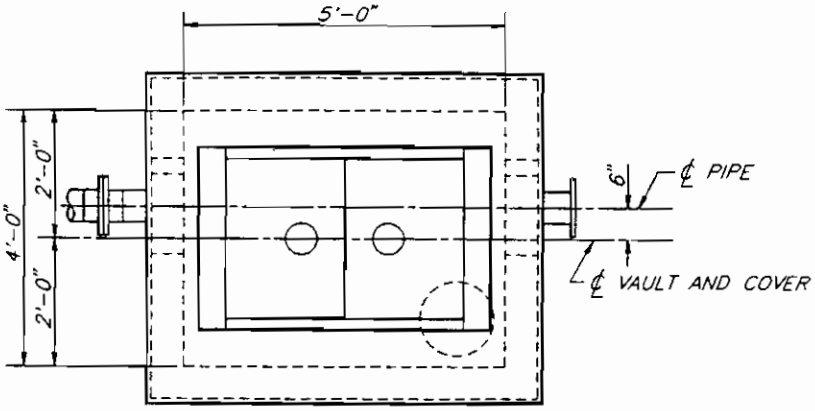

TOP VIEW

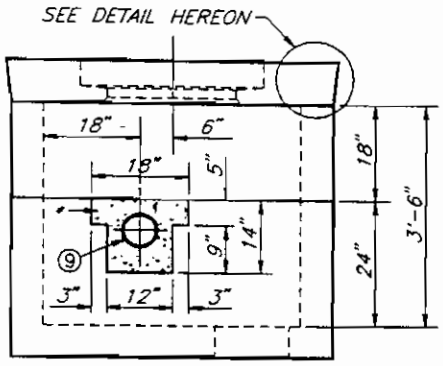

* – WRAP PIPE WITH 1/4" FELT EXPANSION JOINT MATERIAL AND FILL VOIDS WITH CEMENT GROUT

INLET VIEW

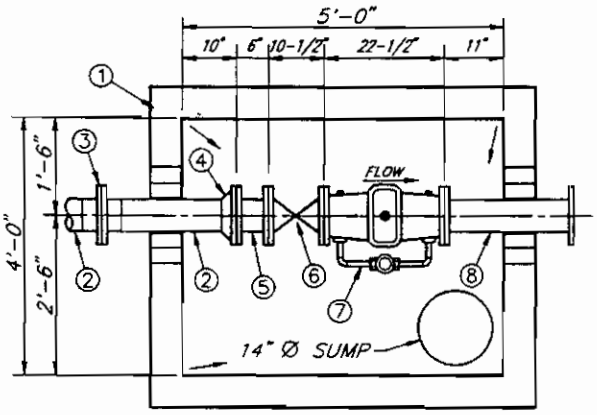

PLAN

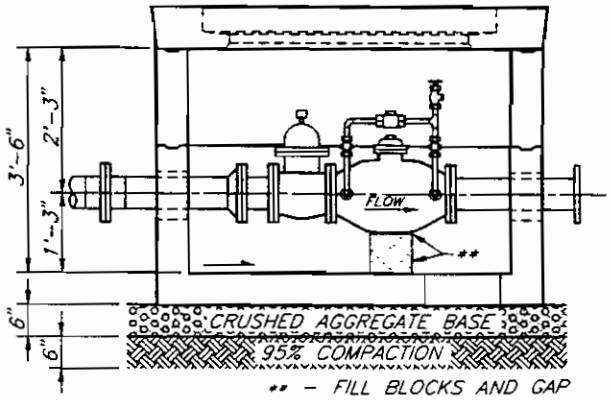

** – FILL BLOCKS AND GAP WITH CONCRETE GROUT FOR PROPER BEARING

ELEVATION

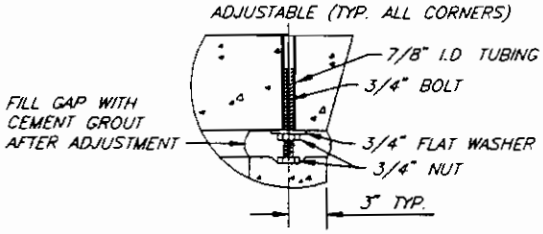

DETAIL

NOTES:

1. CRUSHED AGGREGATE BASE MATERIAL SHALL BE IN ACCORDANCE WITH THE "STANDARD SPECIFICATIONS FOR PUBLIC WORKS CONSTRUCTION" LATEST EDITION, SUBSECTION 200-2.
2. VAULT AND ACCESSORIES SHALL MEET THE DEPARTMENT'S LATEST "SPECIFICATIONS FOR PRECAST CONCRETE SUBSTRUCTURES AND ACCESSORIES".
3. THIS DRAWING IS NOT TO SCALE.

MATERIAL LIST

ITEM	QTY.	DESCRIPTION	CODE
1	1	4'-0" X 5'-0" PRECAST CONCRETE VAULT WITH 1" #3 STEEL HINGED COVER (DWP DWG. C5189)	39-01-244
2	VAR.	6-5/8" O.D. X 1/4" EN. UC., C.L. & C, S.J., WELDED STEEL PIPE	13-16-477
3	1	6" PRE-ASSEMBLED INS. FLANGE TYPE II-D	13-66-298
4	1	6" X 150# STEEL WELD NECK FLANGE	13-16-307
5	1	6" X 6" C.I SPOOL	11-16-600
6	1	6" X 200# C.I. FLG. GATE VALVE	12-16-989
7	1	6" DETECTOR CHECK WITH BYPASS METER AND FITTINGS	44-16-600
8	1	6" X 24" C.I SPOOL (OR OTHER OUTLET FITTING)	11-16-604
9	VAR.	1/4" FELT EXPANSION JOINT MATERIAL	65-75-603

6" FIRE SERVICE IN PRECAST CONCRETE VAULT (STL. PIPE)

(TRAFFIC LOADING)

A9495

REVISIONS

NO	DATE	INIT		APP'D

DEPARTMENT OF WATER AND POWER
WATER SYSTEM — CITY OF LOS ANGELES

	NAME	DATE	APPROVED
DESIGNED	L. NUNO	3-91	B. WEINSTEIN JUNE '92
DRAWN	V. TOROMANIAN	4-92	
CHECKED	C. HAMVAS	4-92	

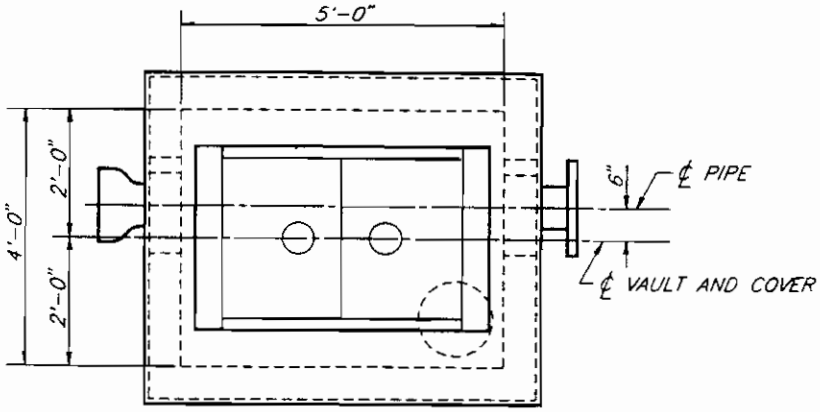

TOP VIEW

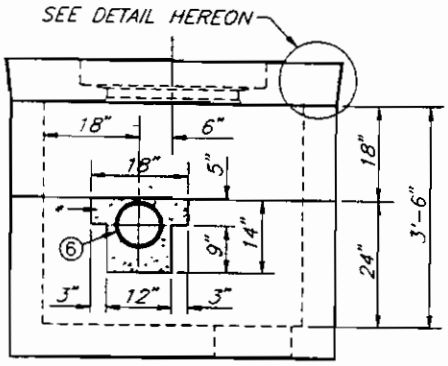

* – WRAP PIPE WITH 1/4" FELT EXPANSION JOINT MATERIAL AND FILL VOIDS WITH CEMENT GROUT

INLET VIEW

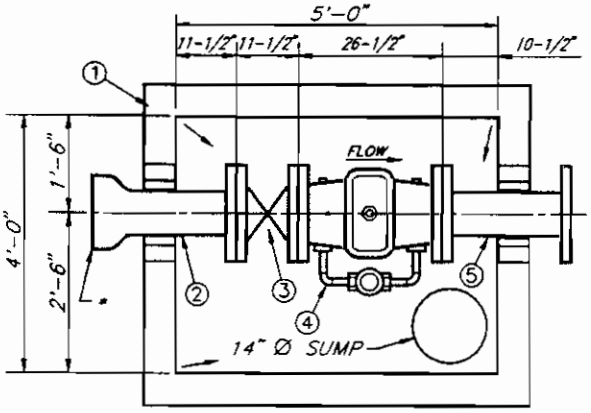

* – USE LOCKING GASKET

PLAN

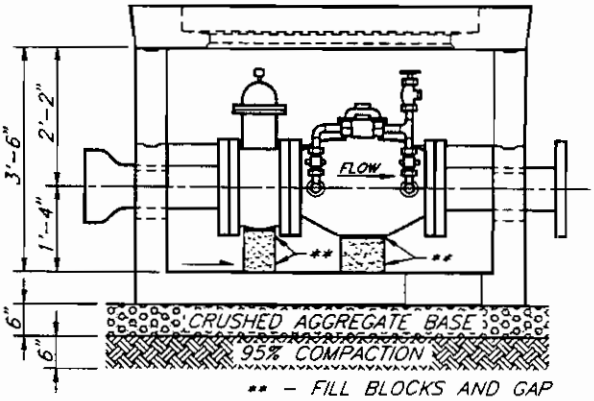

** – FILL BLOCKS AND GAP WITH CONCRETE GROUT FOR PROPER BEARING

ELEVATION

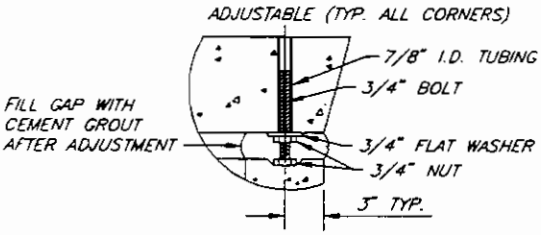

DETAIL

NOTES:

1. CRUSHED AGGREGATE BASE MATERIAL SHALL BE IN ACCORDANCE WITH THE "STANDARD SPECIFICATIONS FOR PUBLIC WORKS CONSTRUCTION" LATEST EDITION, SUBSECTION 200-2.
2. VAULT AND ACCESSORIES SHALL MEET THE DEPARTMENT'S LATEST "SPECIFICATIONS FOR PRECAST CONCRETE SUBSTRUCTURES AND ACCESSORIES"
3. THIS DRAWING IS NOT TO SCALE.

MATERIAL LIST

ITEM	QTY.	DESCRIPTION	CODE
1	1	4'-0" X 5'-0" PRECAST CONCRETE VAULT WITH 1" #3 STEEL HINGED COVER (DWP DWG. C5189)	39-01-244
2	1	8" X 27" D.I. R.G. FLG/BELL ADAPTOR AWWA	11-17-003
3	1	8" X 200# C.I FLG. GATE VALVE	12-17-989
4	1	8" DETECTOR CHECK WITH BYPASS METER AND FITTINGS	44-17-600
5	1	8" X 24" C.I. SPOOL (OR OTHER OUTLET FITTING)	11-17-604
6	VAR.	1/4" FELT EXPANSION JOINT MATERIAL	65-75-603

8" FIRE SERVICE IN PRECAST CONCRETE VAULT (D.I. PIPE)

(TRAFFIC LOADING)

A9496

REVISIONS				
NO	DATE	INIT.		APP'D

DEPARTMENT OF WATER AND POWER
WATER SYSTEM — CITY OF LOS ANGELES

	NAME	DATE	APPROVED	
DESIGNED	L. NUNO	3-91	B. WEINSTEIN	JUNE '92
DRAWN	V. TOROMANIAN	4-92		
CHECKED	C. HAMVAS	4-92		

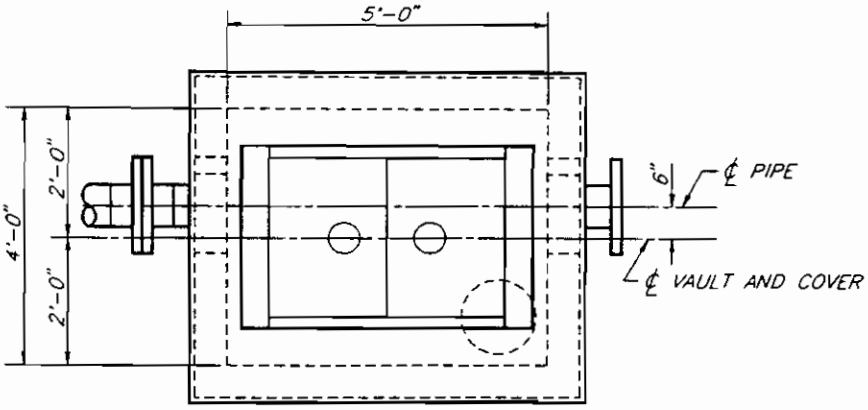

TOP VIEW

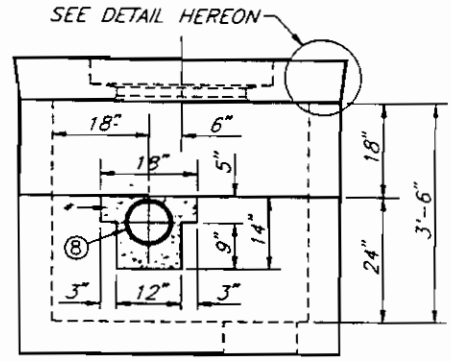

* – WRAP PIPE WITH 1/4" FELT EXPANSION JOINT MATERIAL AND FILL VOIDS WITH CEMENT GROUT

INLET VIEW

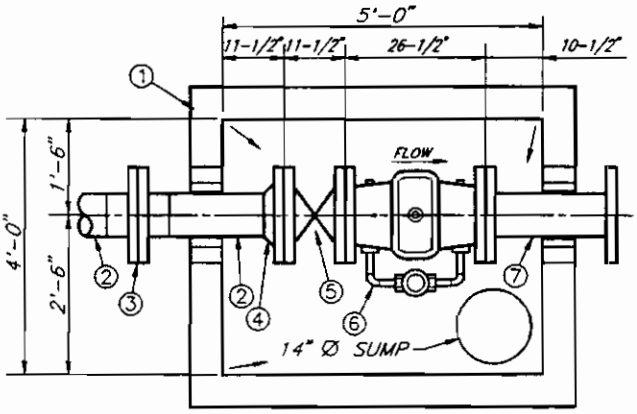

PLAN

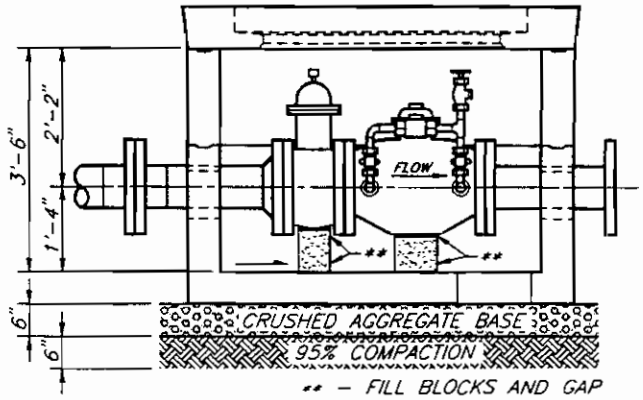

** – FILL BLOCKS AND GAP WITH CONCRETE GROUT FOR PROPER BEARING

ELEVATION

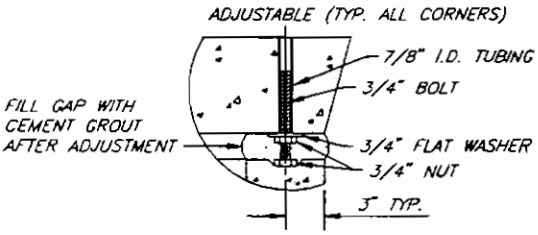

DETAIL

NOTES:

1. CRUSHED AGGREGATE BASE MATERIAL SHALL BE IN ACCORDANCE WITH THE "STANDARD SPECIFICATIONS FOR PUBLIC WORKS CONSTRUCTION" LATEST EDITION, SUBSECTION 200-2.
2. VAULT AND ACCESSORIES SHALL MEET THE DEPARTMENT'S LATEST "SPECIFICATIONS FOR PRECAST CONCRETE SUBSTRUCTURES AND ACCESSORIES".
3. THIS DRAWING IS NOT TO SCALE.

MATERIAL LIST

ITEM	QTY.	DESCRIPTION	CODE
1	1	4'-0" X 5'-0" PRECAST CONCRETE VAULT WITH 1" #3 STEEL HINGED COVER (DWP DWG. C5189)	39-01-244
2	VAR.	8-5/8" O.D. X 1/4" EN. UC., C.L. & C., S.J., WELDED STEEL PIPE	13-17-477
3	1	8" PRE-ASSEMBLED INS. FLANGE TYPE II-D	13-67-298
4	1	8" X 150# STEEL WELD NECK FLANGE	13-17-307
5	1	8" X 200# C.I. FLG. GATE VALVE	12-17-989
6	1	8" DETECTOR CHECK WITH BYPASS METER AND FITTINGS	44-17-600
7	1	8" X 24" C.I SPOOL (OR OTHER OUTLET FITTING)	11-17-604
8	VAR.	1/4" FELT EXPANSION JOINT MATERIAL	65-75-603

8" FIRE SERVICE IN PRECAST CONCRETE VAULT (STL. PIPE)

(TRAFFIC LOADING)

A9497

REVISIONS

NO	DATE	INIT.		APP'D

DEPARTMENT OF WATER AND POWER
WATER SYSTEM — CITY OF LOS ANGELES

	NAME	DATE	APPROVED	
DESIGNED	L. NUNO	3-91	B. WEINSTEIN	JUNE '92
DRAWN	V. TOROMANIAN	4-92		
CHECKED	C. HAMVAS	4-92		

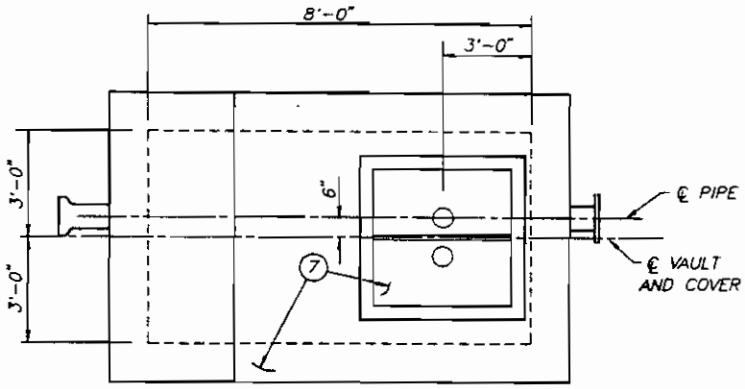

TOP VIEW

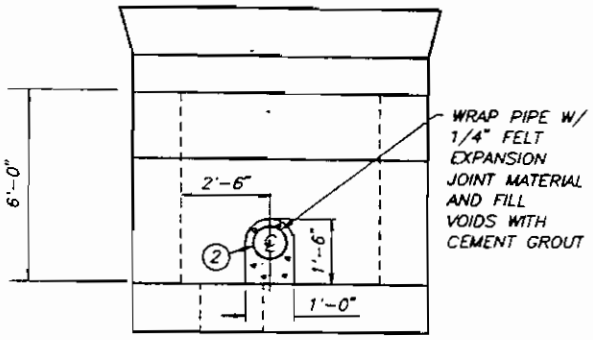

INLET VIEW

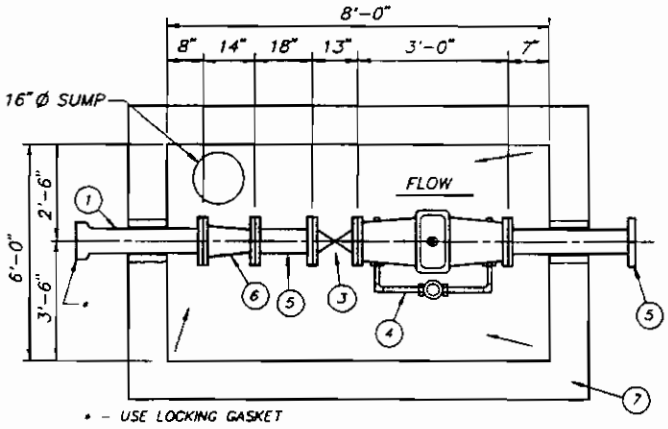

PLAN

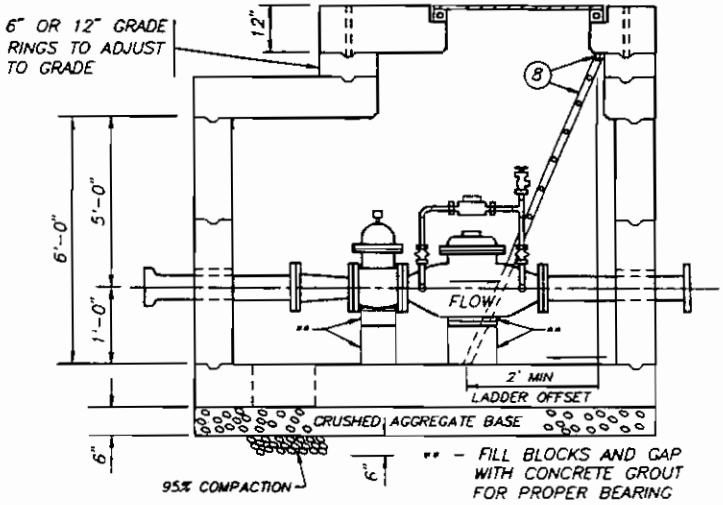

ELEVATION

NOTES:

1. CRUSHED AGGREGATE BASE MATERIAL SHALL BE IN ACCORDANCE WITH THE "STANDARD SPECIFICATIONS FOR PUBLIC WORKS CONSTRUCTION" LATEST EDITION, SUBSECTION 200-2.
2. VAULT AND ACCESSORIES SHALL MEET THE DEPARTMENT'S LATEST "SPECIFICATIONS FOR PRECAST CONCRETE SUBSTRUCTURES AND ACCESSORIES".
3. THIS DRAWING IS NOT TO SCALE.

MATERIAL LIST

ITEM	QTY	DESCRIPTION	CODE
1	1	12" X 27" D.I. R.G. FLANGE/BELL ADAPTOR AWWA	11-19-003
2	--	1/4" FELT EXPANSION JOINT MATERIAL	65-75-603
3	1	10" X 200# C.I. FLG. GATE VALVE	12-18-989
4	1	10" DETECTOR CHECK W/ BYPASS METER & FITTINGS	44-18-600
5	2	10" X 18" C.I. SPOOL (OR OTHER OUTLET FITTING)	11-18-603
6	1	12" X 10" C.I TAPER REDUCER	11-19-565
7	1	6'-0" X 8'-0" PRECAST CONCRETE VAULT WITH 1-IN.#4 STEEL HINGED COVER (DWP DWG. C5199)	39-01-468 OR 39-01-469
8	1	STEEL LADDER AND HANGING HARDWARE	39-01-301 AND 39-01-304

10" FIRE SERVICE IN PRECAST CONCRETE VAULT (D.I. PIPE)

(TRAFFIC LOADING)

A9498

REVISIONS

NO	DATE	INIT		APP'D

DEPARTMENT OF WATER AND POWER
WATER SYSTEM — CITY OF LOS ANGELES

	NAME	DATE	APPROVED
DESIGNED	L. NUNO	4-91	B. WEINSTEIN JUNE '92
DRAWN	B. DONG & V T	3-92	
CHECKED	L. NUNO	3-92	

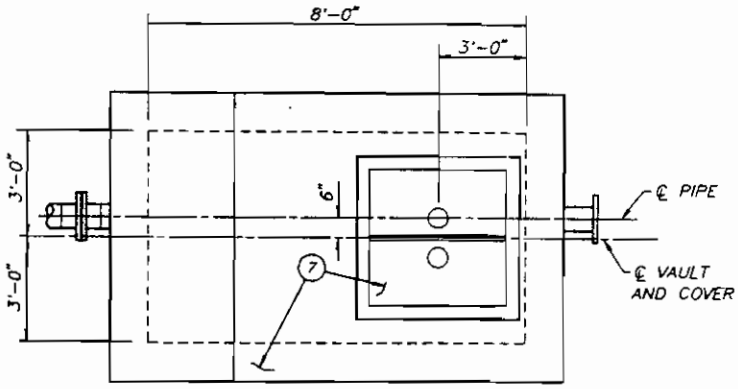

TOP VIEW

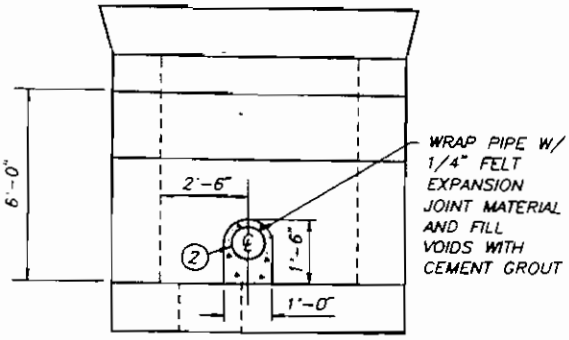

INLET VIEW

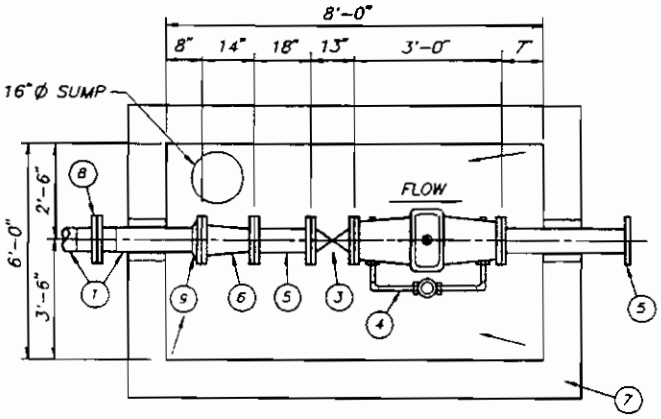

PLAN

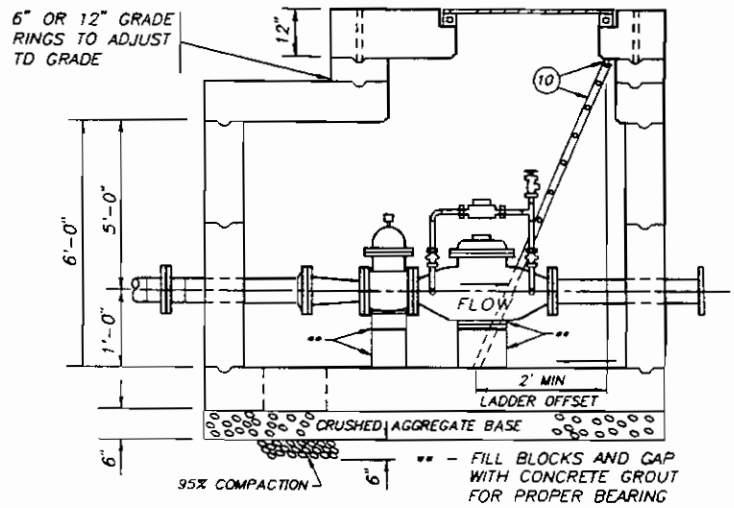

ELEVATION

NOTES:

1. CRUSHED AGGREGATE BASE MATERIAL SHALL BE IN ACCORDANCE WITH THE "STANDARD SPECIFICATIONS FOR PUBLIC WORKS CONSTRUCTION" LATEST EDITION, SUBSECTION 200-2.
2. VAULT AND ACCESSORIES SHALL MEET THE DEPARTMENT'S LATEST "SPECIFICATIONS FOR PRECAST CONCRETE SUBSTRUCTURES AND ACCESSORIES".
3. THIS DRAWING IS NOT TO SCALE.

MATERIAL LIST

ITEM	QTY	DESCRIPTION	CODE
1	—	12-3/4" O.D X 1/4" EN UC., C.L. & C., S.J., WELDED STEEL PIPE	13-19-477
2	—	1/4" FELT EXPANSION JOINT MATERIAL	65-75-603
3	1	10" X 200# C.I. FLG. GATE VALVE	12-18-989
4	1	10" DETECTOR CHECK W/ BYPASS METER & FITTINGS	44-18-600
5	2	10" X 18" C.I. SPOOL (OR OTHER OUTLET FITTINGS)	11-18-603
6	1	12" X 10" C.I. TAPER REDUCER	11-19-565
7	1	6'-0" X 8'-0" PRECAST CONCRETE VAULT WITH 1" #4 STEEL HINGED COVER (DWP DWG. C5199)	39-01-468 OR 39-01-469
8	1	12" PRE-ASS'D INS FLANGE TYPE II-D	13-69-298
9	1	12" X 150# STL WELD NECK FLANGE	13-19-307
10	1	STEEL LADDER AND HANGING HARDWARE	39-01-301 AND 39-01-304

10" FIRE SERVICE IN PRECAST CONCRETE VAULT (STL. PIPE)

(TRAFFIC LOADING)

A9499

REVISIONS

NO	DATE	INIT.		APP'D

DEPARTMENT OF WATER AND POWER
WATER SYSTEM — CITY OF LOS ANGELES

	NAME	DATE	APPROVED	
DESIGNED	L. NUNO	4-91	B. WEINSTEIN	JUNE '92
DRAWN	B. DONG & V.T.	3-92		
CHECKED	L. NUNO	3-92		

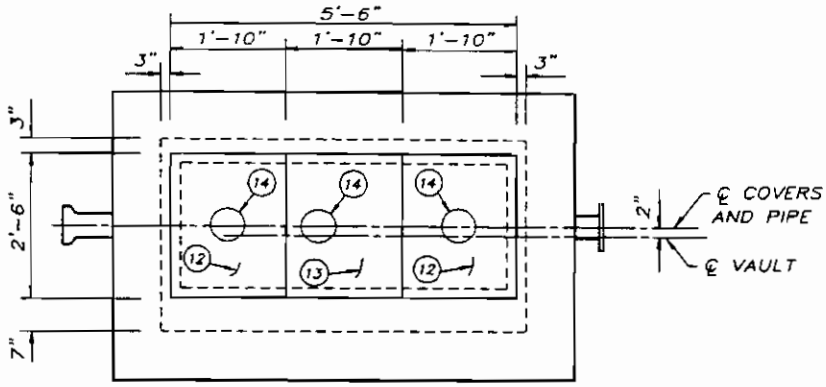

TOP VIEW

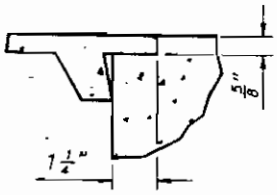

DETAIL

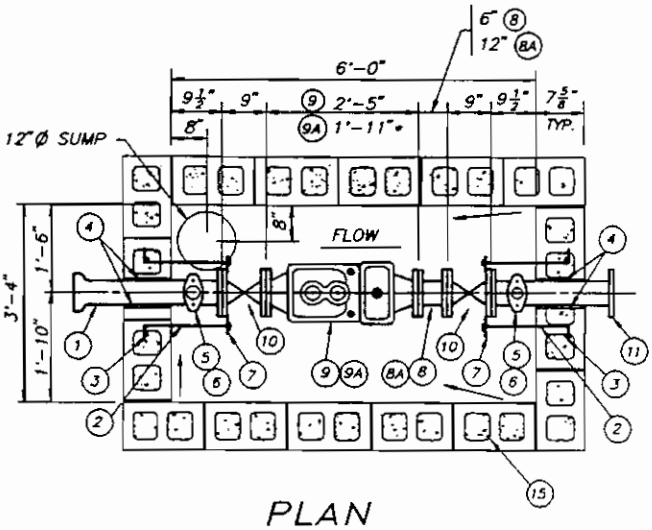

PLAN

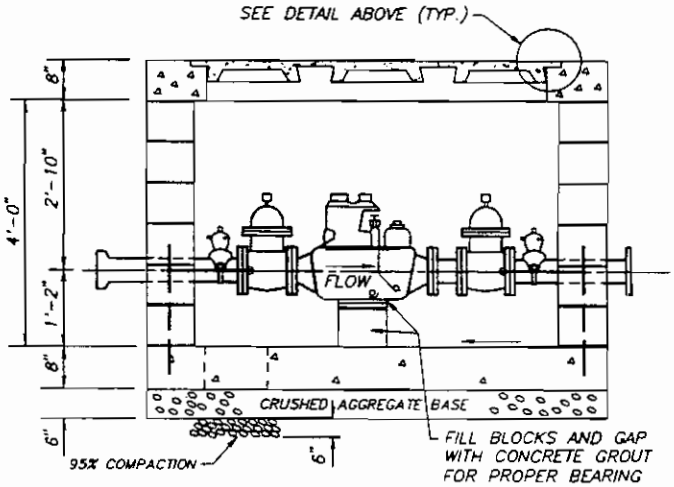

ELEVATION

NOTES:

1. CRUSHED AGGREGATE BASE MATERIAL SHALL BE IN ACCORDANCE WITH THE "STANDARD SPECIFICATIONS FOR PUBLIC WORKS CONSTRUCTION" LATEST EDITION, SUBSECTION 200-2.
2. CONCRETE, CEMENT, REINFORCEMENT, MORTAR, GROUT, AND MASONRY SHALL BE IN ACCORDANCE WITH DWP DRAWINGS B1985-S-1 AND D4353-S-1A.
3. COVERS SHALL NOT ROCK WHEN PLACED ON THE METER COVER OPENING.
4. TOP SLAB SHALL HAVE A NON-SKID SURFACE (BROOM FINISH).
5. * 4" TURBINE METER REQUIRES 4" STRAINER (INCLUDED IN 1'-11" DIMENSION).
6. THIS DRAWING IS NOT TO SCALE.

MATERIAL LIST

ITEM	QTY	DESCRIPTION	CODE
1	1	4" X 27" D.I. R.G. FLG/BELL ADAPTOR AWWA	11-13-003
2	4	7/8" DIA. VAULT ANCHOR ROD W/ NUT	58-43-930
3	4	#7 X 36" STL. REBAR	18-08-506
4	–	1/4" FELT EXPANSION JOINT MATERIAL	65-75-603
5	2	4" X 1-1/2" BRZ CLAMP	42-13-078
6	2	1-1/2" CORP. BALL VALVE	42-28-464
7	4	4" STL. GATE FLG. BAR	13-13-021
8/8A	1	4" X 6" C.I SPOOL / 4" X 12" C.I. SPOOL	11-13-600/11-13-602
9/9A	1	4" COMP. METER / 4" TURBINE METER *	44-84-221/44-84-532
10	2	4" X 200# C.I. FLG. GATE VALVE	12-13-989
11	1	4" X 24" C.I. SPOOL (OR OTHER OUTLET FITTING)	11-13-604
12	2	#3 REINFORCED CONC POLYMER COVER CENTER HOLE (B5096)	39-01-357
13	1	#3 REINFORCED CONC. POLYMER COVER OFFSIDE HOLE (B5096)	39-01-359
14	3	C.I. CENTERPIECE	39-01-190
15	96±	8" X 8" X 16" HEAVY STD. CONC. BLOCK	75-04-266

4" DOMESTIC SERVICE IN BLOCK-TYPE VAULT (D.I. PIPE)

(SIDEWALK LOADING ONLY)

REVISIONS

NO	DATE	INIT		APP'D

DEPARTMENT OF WATER AND POWER
WATER SYSTEM — CITY OF LOS ANGELES

	NAME	DATE	APPROVED
DESIGNED	L. NUNO	3-91	B. WEINSTEIN JUNE '92
DRAWN	B. DONG & V T	3-92	
CHECKED	L. NUNO	3-92	

A9500

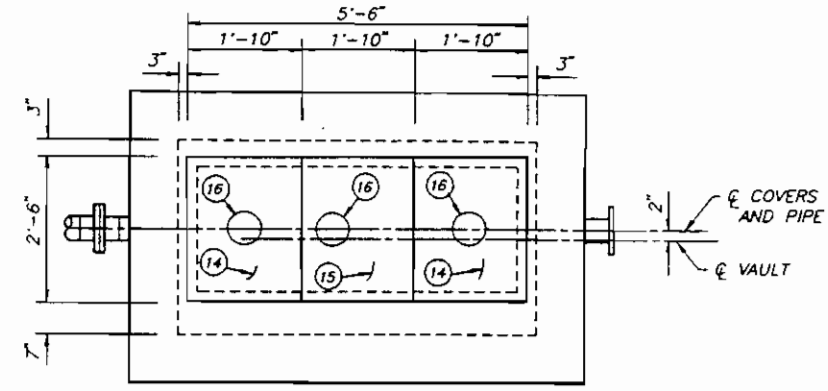

TOP VIEW

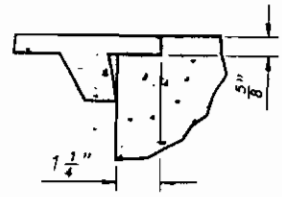

DETAIL

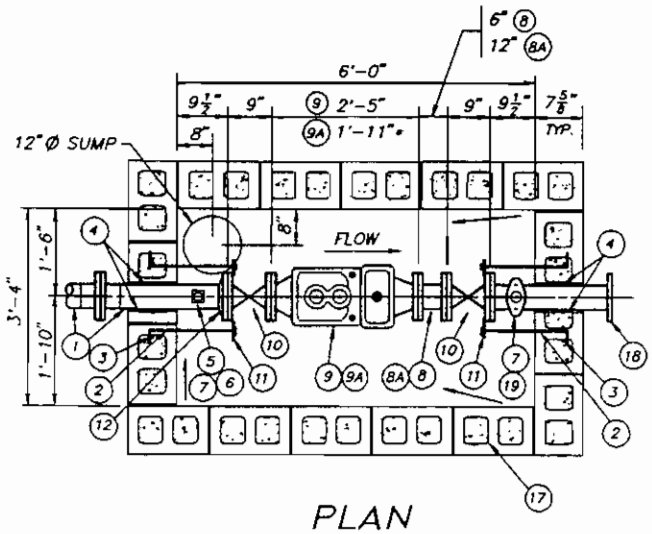

PLAN

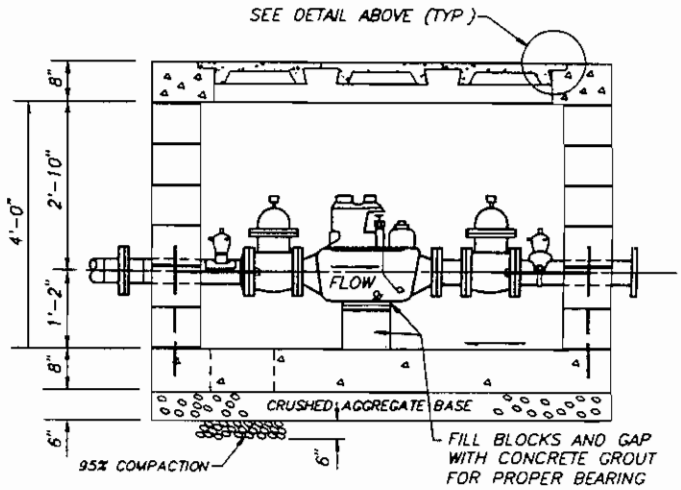

ELEVATION

NOTES:

1. CRUSHED AGGREGATE BASE MATERIAL SHALL BE IN ACCORDANCE WITH THE "STANDARD SPECIFICATIONS FOR PUBLIC WORKS CONSTRUCTION" LATEST EDITION, SUBSECTION 200-2.
2. CONCRETE, CEMENT, REINFORCEMENT, MORTAR, GROUT, AND MASONRY SHALL BE IN ACCORDANCE WITH DWP DRAWINGS B1985-S-1 AND 04353-S-1A
3. COVERS SHALL NOT ROCK WHEN PLACED ON THE METER COVER OPENING.
4. TOP SLAB SHALL HAVE A NON-SKID SURFACE (BROOM FINISH).
5. * 4" TURBINE METER REQUIRES 4" STRAINER (INCLUDED IN 1'-11" DIMENSION).
6. THIS DRAWING IS NOT TO SCALE

MATERIAL LIST

ITEM	QTY	DESCRIPTION	CODE
1	–	4-1/2" O.D. X 1/4" EN. UC., C.L. & C., S.J., WELD. STL. PIPE	13-13-477
2	4	7/8" DIA. VAULT ANCHOR ROD W/ NUT	58-43-930
3	4	#7 X 36" STL. REBAR	18-08-506
4	–	1/4" FELT EXPANSION JOINT MATERIAL	65-75-603
5	1	4" X 4" X 1/4" STL WELD PAD	--------
6	1	1-1/2" STL. CORP. THREAD WELD COUPLING	13-08-171
7	2	1-1/2" CORP BALL VALVE	42-28-464
8/8A	1	4" X 6" C.I. SPOOL / 4" X 12" C.I. SPOOL	11-13-600/11-13-602
9/9A	1	4" COMP. METER / 4" TURBINE METER *	44-84-221/44-84-532
10	2	4" X 200# C.I. FLG. GATE VALVE	12-13-989
11	4	4" STL. GATE FLG. BAR	13-13-021
12	1	4" X 150# STL. WELD NECK FLANGE	13-13-307
13	1	4" PRE-ASSEMBLED INS. FLANGE TYPE II-D	13-63-298
14	2	#3 REINFORCED CONC POLYMER COVER CENTER HOLE (B5096)	39-01-357
15	1	#3 REINFORCED CONC POLYMER COVER OFFSIDE HOLE (B5096)	39-01-359
16	3	C.I. CENTERPIECE	39-01-190
17	96 ±	8" X 8" X 16" HEAVY STD CONC. BLOCK	75-04-266
18	1	4" X 24" C.I. SPOOL (OR OTHER OUTLET FITTING)	11-13-604
19	1	4" X 1-1/2" BRZ. CLAMP	42-13-078

4" DOMESTIC SERVICE IN BLOCK-TYPE VAULT (STL. PIPE)

(SIDEWALK LOADING ONLY)

A9501

REVISIONS

NO	DATE	INIT.		APP'D

DEPARTMENT OF WATER AND POWER
WATER SYSTEM — CITY OF LOS ANGELES

	NAME	DATE	APPROVED	
DESIGNED	L. NUNO	3-90	B. WEINSTEIN	JUNE '92
DRAWN	B. DONG & V.T	3-92		
CHECKED	L. NUNO	3-92		

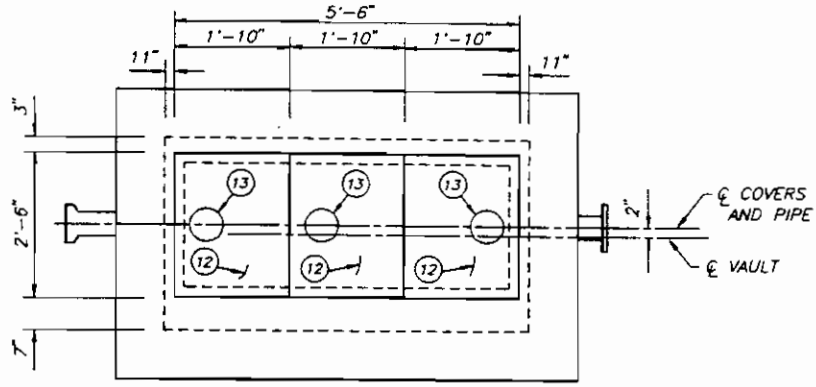

TOP VIEW

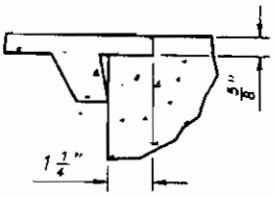

DETAIL

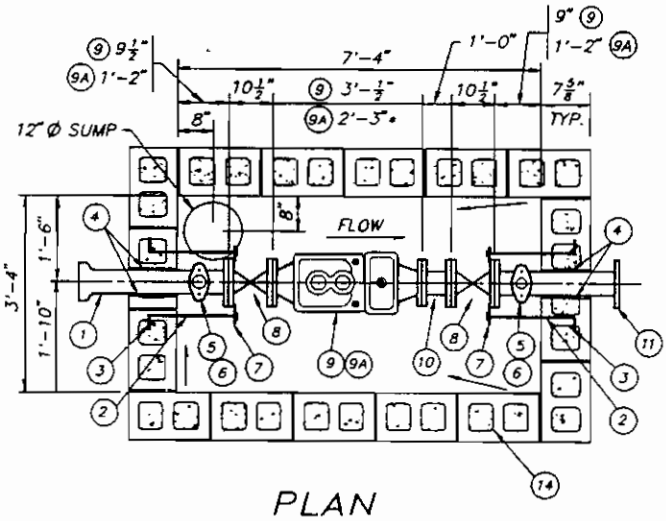

PLAN

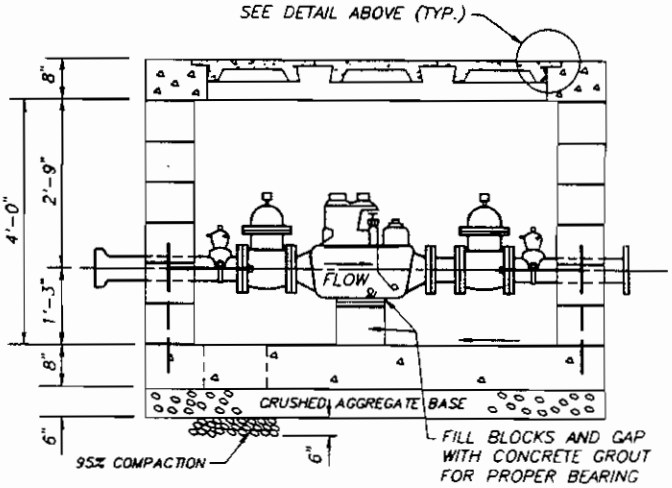

ELEVATION

NOTES:

1. CRUSHED AGGREGATE BASE MATERIAL SHALL BE IN ACCORDANCE WITH THE "STANDARD SPECIFICATIONS FOR PUBLIC WORKS CONSTRUCTION" LATEST EDITION, SUBSECTION 200-2.
2. CONCRETE, CEMENT, REINFORCEMENT, MORTAR, GROUT, AND MASONRY SHALL BE IN ACCORDANCE WITH DWP DRAWINGS B1985-S-1 AND D4353-S-1A.
3. COVERS SHALL NOT ROCK WHEN PLACED ON THE METER COVER OPENING.
4. TOP SLAB SHALL HAVE A NON-SKID SURFACE (BROOM FINISH).
5. * 6" TURBINE METER REQUIRES 6" STRAINER (INCLUDED IN 2'-3" DIMENSION).
6. THIS DRAWING IS NOT TO SCALE

MATERIAL LIST

ITEM	QTY	DESCRIPTION	CODE
1	1	6" X 27" D.I. R.G. FLG./BELL ADAPTOR AWWA	11-16-003
2	4	7/8" DIA. VAULT ANCHOR ROD W/ NUT	58-43-930
3	4	#7 X 36" STL REBAR	18-08-506
4	–	1/4" FELT EXPANSION JOINT MATERIAL	65-75-603
5	2	6" X 1-1/2" BRZ. CLAMP	42-16-078
6	2	1-1/2" CORP. BALL VALVE	42-28-464
7	4	6" STL. GATE FLG BAR	13-16-021
8	2	6" X 200# C.I. FLG GATE VALVE	12-16-989
9/9A	1	6" COMP METER / 6" TURBINE METER *	44-84-521/44-84-533
10	1	6" X 12" C.I SPOOL	11-16-602
11	1	6" X 24" C.I SPOOL (OR OTHER OUTLET FITTING)	11-16-604
12	3	#3 REINFORCED CONC. POLYMER COVER OFFSIDE HOLE (B5096)	39-01-359
13	3	C.I. CENTERPIECE	39-01-190
14	108±	8" X 8" X 16" HEAVY STD CONC. BLOCK	75-04-266

6" DOMESTIC SERVICE IN BLOCK-TYPE VAULT (D.I. PIPE)

(SIDEWALK LOADING ONLY)

A9502

REVISIONS

NO	DATE	INIT		APP'D

DEPARTMENT OF WATER AND POWER
WATER SYSTEM — CITY OF LOS ANGELES

	NAME	DATE	APPROVED	
DESIGNED	L. NUNO	3-90	B. WEINSTEIN	JUNE '92
DRAWN	B. OONG & V.T	3-92		
CHECKED	L. NUNO	3-92		

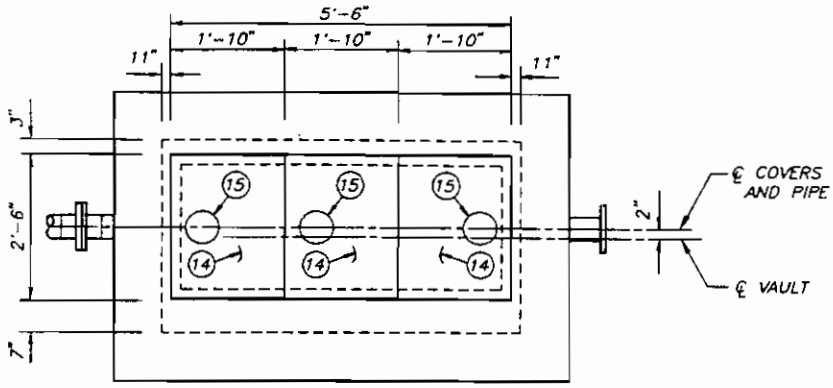

TOP VIEW

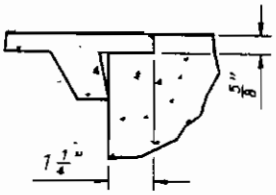

DETAIL

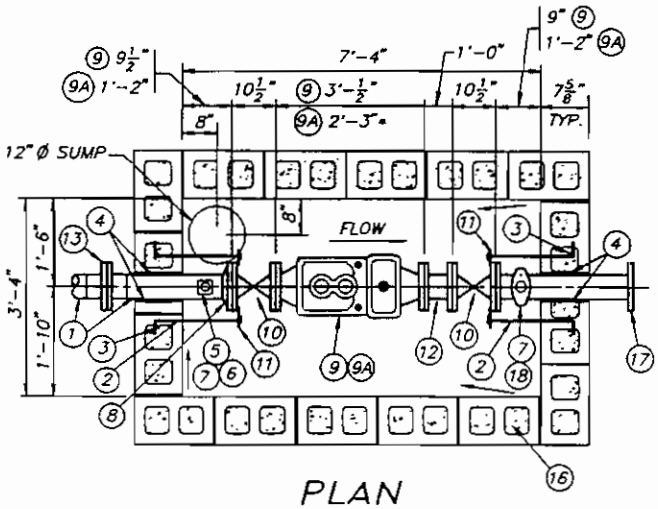

PLAN

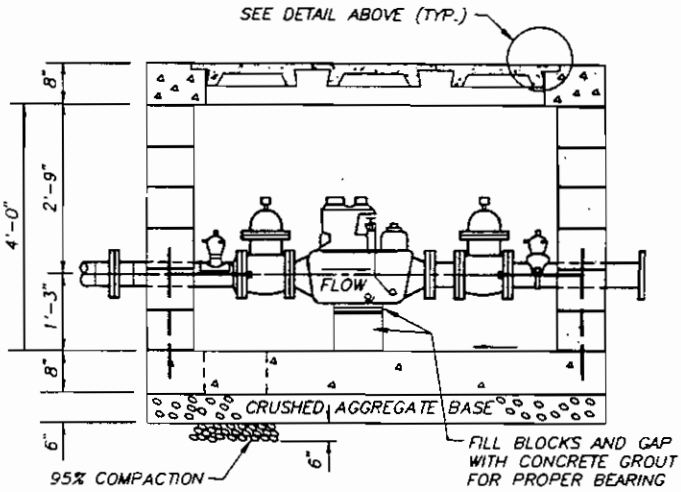

ELEVATION

NOTES:

1. CRUSHED AGGREGATE BASE MATERIAL SHALL BE IN ACCORDANCE WITH THE "STANDARD SPECIFICATIONS FOR PUBLIC WORKS CONSTRUCTION" LATEST EDITION, SUBSECTION 200-2.
2. CONCRETE, CEMENT, REINFORCEMENT, MORTAR, GROUT, AND MASONRY SHALL BE IN ACCORDANCE WITH DWP DRAWINGS B1985-S-1 AND D4353-S-1A.
3. COVERS SHALL NOT ROCK WHEN PLACED ON THE METER COVER OPENING.
4. TOP SLAB SHALL HAVE A NON-SKID SURFACE (BROOM FINISH).
5. * 6" TURBINE METER REQUIRES 6" STRAINER (INCLUDED IN 2'-3" DIMENSION).
6. THIS DRAWING IS NOT TO SCALE.

MATERIAL LIST

ITEM	QTY	DESCRIPTION	CODE
1	–	6-5/8" O.D X 1/4" EN. UC., C.L. & C., S.J., WELD. STL. PIPE	13-16-477
2	4	7/8" DIA. VAULT ANCHOR ROD W/ NUT	58-43-930
3	4	#7 X 36" STL. REBAR	18-08-506
4	–	1/4" FELT EXPANSION JOINT MATERIAL	65-75-603
5	1	4" X 4"X 1/4" STL. WELD PAD	-------
6	1	1-1/2" STL. CORP THREAD WELD COUPLING	13-08-171
7	2	1-1/2" CORP. BALL VALVE	42-28-464
8	1	6" X 150# STL. WELD NECK FLANGE	13-16-307
9/9A	1	6" COMP. METER / 6" TURBINE METER *	44-84-521/44-84-533
10	2	6" X 200# C.I. FLG GATE VALVE	12-16-989
11	4	6" STL. GATE FLG. BAR	13-16-021
12	1	6" X 12" C.I. SPOOL	11-16-602
13	1	6" PRE-ASS'D INS. FLANGE TYPE II-D	13-66-298
14	3	#3 REINFORCED CONC. POLYMER COVER OFFSIDE HOLE (B5096)	39-01-359
15	3	C.I. CENTERPIECE	39-01-190
16	108±	8" X 8" X 16" HEAVY STD. CONC BLOCK	75-04-266
17	1	6" X 24" C.I. SPOOL (OR OTHER OUTLET FITTING)	11-16-604
18	1	6" X 1-1/2" BRZ. CLAMP	42-16-078

6" DOMESTIC SERVICE IN BLOCK-TYPE VAULT (STL. PIPE)
(SIDEWALK LOADING ONLY)

A9503

REVISIONS

NO.	DATE	INIT.		APP'D

DEPARTMENT OF WATER AND POWER
WATER SYSTEM — CITY OF LOS ANGELES

	NAME	DATE	APPROVED
DESIGNED	L. NUNO	9-90	B. WEINSTEIN JUNE '92
DRAWN	B. DONG & V.T.	3-92	
CHECKED	L. NUNO	3-92	

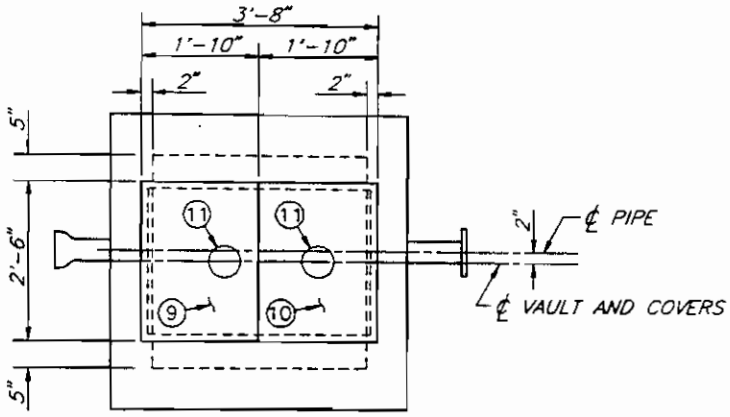

TOP VIEW

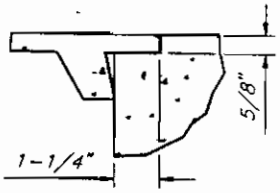

DETAIL

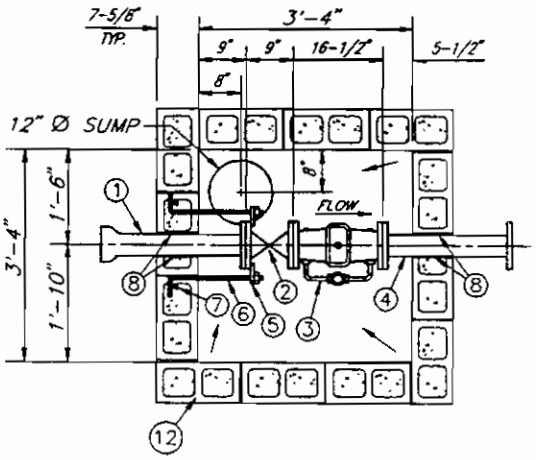

PLAN

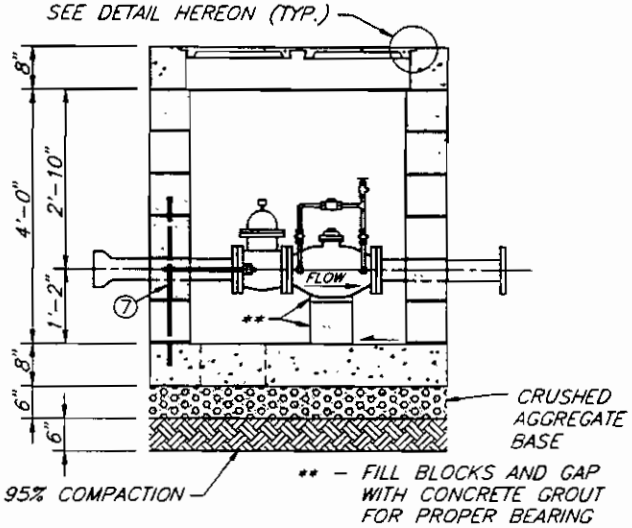

ELEVATION

NOTES:

1. CRUSHED AGGREGATE BASE MATERIAL SHALL BE IN ACCORDANCE WITH THE "STANDARD SPECIFICATIONS FOR PUBLIC WORKS CONSTRUCTION" LATEST EDITION, SUBSECTION 200-2.
2. CONCRETE, CEMENT, REINFORCEMENT, MORTAR, GROUT, AND MASONRY SHALL BE IN ACCORDANCE WITH DWP DRAWINGS B1985-S-1 AND D4353-S-1A.
3. COVERS SHALL NOT ROCK WHEN PLACED ON THE METER COVER OPENING.
4. TOP SLAB SHALL HAVE A NON-SKID SURFACE (BROOM FINISH)
5. THIS DRAWING IS NOT TO SCALE

MATERIAL LIST

ITEM	QTY.	DESCRIPTION	CODE
1	1	4" X 27" D.I. R.G. FLG/BELL ADAPTOR AWWA	11-13-003
2	1	4" X 200# C.I. FLG. GATE VALVE	12-13-989
3	1	4" DETECTOR CHECK WITH BYPASS METER AND FITTINGS	44-13-600
4	1	4" X 24" C.I. SPOOL (OR OTHER OUTLET FITTING)	11-13-604
5	2	4" STEEL GATE FLANGE BAR	13-13-021
6	2	7/8" DIA. VAULT ANCHOR ROD WITH NUT	58-43-930
7	2	#7 X 36" STEEL REBAR	18-D8-506
8	VAR.	1/4" FELT EXPANSION JOINT MATERIAL	65-75-603
9	1	#3 REINFORCED CONC. POLYMER COVER OFFSIDE HOLE (B5096)	39-01-359
10	1	#3 REINFORCED CONC. POLYMER COVER CENTER HOLE (B5096)	39-01-357
11	2	C.I. CENTERPIECE	39-01-190
12	72±	8" X 8" X 16" HEAVY STD. CONC. BLOCK	75-D4-266

4" FIRE SERVICE IN BLOCK-TYPE VAULT (D.I. PIPE)

(SIDEWALK LOADING ONLY)

A9504

REVISIONS

NO.	DATE	INIT		APP'D

DEPARTMENT OF WATER AND POWER
WATER SYSTEM — CITY OF LOS ANGELES

	NAME	DATE	APPROVED
DESIGNED	L. NUNO	3-91	B. WEINSTEIN BW JUNE '92
DRAWN	V. TOROMANIAN	5-92	
CHECKED	C. HAMVAS	5-92	

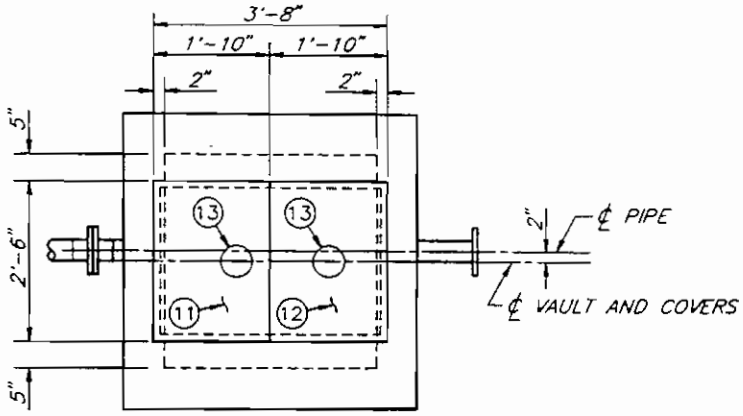

TOP VIEW

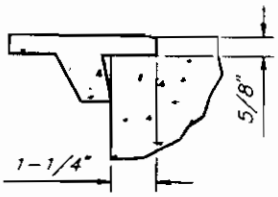

DETAIL

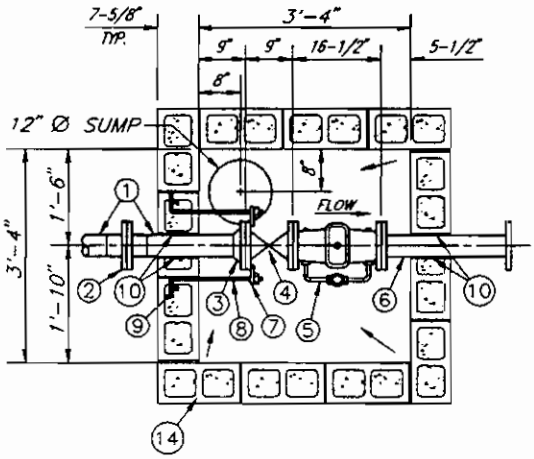

PLAN

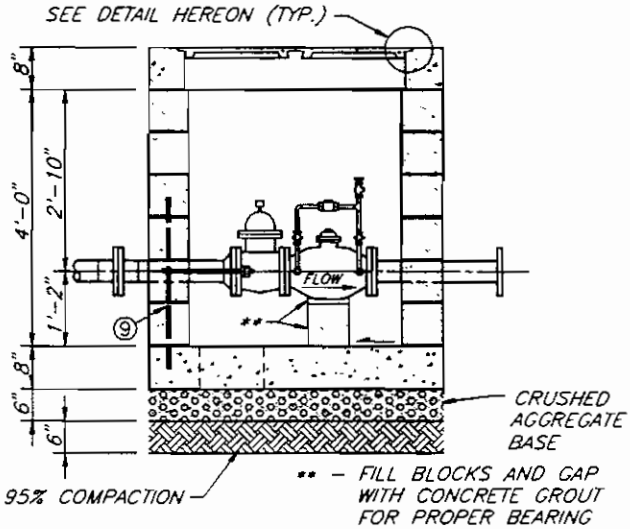

ELEVATION

NOTES:

1. CRUSHED AGGREGATE BASE MATERIAL SHALL BE IN ACCORDANCE WITH THE "STANDARD SPECIFICATIONS FOR PUBLIC WORKS CONSTRUCTION" LATEST EDITION, SUBSECTION 200-2.
2. CONCRETE, CEMENT, REINFORCEMENT, MORTAR, GROUT, AND MASONRY SHALL BE IN ACCORDANCE WITH DWP DRAWINGS B1985-S-1 AND D4353-S-1A.
3. COVERS SHALL NOT ROCK WHEN PLACED ON THE METER COVER OPENING
4. TOP SLAB SHALL HAVE A NON-SKID SURFACE (BROOM FINISH)
5. THIS DRAWING IS NOT TO SCALE.

MATERIAL LIST

ITEM	QTY.	DESCRIPTION	CODE
1	VAR	4"-1/2" O.D X 1/4" EN UC., C.L. & C, S.J., WELDED STEEL PIPE	13-13-477
2	1	4" PRE-ASSEMBLED INS. FLANGE TYPE II-D	13-63-298
3	1	4" X 150# STL. WELD NECK FLANGE	13-13-307
4	1	4" X 200# C.I. FLG. GATE VALVE	12-13-989
5	1	4" DETECTOR CHECK WITH BYPASS METER AND FITTINGS	44-13-600
6	1	4" X 24" C.I. SPOOL (OR OTHER OUTLET FITTING)	11-13-604
7	2	4" STEEL GATE FLANGE BAR	13-13-021
8	2	7/8" DIA. VAULT ANCHOR ROD WITH NUT	58-43-930
9	2	#7 X 36" STEEL REBAR	18-08-506
10	VAR	1/4" FELT EXPANSION JOINT MATERIAL	65-75-603
11	1	#3 REINFORCED CONC. POLYMER COVER OFFSIDE HOLE (B5096)	39-01-359
12	1	#3 REINFORCED CONC. POLYMER COVER CENTER HOLE (B5096)	39-01-357
13	2	C.I. CENTERPIECE	39-01-190
14	72±	8" X 8" X 16" HEAVY STD. CONC. BLOCK	75-04-266

4" FIRE SERVICE IN BLOCK-TYPE VAULT (STL. PIPE)

(SIDEWALK LOADING ONLY)

A9505

REVISIONS

NO	DATE	INIT		APP'D

DEPARTMENT OF WATER AND POWER
WATER SYSTEM — CITY OF LOS ANGELES

	NAME	DATE	APPROVED
DESIGNED	L. NUNO	3-91	B. WEINSTEIN BW JUNE '92
DRAWN	V. TOROMANIAN	5-92	
CHECKED	C HAMVAS	5-92	

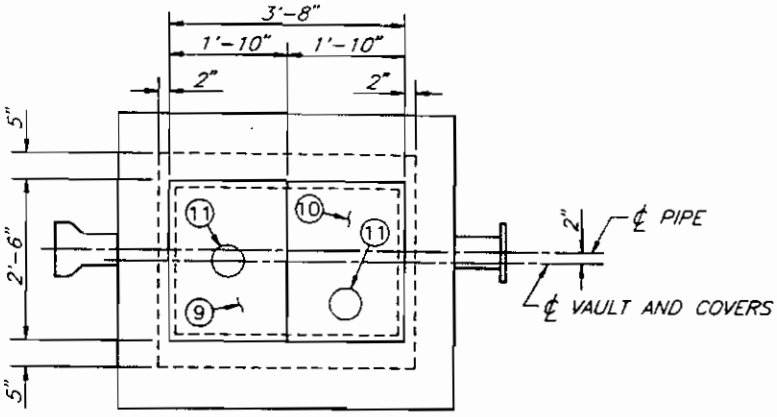

TOP VIEW

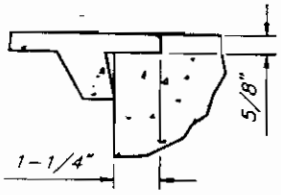

DETAIL

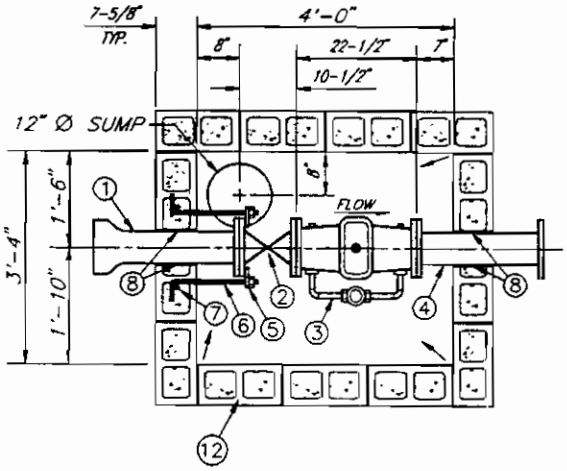

PLAN

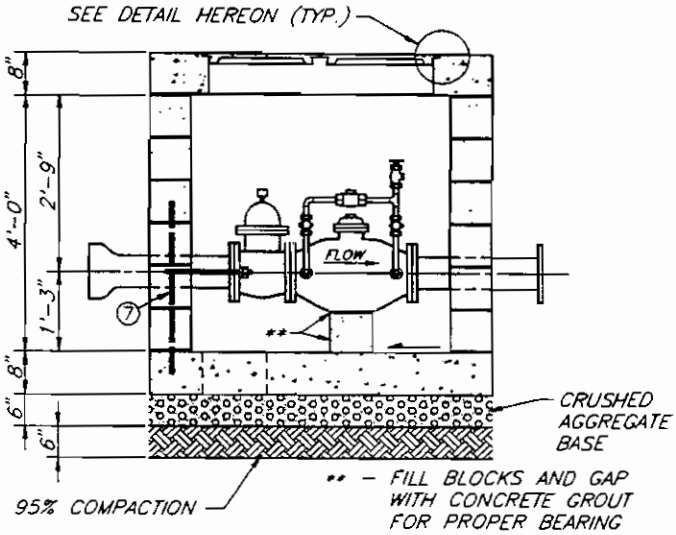

ELEVATION

NOTES:

1. CRUSHED AGGREGATE BASE MATERIAL SHALL BE IN ACCORDANCE WITH THE "STANDARD SPECIFICATIONS FOR PUBLIC WORKS CONSTRUCTION" LATEST EDITION, SUBSECTION 200-2.
2. CONCRETE, CEMENT, REINFORCEMENT, MORTAR, GROUT, AND MASONRY SHALL BE IN ACCORDANCE WITH DWP DRAWINGS B1985-S-1 AND D4353-S-1A.
3. COVERS SHALL NOT ROCK WHEN PLACED ON THE METER COVER OPENING
4. TOP SLAB SHALL HAVE A NON-SKID SURFACE (BROOM FINISH)
5. THIS DRAWING IS NOT TO SCALE

MATERIAL LIST

ITEM	QTY.	DESCRIPTION	CODE
1	1	6" X 27" D.I. R.G. FLG./BELL ADAPTOR AWWA	11-16-003
2	1	6" X 200# C.I. FLG. GATE VALVE	12-16-989
3	1	6" DETECTOR CHECK WITH BYPASS METER AND FITTINGS	44-16-600
4	1	6" X 24" C.I. SPOOL (OR OTHER OUTLET FITTING)	11-16-604
5	2	6" STEEL GATE FLANGE BAR	13-16-021
6	2	7/8" DIA. VAULT ANCHOR ROD WITH NUT	58-43-930
7	2	#7 X 36" STEEL REBAR	18-D8-506
8	VAR.	1/4" FELT EXPANSION JOINT MATERIAL	65-75-603
9	1	#3 REINFORCED CONC. POLYMER COVER CENTER HOLE (B5096)	39-01-357
10	1	#3 REINFORCED CONC. POLYMER COVER OFFEND HOLE (B5096)	39-01-358
11	2	C.I. CENTERPIECE	39-01-190
12	78±	8" X 8" X 16" HEAVY STD. CONC. BLOCK	75-D4-266

6" FIRE SERVICE IN BLOCK-TYPE VAULT (D.I. PIPE)

(SIDEWALK LOADING ONLY)

A9506

REVISIONS

NO	DATE	INIT		APP'D

DEPARTMENT OF WATER AND POWER
WATER SYSTEM — CITY OF LOS ANGELES

	NAME	DATE	APPROVED	
DESIGNED	L. NUNO	3-91	B. WEINSTEIN	JUNE '92
DRAWN	V. TOROMANIAN	5-92		
CHECKED	C. HAMVAS	5-92		

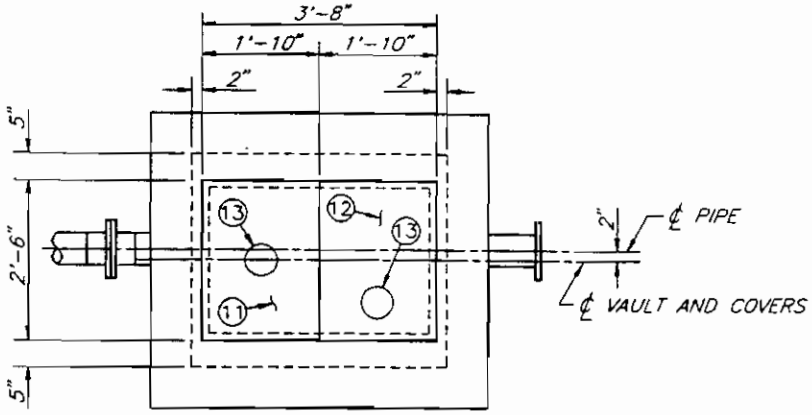

TOP VIEW

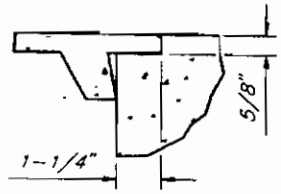

DETAIL

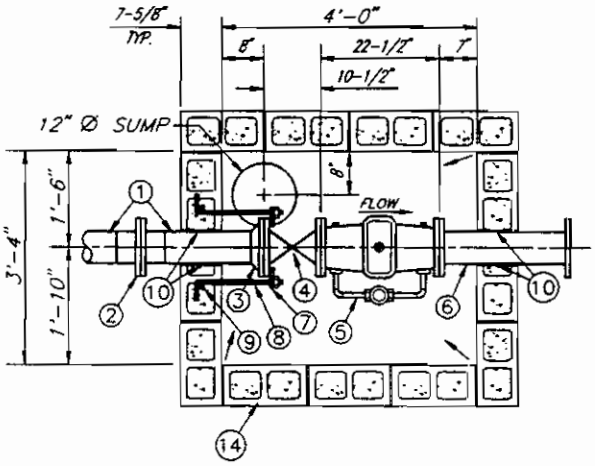

PLAN

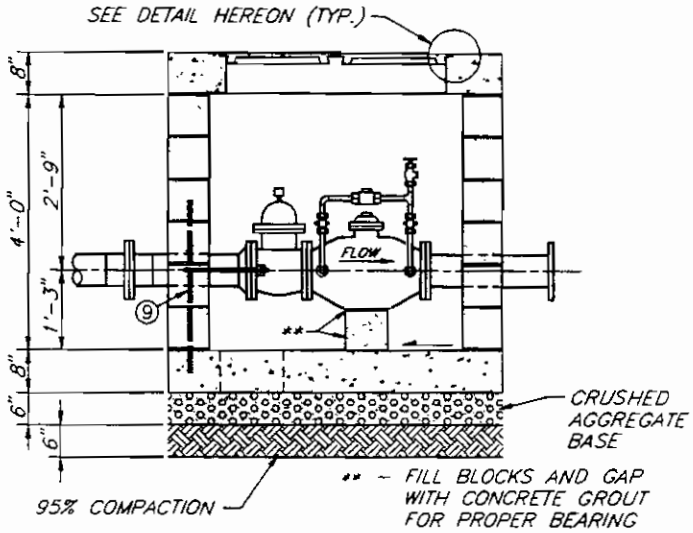

ELEVATION

NOTES:

1. CRUSHED AGGREGATE BASE MATERIAL SHALL BE IN ACCORDANCE WITH THE "STANDARD SPECIFICATIONS FOR PUBLIC WORKS CONSTRUCTION" LATEST EDITION, SUBSECTION 200-2.
2. CONCRETE, CEMENT, REINFORCEMENT, MORTAR, GROUT, AND MASONRY SHALL BE IN ACCORDANCE WITH DWP DRAWINGS B1985-S-1 AND D4353-S-1A.
3. COVERS SHALL NOT ROCK WHEN PLACED ON THE METER COVER OPENING.
4. TOP SLAB SHALL HAVE A NON-SKID SURFACE (BROOM FINISH)
5. THIS DRAWING IS NOT TO SCALE.

MATERIAL LIST

ITEM	QTY.	DESCRIPTION	CODE
1	VAR	6-5/8" O.D. X 1/4" EN. UC., C.L. & C, S.J., WELDED STEEL PIPE	13-16-477
2	1	6" PRE-ASSEMBLED INS. FLANGE TYPE II-D	13-66-298
3	1	6" X 150# STL. WELD NECK FLANGE	13-16-307
4	1	6" X 200# C.I. FLG. GATE VALVE	12-16-989
5	1	6" DETECTOR CHECK WITH BYPASS METER AND FITTINGS	44-16-600
6	1	6" X 24" C.I. SPOOL (OR OTHER OUTLET FITTING)	11-16-604
7	2	6" STEEL GATE FLANGE BAR	13-16-021
8	2	7/8" DIA. VAULT ANCHOR ROD WITH NUT	58-43-930
9	2	#7 X 36" STEEL REBAR	18-08-506
10	VAR	1/4" FELT EXPANSION JOINT MATERIAL	65-75-603
11	1	#3 REINFORCED CONC. POLYMER COVER CENTER HOLE (B5096)	39-01-357
12	1	#3 REINFORCED CONC. POLYMER COVER OFFEND HOLE (B5096)	39-01-358
13	2	C.I. CENTERPIECE	39-01-190
14	78±	8" X 8" X 16" HEAVY STD. CONC. BLOCK	75-04-266

6" FIRE SERVICE IN BLOCK-TYPE VAULT (STL. PIPE)

(SIDEWALK LOADING ONLY)

A9507

REVISIONS

NO.	DATE	INIT		APP'D

DEPARTMENT OF WATER AND POWER
WATER SYSTEM — CITY OF LOS ANGELES

	NAME	DATE	APPROVED
DESIGNED	L. NUNO	3-91	B. WEINSTEIN BW JUNE '92
DRAWN	V. TOROMANIAN	5-92	
CHECKED	C. HAMVAS	5-92	

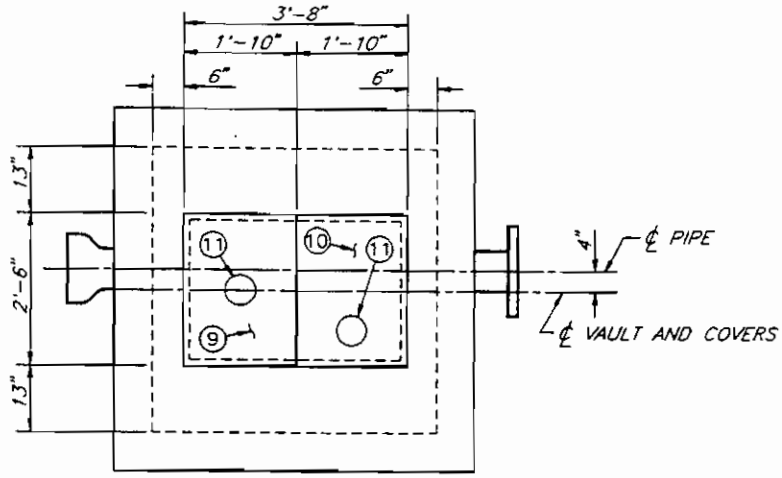

TOP VIEW

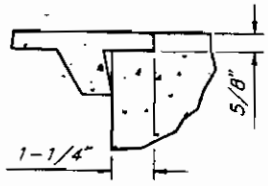

DETAIL

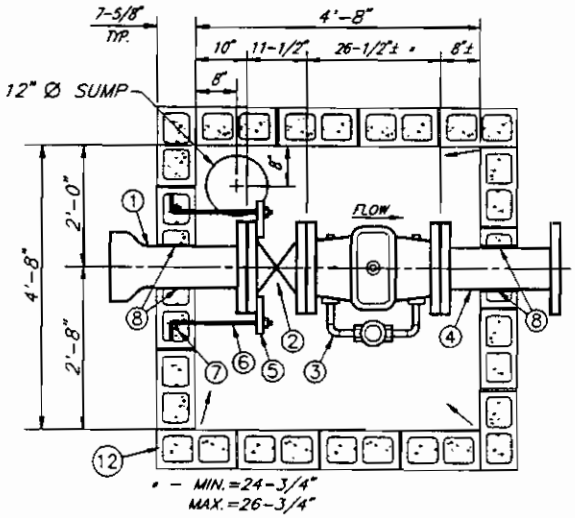

PLAN

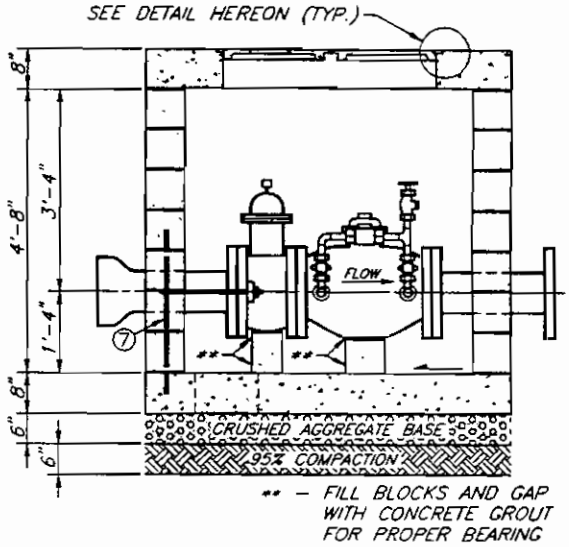

ELEVATION

NOTES:

1. CRUSHED AGGREGATE BASE MATERIAL SHALL BE IN ACCORDANCE WITH THE "STANDARD SPECIFICATIONS FOR PUBLIC WORKS CONSTRUCTION" LATEST EDITION, SUBSECTION 200-2.
2. CONCRETE, CEMENT, REINFORCEMENT, MORTAR, GROUT, AND MASONRY SHALL BE IN ACCORDANCE WITH DWP DRAWINGS B1985-S-1 AND D4353-S-1A.
3. COVERS SHALL NOT ROCK WHEN PLACED ON THE METER COVER OPENING
4. TOP SLAB SHALL HAVE A NON-SKID SURFACE (BROOM FINISH).
5. THIS DRAWING IS NOT TO SCALE.

MATERIAL LIST

ITEM	QTY.	DESCRIPTION	CODE
1	1	8" X 27" D.I. R.G. FLG./BELL ADAPTOR AWWA	11-17-003
2	1	8" X 200# C.I. FLG. GATE VALVE	12-17-989
3	1	8" DETECTOR CHECK WITH BYPASS METER AND FITTINGS	44-17-600
4	1	8" X 24" C.I. SPOOL (OR OTHER OUTLET FITTING)	11-17-604
5	2	8" STEEL GATE FLANGE BAR	13-17-021
6	2	7/8" DIA VAULT ANCHOR ROD WITH NUT	58-43-930
7	2	#7 X 36" STEEL REBAR	18-08-506
8	VAR.	1/4" FELT EXPANSION JOINT MATERIAL	65-75-603
9	1	#3 REINFORCED CONC POLYMER COVER CENTER HOLE (B5096)	39-01-357
10	1	#3 REINFORCED CONC. POLYMER COVER OFFEND HOLE (B5096)	39-01-358
11	2	C.I. CENTERPIECE	39-01-190
12	112±	8" X 8" X 16" HEAVY STD. CONC. BLOCK	75-04-266

8" FIRE SERVICE IN BLOCK-TYPE VAULT (D.I. PIPE)

(SIDEWALK LOADING ONLY)

REVISIONS

NO.	DATE	INIT		APP'D

DEPARTMENT OF WATER AND POWER
WATER SYSTEM — CITY OF LOS ANGELES

	NAME	DATE	APPROVED
DESIGNED	L. NUNO	3-91	B. WEINSTEIN JUNE '92
DRAWN	V. TOROMANIAN	5-92	
CHECKED	C. HAMVAS	5-92	

A9508

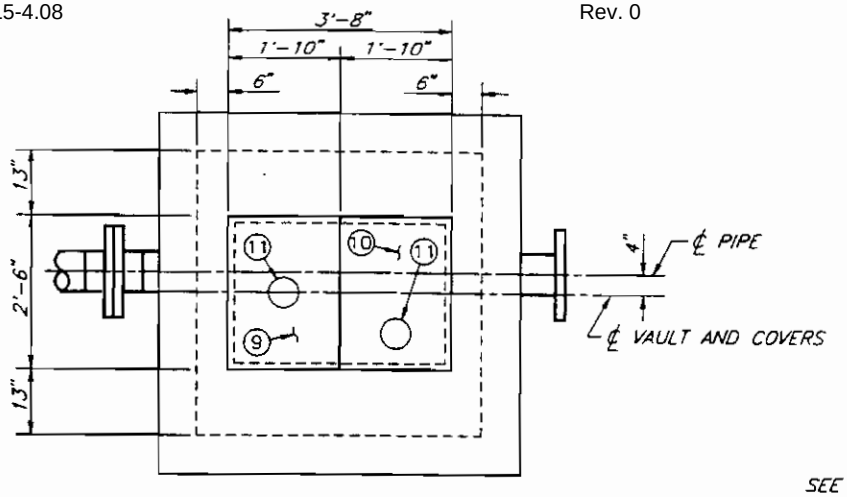

TOP VIEW

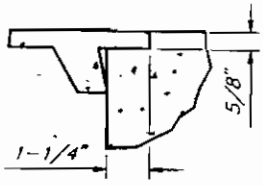

DETAIL

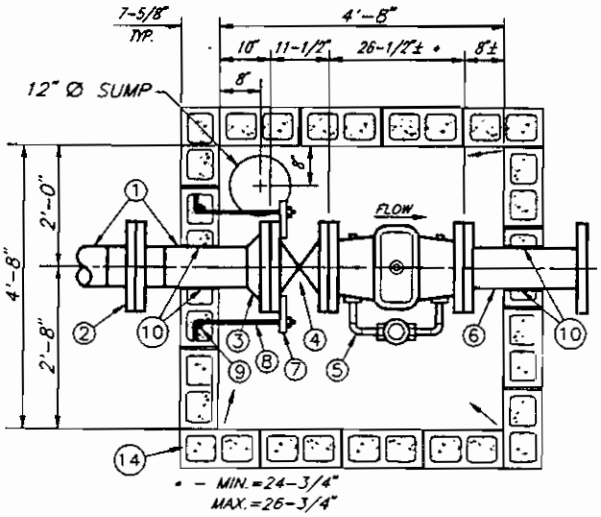

PLAN

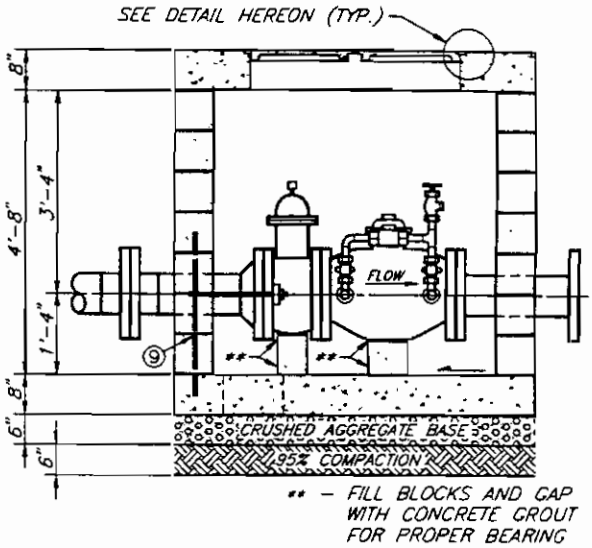

ELEVATION

NOTES:

1. CRUSHED AGGREGATE BASE MATERIAL SHALL BE IN ACCORDANCE WITH THE "STANDARD SPECIFICATIONS FOR PUBLIC WORKS CONSTRUCTION" LATEST EDITION, SUBSECTION 200-2.
2. CONCRETE, CEMENT, REINFORCEMENT, MORTAR, GROUT, AND MASONRY SHALL BE IN ACCORDANCE WITH DWP DRAWINGS B1985-S-1 AND D4353-S-1A.
3. COVERS SHALL NOT ROCK WHEN PLACED ON THE METER COVER OPENING.
4. TOP SLAB SHALL HAVE A NON-SKID SURFACE (BROOM FINISH)
5. THIS DRAWING IS NOT TO SCALE.

MATERIAL LIST

ITEM	QTY.	DESCRIPTION	CODE
1	1	8-5/8" D.D. X 1/4" EN. UC., C.L. & C., S.J., WELDED STEEL PIPE	13-17-477
2	1	8" PRE-ASSEMBLED INS. FLANGE TYPE II-D	13-67-298
3	1	8" X 150# STL. WELD NECK FLANGE	12-17-989
4	1	8" X 200# C.I. FLG. GATE VALVE	12-17-989
5	1	8" OETECTOR CHECK WITH BYPASS METER AND FITTINGS	44-17-600
6	1	8" X 24" C.I. SPOOL (OR OTHER OUTLET FITTING)	11-17-604
7	2	8" STEEL GATE FLANGE BAR	13-17-021
8	2	7/8" DIA VAULT ANCHOR ROD WITH NUT	58-43-930
9	2	#7 X 36" STEEL REBAR	18-08-506
10	VAR.	1/4" FELT EXPANSION JOINT MATERIAL	65-75-603
11	1	#3 REINFORCEO CONC. POLYMER COVER CENTER HOLE (B5096)	39-01-357
12	1	#3 REINFORCEO CONC. POLYMER COVER OFFEND HOLE (B5096)	39-01-358
13	2	C.I. CENTERPIECE	39-01-190
14	112±	8" X 8" X 16" HEAVY STD. CONC. BLOCK	75-04-266

8" FIRE SERVICE IN BLOCK-TYPE VAULT (STL. PIPE)

(SIDEWALK LOADING ONLY)

REVISIONS

NO.	DATE	INIT		APP'D

DEPARTMENT OF WATER AND POWER
WATER SYSTEM — CITY OF LOS ANGELES

	NAME	DATE	APPROVED
DESIGNED	L. NUNO	3-91	B. WEINSTEIN JUNE '92
DRAWN	V. TOROMANIAN	5-92	
CHECKED	C. HAMVAS	5-92	

A9509

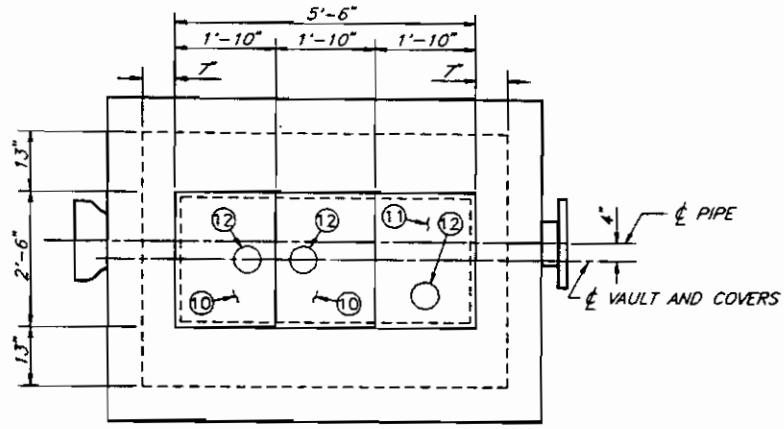

TOP VIEW

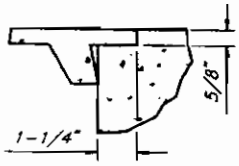

DETAIL

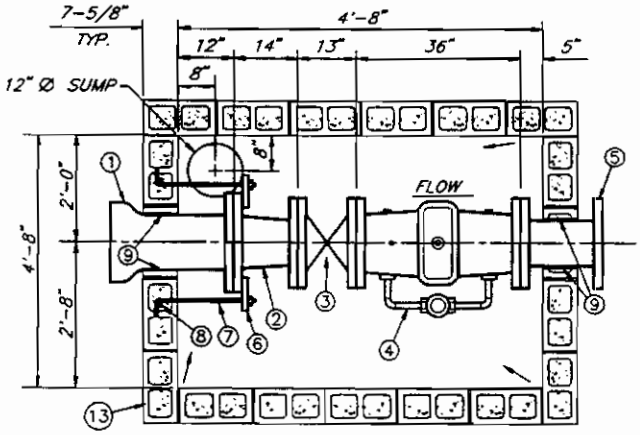

PLAN

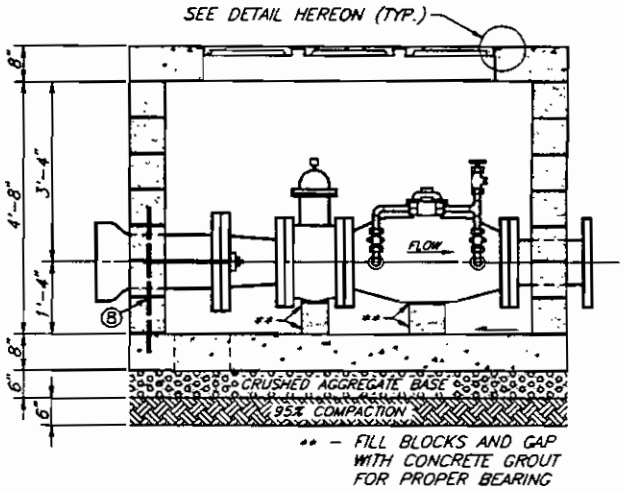

ELEVATION

NOTES:

1. CRUSHED AGGREGATE BASE MATERIAL SHALL BE IN ACCORDANCE WITH THE "STANDARD SPECIFICATIONS FOR PUBLIC WORKS CONSTRUCTION" LATEST EDITION, SUBSECTION 200-2.
2. CONCRETE, CEMENT, REINFORCEMENT, MORTAR, GROUT, AND MASONRY SHALL BE IN ACCORDANCE WITH DWP DRAWINGS B1985-S-1 AND D4353-S-1A.
3. COVERS SHALL NOT ROCK WHEN PLACED ON THE METER COVER OPENING
4. TOP SLAB SHALL HAVE A NON-SKID SURFACE (BROOM FINISH)
5. THIS DRAWING IS NOT TO SCALE

MATERIAL LIST

ITEM	QTY.	DESCRIPTION	CODE
1	1	12" X 27" O.I. R.G. FLG./BELL ADAPTOR AWWA	11-19-003
2	1	12" X 10" C.I. FLG. TAPER REDUCER	11-19-565
3	1	10" X 200# C.I. FLG. GATE VALVE	12-18-989
4	1	10" DETECTOR CHECK WITH BYPASS METER AND FITTINGS	44-18-600
5	1	8" X 18" C.I SPOOL (OR OTHER OUTLET FITTING)	11-18-603
6	2	12" STEEL GATE FLANGE BAR	13-19-021
7	2	7/8" DIA. VAULT ANCHOR ROD WITH NUT	58-43-930
8	2	#7 X 36" STEEL REBAR	18-08-506
9	VAR.	1/4" FELT EXPANSION JOINT MATERIAL	65-75-603
10	1	#3 REINFORCED CONC. POLYMER COVER OFFSIDE HOLE (B5096)	39-01-359
11	1	#3 REINFORCED CONC. POLYMER COMER OFFEND HOLE (B5096)	39-01-358
12	2	C.I. CENTERPIECE	39-01-190
13	133±	8" X 8" X 16" HEAVY STD. CONC. BLOCK	75-04-266

10" FIRE SERVICE IN BLOCK-TYPE VAULT (D.I. PIPE)

(SIDEWALK LOADING ONLY)

A9510

REVISIONS

NO.	DATE	INIT		APP'D

DEPARTMENT OF WATER AND POWER
WATER SYSTEM — CITY OF LOS ANGELES

	NAME	DATE	APPROVED	
DESIGNED	L. NUNO	3-91	B. WEINSTEIN	JUNE '92
DRAWN	V. TOROMANIAN	5-92		
CHECKED	C. HAMVAS	5-92		

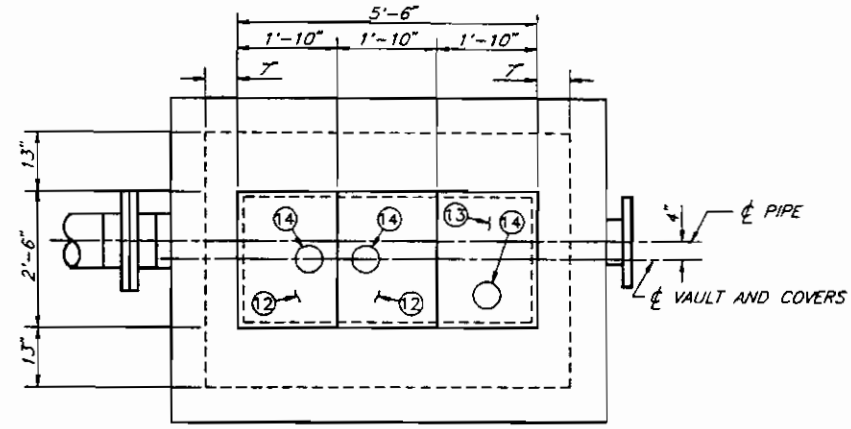

TOP VIEW

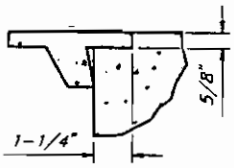

DETAIL

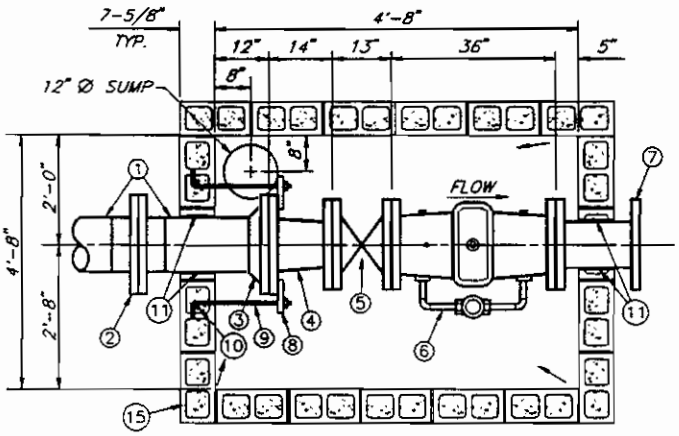

PLAN

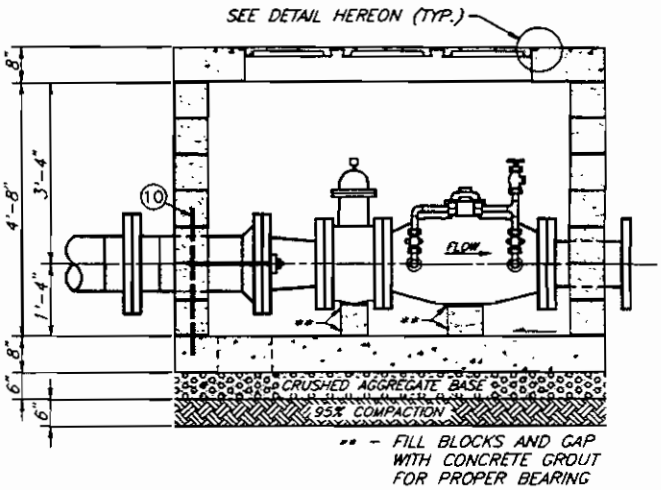

ELEVATION

NOTES:

1. CRUSHED AGGREGATE BASE MATERIAL SHALL BE IN ACCORDANCE WITH THE "STANDARD SPECIFICATIONS FOR PUBLIC WORKS CONSTRUCTION" LATEST EDITION, SUBSECTION 200-2.
2. CONCRETE, CEMENT, REINFORCEMENT, MORTAR, GROUT, AND MASONRY SHALL BE IN ACCORDANCE WITH DWP DRAWINGS B1985-S-1 AND D4353-S-1A.
3. COVERS SHALL NOT ROCK WHEN PLACED ON THE METER COVER OPENING.
4. TOP SLAB SHALL HAVE A NON-SKID SURFACE (BROOM FINISH).
5. THIS DRAWING IS NOT TO SCALE

MATERIAL LIST

ITEM	QTY.	DESCRIPTION	CODE
1	VAR.	12-3/4" O.D. X 1/4" EN. UC., C.L. & C., S.J., WELDED STEEL PIPE	13-19-477
2	1	12" PRE-ASSEMBLED INS. FLANGE TYPE II-D	13-69-298
3	1	12" X 150# STL. WELD NECK FLANGE	13-19-307
4	1	12" X 10" C.I. FLG. TAPER REDUCER	11-19-565
5	1	10" X 200# C.I. FLG. GATE VALVE	12-18-989
6	1	10" DETECTOR CHECK WITH BYPASS METER AND FITTINGS	44-18-600
7	1	8" X 18" C.I. SPOOL (OR OTHER OUTLET FITTING)	11-18-603
8	2	12" STEEL GATE FLANGE BAR	13-19-021
9	2	7/8" DIA. VAULT ANCHOR ROD WITH NUT	58-43-930
10	2	#7 X 36" STEEL REBAR	18-08-506
11	VAR.	1/4" FELT EXPANSION JOINT MATERIAL	65-75-603
12	1	#3 REINFORCED CONC. POLYMER COVER OFFSIDE HOLE (B5096)	39-01-359
13	1	#3 REINFORCED CONC. POLYMER COMER OFFENO HOLE (B5096)	39-01-358
14	2	C.I. CENTERPIECE	39-01-190
15	133±	8" X 8" X 16" HEAVY STD CONC. BLOCK	75-04-266

10" FIRE SERVICE IN BLOCK-TYPE VAULT (STL. PIPE)

(SIDEWALK LOADING ONLY)

A9511

REVISIONS

NO.	DATE	INIT		APP'D

DEPARTMENT OF WATER AND POWER
WATER SYSTEM — CITY OF LOS ANGELES

	NAME	DATE	APPROVED
DESIGNED	L. NUNO	3-91	B. WEINSTEIN JUNE '92
DRAWN	V. TOROMANIAN	5-92	
CHECKED	C. HAMVAS	5-92	

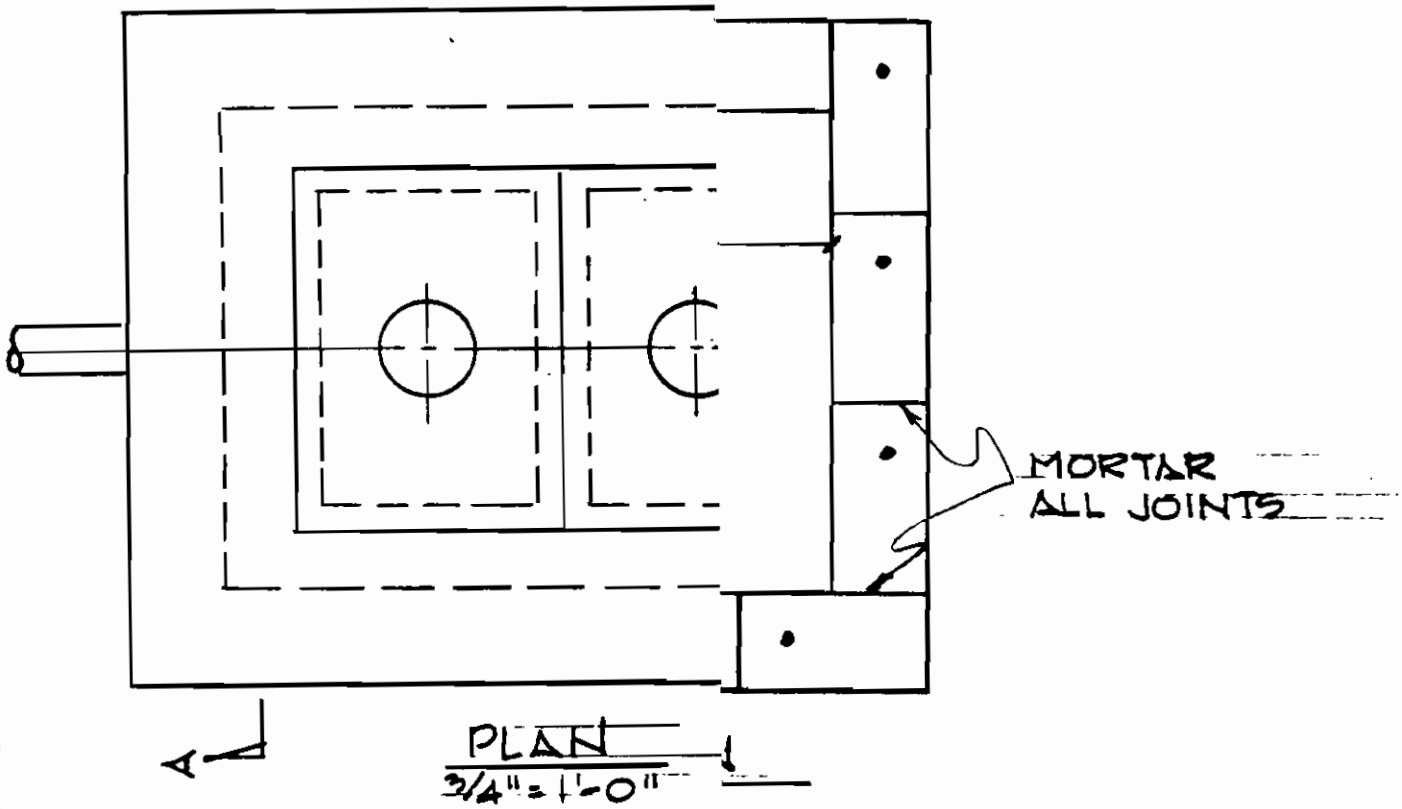

8" JCTION NOTES

SEVE AN ULTIMATE COMPRESSIVE STRENGTH FO28 DAYS AND SHALL CONFORM TO DEPTS.

RM TO STD. SPECS FOR PORTLAND E.

EEL SHALL CONFORM TO THE STD. . CONC. REINF. ASTM A 615, GRADE 40.

AND GROUT SHALL HAVE A COMP- ESS THAN 2000 PSI AT 28 DAYS AND 202-2.1.2 OF THE STANDARD ISTRUCTION.

ONFORM TO ASTM C-90 FOR GRADE M TO SECTION 303-4 OF THE STD. ONSTRUCTION.

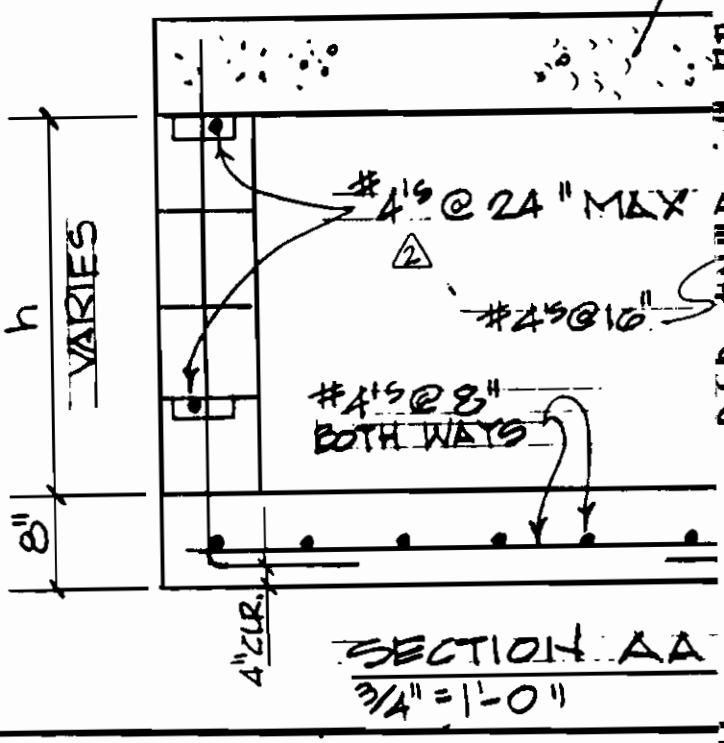

0

REVISIONS			
NO.	DATE	INITIALS	DESCRIPTION
1	7-77	AD	CHANGED DIMENSIONS
2	2-79	AD	ADDED HORIZ. BARS
3	4-88	C.A	REV. SECT. A.A.
4	5-88	C.A.	DWG. REV. & REDRAWN

IC AND FIRE SERVICE
ANDARD VAULTS
N AND ELEVATION

ER AND POWER
CITY OF LOS ANGELES

B1985-S-1

D 4353-S-1A

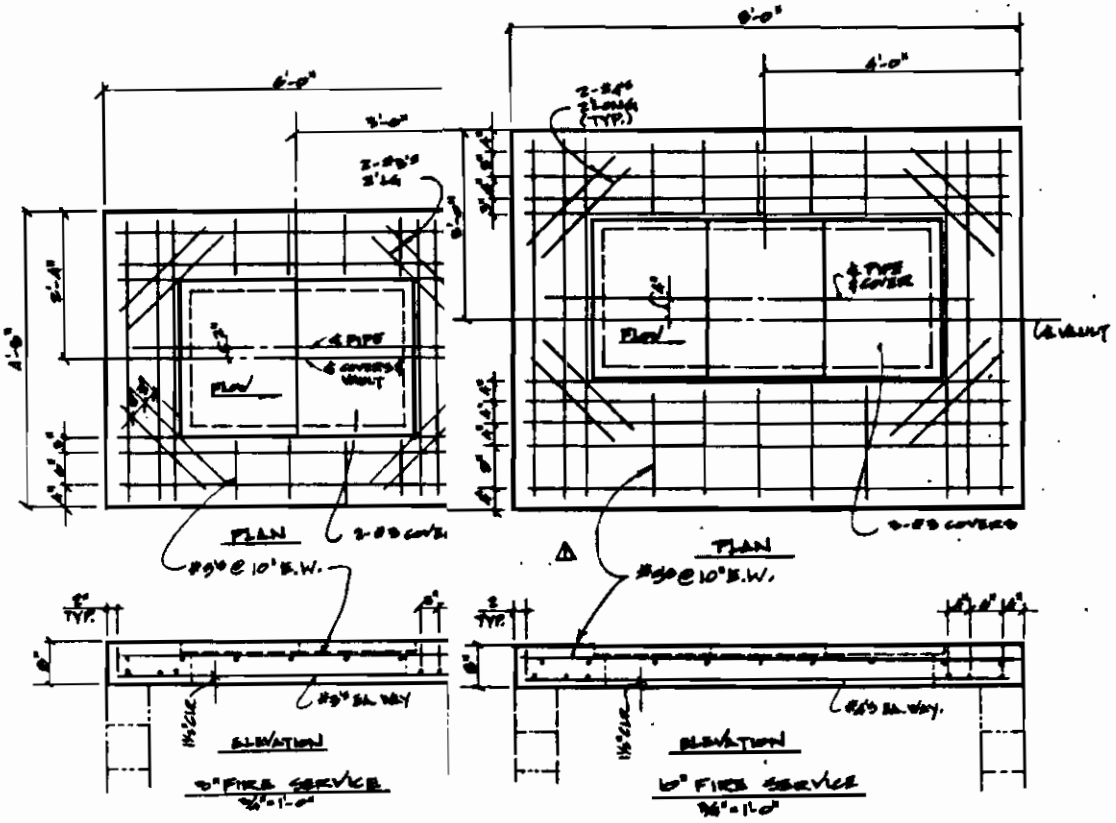

CONSTRUCTION NOTES

CONCRETE: CONCRETE SHALL HAVE AN ULTIMATE COMPRESSIVE STRENGTH OF NOT LESS THAN 3000 P.S.I. AT 28 DAYS AND SHALL CONFORM TO THE DEPT'S. MIX DESIGNATION DWP-3.

CEMENT: CEMENT SHALL CONFORM TO THE STANDARD SPECIFICATIONS FOR PORTLAND CEMENT ASTM C-150, TYPE II.

REINFORCEMENT: REINFORCING STEEL SHALL CONFORM TO THE STANDARD SPECIFICATIONS FOR STEEL BARS FOR CONCRETE REINFORCEMENT ASTM A615, GRADE 40.

MORTAR AND GROUT: MORTAR AND GROUT SHALL HAVE A COMPRESSIVE STRENGTH OF NOT LESS THAN 3000 PSI AT 28 DAYS AND SHALL CONFORM TO SECTION 203-2.1.2 OF THE STANDARD SPECIFICATIONS FOR PUBLIC WORKS CONSTRUCTION.

ANCHORS: ANCHORS SHALL CONFORM TO ASTM C-90 FOR GRADE NH UNITS AND SHALL CONFORM TO SECTION 203-4 OF THE STANDARD SPECIFICATIONS FOR PUBLIC WORKS CONSTRUCTION.

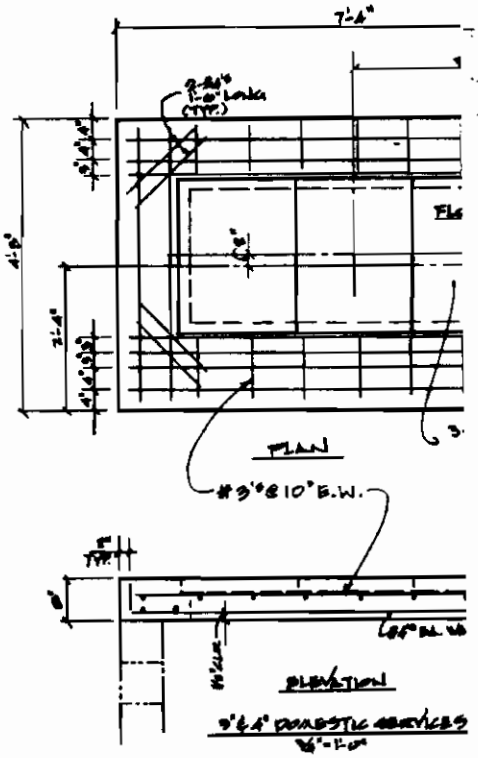

SIDEWALK LOADING ONLY

DOMESTIC AND FIRE SERVICE
STANDARD VAULTS
TOP SLAB REINFORCING

DEPARTMENT OF WATER AND POWER
WATER SYSTEM — CITY OF LOS ANGELES

D 4353-S-1A

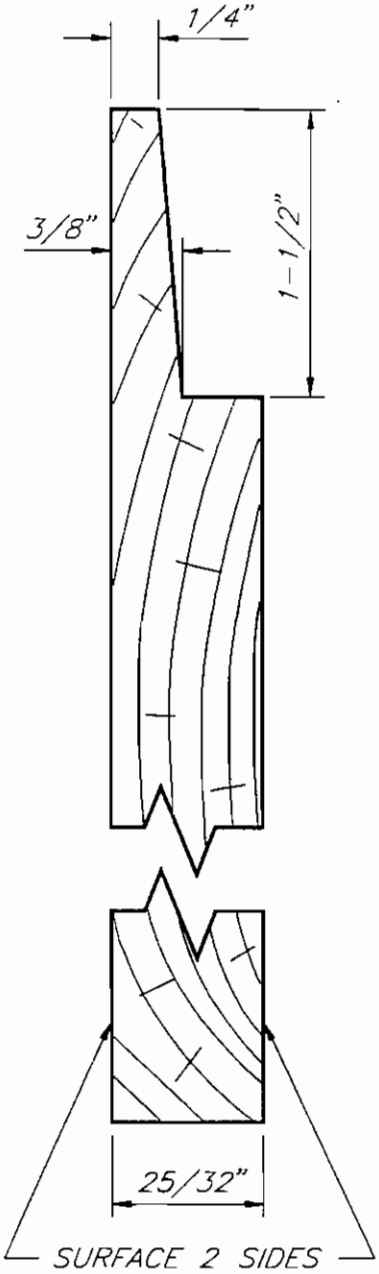

NOTES:

1. 1" X 12" RANDOM LENGTH CONSTRUCTION GRADE DOUGLAS FIR LUMBER SHALL COMPLY WITH THE STANDARD GRADING RULES OF THE WEST COAST LUMBERMEN'S ASSOCIATION, AND SHALL BE IN ACCORDANCE WITH THIS DRAWING.
2. THE LUMBER IS USED FOR FORMING THE TOP SECTIONS OF CONCRETE METER BOXES INCORPORATING COVERS PER DWP STANDARD DRAWINGS A9259, A9260, A9204-1 & 2.

CONCRETE BOX FORM LUMBER

A9302

REVISIONS

NO.	DATE	INIT.		APP'D
	3-92	M.N.	REVISED OLD DRAWING A9302	

DEPARTMENT OF WATER AND POWER
WATER SYSTEM — CITY OF LOS ANGELES

	NAME	DATE	APPROVED
DESIGNED	V. TOROMANIAN	3-92	B Weinstein /CH 7/92
DRAWN	M. NOWAK	3-92	
CHECKED	C. HAMVAS	3-92	

EXHIBIT 1

SAMPLE ACKNOWLEDGMENT LETTER

July 1, 1992

Mr. Laurent McReynolds
Engineer in Charge
of Water Operating Division
Department of Water and Power
P. O. Box 111, Room 1450
Los Angeles, California 90051

Attention Cassandra Hamvas

Dear Mr. McReynolds:

Tract No. 3456789
Located North of Ventura Boulevard and
East of Louise Avenue

I/We hereby acknowledge that the provisions of Section 2.05 ("Engineering") of the Water Operating Division's "Engineering Standards Manual," as last revised, have been read and understood.

_____
JOHN DOE I - Applicant

_____
JOHN DOE II - Design Engineer

EXHIBIT 2

City of Los Angeles

Department of Water and Power

Water Operating Division

REQUEST FOR CONTRACTOR PREQUALIFICATION

Contractor:

1. Enter the type and expiration date of all licenses issued to you by the State of California that you wish to have considered:

2. Provide a list and brief description of recently completed water facility installations and references. Please be specific:

Notes:

1. The minimum liability insurance coverage required is $1,000,000.00. The Department reserves the right to require additional insurance coverage from the Applicant when deemed necessary.

2. Prequalification is subject to yearly application and renewal.

3. The Department reserves the right to require a performance test for contractors or their subcontractors who tap existing mains.

EXHIBIT 3

STANDARD DEDICATION CERTIFICATE FOR ROADWAY EASEMENTS

We also hereby grant and dedicate to the City of Los Angeles forever, for the use of the Department of Water and Power of the City of Los Angeles, those permanent and exclusive easements and rights of way, for the construction, operation, maintenance and removal and replacement, at any time and from time to time, of lines of pipe, of vaults, manholes, service and distribution connections and of all appendages, structures and equipment necessary or convenient thereto, and for the use and operation in, on and over the easement area for its full width, without obstruction or interference of any kind, of every sort and type of machinery and equipment necessary or convenient for such construction, maintenance, removal and replacement, for the purposes of transporting, conveying and distributing water, in, under, on, over and across each and every strip of land shown and designated on said map as a water line right-of-way; and no building or other structure shall ever be placed, constructed or maintained within any such right-of-way.

The Department shall have no obligation for maintenance or repair of the surface of any street or thoroughfare in such Right-of-Way, except for the repair or replacement of surfacing required to be cut or removed by the Department for the purpose or maintaining, repairing, replacing, or removing mains or appurtenances.

EXHIBIT 4

STANDARD DEDICATION CERTIFICATE
FOR NON-ROADWAY EASEMENTS

We also hereby grant and dedicate to the City of Los Angeles forever, for the use of Department of Water and Power of the City of Los Angeles, those permanent and exclusive easements and rights of way, for the construction, operation, maintenance and removal and replacement, at any time and from time to time, of lines of pipe, of vaults, manholes, service and distribution connections and of all appendages, structures and equipment necessary or convenient thereto, and for the use and operation in, on and over the easement area for its full width, without obstruction or interference of any kind, of every sort and type of machinery and equipment necessary or convenient for such construction, maintenance, removal and replacement, for the purposes of transporting, conveying and distributing water, in, under, on, over and across each and every strip of land shown and designated on said map as a water line right-of-way; and no building or other structure shall ever be placed, constructed or maintained within any such right-of-way.

Grantor shall not modify grading, construct surface improvements or structures, plant trees, reduce capacity or alter path of existing surface drainage, park vehicles or store materials directly over the main, or reduce or increase the depth of cover over the main in the easement(s) hereby granted. Grantor will exercise only such reserved rights in said land as will not interfere with or prohibit the free and complete use and enjoyment by Grantee, its successors or assigns, of the easement(s) hereby granted.

Grantor hereby undertakes and agrees to release, hold harmless and indemnify the City of Los Angeles and its Department of Water and Power and all officers and employees of each from and against any and all claims, loss, demands, expense, damage or liability whatsoever for injuries to or death of persons or damage to property in any manner arising out of any failure on the part of Grantor to keep or perform any of the terms or conditions hereof.

EXHIBIT 5

SAMPLE

AGRREMENT FOR INSTALLATION AND TRANSFER
OF TITLE OF WATER SYSTEM FACILITIES

AGREEMENT NO. WO-

This Agreement is entered into and effective as of _____ by and between the DEPARTMENT OF WATER AND POWER OF THE CITY OF LOS ANGELES, hereinafter referred to as the "Developer", who agree as follows:

The Developer is the owner of certain land described as Tract No. and as more fully (or further) shown on Exhibit "A" attached hereto. In developing this land, the Developer is desirous of obtaining a water supply adequate for domestic uses and public fire protection purposes and is desirous of Water System clearance for this project.

In order to provide facilities for a water supply to said land, it is the intention of the parties to this Agreement that the Developer will furnish and install those water mains, fire hydrants, service laterals, valves, and all pertinent fittings, and other facilities required for a complete water system to serve the land shown on Exhibit "A".

In order to implement the foregoing and in consideration of the terms and conditions herein contained, the parties further agree as follows:

1.0 Developer shall design and construct, at the Developer's sole expense, the water facilities and appurtenances in accordance with Department-approved final plans, and in accordance with Department-approved design standards and specifications, and the terms and conditions of this Agreement.

1.1 Design shall be by a Professional Engineer registered in the State of California, hereinafter referred to as the "Design Engineer", in accordance with the Department's Water Operating Division's latest Engineering Standards Manual and Standard Specification No. DWPWS-D101.

1.2 A copy of the Department's Engineering Standards Manual and Standard Specification No. DWPWS-D101 will be provided to the Developer upon payment of applicable charges.

2.0 The Department, at the Developer's expense, shall review the Developer's plans for the purpose of ensuring the adequacy of the design and conformance with the Department's standards and specifications. The Department reserves the right to add, delete, modify, change, or amend any or all the plans and specifications.

2.1 In the event that the property to be developed includes multiple residential, condominiums, commercial or industrial uses, site plans, grading plans and any available plumbing plot plans will be furnished to the Department by the Developer.

2.1.1 During the course of the development and construction of the project, it is recognized that the City of Los Angeles or other regulatory authority may require, or the Developer may agree to, changes in existing streets, facilities or installations which in turn may require the relocation, replacement or addition of water system facilities. In the event that any such changes are required, or agreed to, the Developer shall, within 30 days thereof, submit to the Department for its review and approval the final plans and specifications detailing the Developer's arrangements to accomplish such work. The Developer shall perform any additional water facility work at the Developer's sole cost. All work performed pursuant to this paragraph shall be subject to the terms and conditions of this Agreement and shall be considered a part hereof.

2.2.0 During the course of the development and construction of the project, it is further recognized that unforeseen circumstances including, but not limited to, surface or subsurface geological and earth features and the presence of artificial structures and/or equipment may prevent the construction of the system as theretofore designed and that changes in the design and construction will be required because of the aforementioned unforeseen circumstances. In such event, the Design Engineer will modify the design to accommodate said unforeseen circumstances to the satisfaction of the Department. The Developer will pay the Department any applicable costs associated with such redesign in accordance with Paragraph 12 herein.

2.2.1 The Department retains in its sole and exclusive discretion, the option to perform such additional work itself. In the event the Department exercises such option, the Developer shall pay the Department's current costs in accordance with Paragraph 12 herein, for such additional water facility work.

3.0 The Developer shall procure, at the Developer's own expense, all licenses, guarantees, approvals and certificates of inspection which are required by the laws, ordinances, rules, regulations or codes of all government bodies having jurisdiction over said construction and property and shall, in addition, comply with all the requirements thereof.

3.1 Excavation/resurfacing permits will be secured by the Department at the Developer's expense. Permits/easements to install, maintain and operate Water System facilities in private property shall be secured by the Developer at the Developer's own expense.

4.0 The water system facilities to be installed pursuant to this Agreement will become an extension of the distribution system of the Department. All materials used must conform with Department specifications for such materials.

4.1.0 Procurement of materials will be the sole responsibility of the Developer.

4.1.1 The Developer may furnish a list of materials unobtainable from other sources, which Developer desires to purchase from the Department. The Developer will be required to show evidence, satisfactory to the Department, that purchase of the requested material is unobtainable through suppliers of such materials. In the event the Department concurs that certain materials are unobtainable, it agrees to supply those materials, which shall be paid for by the Developer as provided herein.

4.1.2 The Developer may receive purchased materials F.O.B. at the Water System's after full prior payment therefor. An advance notice of at least two (2) working days shall be given by Developer to the Department for pickup of these materials by contacting Mr. Terry Okamura at (213) 580-3890. All materials are subject to availability, and delivery is guaranteed only on Department-stocked materials.

5.0 Any notice, demand, request, consent, approval, or communication that either party desires or is required to give to the other party or any other person shall be in writing and either served personally or sent by prepaid, first-class mail and shall be addressed to the other party at the address set forth below. Either party may change its address by notifying the other party of the change of address. Notice shall be deemed communicated within 24 hours from the time of mailing if mailed as provided in this paragraph.

DEVELOPER:

_____

_____

_____

DEPARTMENT OF WATER AND POWER:

Mr.

111 North Hope Street, Room 1425
Los Angeles, California 90012
Attention M
Phone No. (213) 580-

5.1.0 The Developer shall give written notice to the Department at least five (5) days before initially starting work under this Agreement.

5.1.1 The Developer and Contractor shall attend a preconstruction meeting with the Department at the Department's General Office Building located at 111 North Hope Street, Los Angeles, no less than fourteen days prior to commencement of work.

5.1.2 No work on water facilities shall commence prior to the completion of all required curbs and gutters.

6.0 All work and materials shall be subject to inspection and testing by the Department at the Developer's expense. In the event the Developer arranges to have materials fabricated for the project, the Developer may be required to arrange for the Department to inspect that material during fabrication.

6.1 All material fabrications must conform with Department standards and specifications.

6.2 The Department's inspectors shall have unlimited access to perform continuous inspection and have the authority to stop work at any time, by written notice, without any liability whatsoever to the Department, if, in the inspectors' judgment, the work called for by this Agreement or the plans, or the specifications are not being installed or performed in a satisfactory and workmanlike manner according to Department standards and specifications and/or in the event the materials do not comply with the Department's standards and specifications.

6.3 Final acceptance by Developer of all material to be purchased or fabricated by Developer under this Agreement shall be made only with the prior approval of the Department. Approval by the Department, however, shall not operate to relieve the material supplier or the Developer of any guarantees, warranties, or the duty of compliance with any of the requirements of the approved plans and specifications or of this Agreement.

7.0 The Developer shall and by this Agreement does guarantee the Developer's faithful performance of this Agreement and all of its terms and conditions by providing the following:

7.1.0 The Developer shall provide the Department with a Letter of Credit, presentable in Los Angeles, from a financial institution licensed by the State of California and authorized to do and doing business in said State, valid for the length of this Agreement, approved by the City Attorney and accepted by the Department.

7.1.1 The Letter of Credit shall be in the amount of $

7.1.2 The Developer shall, in addition, and by this Agreement does guarantee to the Department that for one year after the acceptance of the Developer-installed and completed water facilities and appurtenances they shall be free from any and all liens and encumbrances and free from any and all defects in the materials or construction thereof. This one-year guarantee shall be an Irrevocable Letter of Credit in the amount of $, beginning at the date of the acceptance of the water facilities by the Department.

7.2 Upon acceptance of a Letter of Credit in the amount provided herein and approval by the City Attorney and upon payment of applicable charges, pursuant to Paragraphs 12.0, the Department shall notify the City Engineer that said Letter of Credit has been provided to the Department guaranteeing payment of the cost of installing the water system facilities and appurtenances.

8.0 In order for the Department to accept the facilities, the Developer shall provide the following:

8.1 The Developer shall submit to the Department a field notes drawing prepared by the contractor or Developer's representative in accordance with the Department's latest "Field Notes and As-Constructed Manual".

8.2 The Developer shall, in addition, submit as-constructed drawings prepared by the Design Engineer in accordance with the Department's latest "Field Notes and As-Constructed Manual".

8.3 The Developer shall submit to the Department for accounting purposes, the total cost for furnishing and installing the water system facilities, itemized by size of water mains, type of pipe, type of fire hydrants and size of service laterals.

9.0 The following options may be exercised by the Department:

9.1 The Department may require a Galvanic Cathodic Protection System designed and installed by someone under the direct supervision of or by a Corrosion Specialist certified by the National Association of Corrosion Engineers or a Corrosion Engineer registered by the State of California. The Department retains the option of installing the Galvanic Cathodic Protection System. Department personnel shall be permitted access to perform the installation of Cathodic Protection facilities during the construction of the Water Supply System.

9.2 The Department retains the option to furnish all labor and material to perform the required hydrostatic test of the water system.

9.3 These options will be exercised by the Department, if at all, at the time of plan approval.

10.0 The Developer accepts the responsibility for and the costs occasioned by any reconstruction, relocation, damages to or changes of water services or facilities caused or contributed to directly or indirectly by any subsequent changes in the location of any of said facilities or water meters or water services.

11.0 In no event will permanent water service be provided to the Developer's installed system until all applicable charges have been paid by the Developer and all facilities have been conveyed to the Department, including any easements which may be required. Such conveyance shall occur in a timely manner in accordance with the terms of Paragraph 15.

12.0 The Developer shall pay the Department for all costs and charges in accordance with the following:

12.1.0 Payment of 'actual cost' by the Developer shall be the actual direct costs and indirect costs incurred by the Department for such activities, work performed, materials acquired, contracts let or permits obtained under the terms of this Agreement.

12.1.1. Direct costs shall include, but not be limited to, direct labor, materials and equipment cost used specifically for work performed under this Agreement. Indirect cost shall include, but not be limited to, administrative and general expenses, retirement and death benefits, health care costs, supervision and engineering and tool expenses. Indirect costs shall be charged at the Department's in-house percentage rate calculated by the Department's Accounting Division.

12.1.2 The cost for Department-supplied material pursuant to Paragraph 4 will be at the current Department warehouse material cost in effect at the time the material is issued, plus current Department material handling charges for warehouse materials and applicable taxes.

12.2.0 A charge of $6.00 per lineal foot of main to be installed, plus $60.00 each for 2-inch and smaller domestic service laterals plus $115.00 each for other service and fire hydrant laterals as shown on Exhibit "B" shall be paid by the Developer. In the event the aggregate of such charges does not exceed $2,000.00, a minimum charge of $2,000.00 shall apply. This charge will cover the following work items performed by the Department:

Review of Construction Plans and Specifications
Engineering Supervision
Review of Field Notes and As-Constructed Drawings (Final)
Valve Operation
Construction Inspection
Sanitization
Contract Administration
Preparation of Agreements

12.2.1 The costs for Department-furnished Cathodic Protection, materials inspection and testing, and hydrostatic testing shall be based on the actual time and materials used by Department personnel.

12.2.2 Any applicable charges for meters and installation of meters and meter boxes shall be the current cost from the Department's Water Facility Charges.

12.2.3 All actual costs for (or from the Department's Water Facility Charges, if applicable) all Department work or material performed pursuant to the provisions of this Agreement.

12.2.4 All existing water main charges, acreage supply charges, and main connection charges.

12.2.5 All costs for all applicable water fees, permits, licenses, material purchases, special estimates and other charges or costs as may be required in accordance with this Agreement and Department Rules and Regulations.

12.3 The Developer shall pay any or all taxes assessed upon the water facilities being constructed pursuant to this Agreement.

12.4 The Developer shall make payment to the Department within 30 days upon presentation of any bill prepared in accordance with this Agreement, unless payment prior to a service or delivery of material is required. The calculation of all costs and charges by the Department will be made on the Department's costs and charges current at the time service is rendered.

13.0 The Developer acknowledges and represents that it assumes full responsibility for any injury to any person or damage or destruction to any property by reason of the work to be performed, materials to be ordered and delivered, or the obligations of the Department and the Developer undertaken pursuant to this Agreement and expressly undertakes and agrees to release and hold harmless and indemnify the Department and all its officers, employees, and agents from and against all suits and causes of action, claims, loss, demands, expenses, damage or liability of any nature whatsoever, save and except for its sole negligence or sole willful misconduct, for death or injury to the Developer, its agents and contractors, their agents and employees, to the Department, its employees, agents and contractors, their agents and employees, or to third persons or damage or destruction to any property of either party hereto or of third persons in any manner arising by reason or incident to the work to be performed, materials to be ordered and delivered or the obligations of the Department and the Developer undertaken pursuant to this Agreement whether or not contributed to by any act or omission, active or passive, negligent or otherwise, of the Department, or any officers, employees or agents thereof and will make good to and reimburse the Department for any expenditures including reasonable attorney's fees the Department may make by reason of such matters and if requested by the Department will defend any such suits at the sole cost and expense of the Developer.

14.0 The Developer and/or the Developer's primary contractor, not later than the effective date of this Agreement and, in any event, prior to the start of work, shall furnish the Department evidence of insurance coverage in the form of the Department's Additional Insured Endorsement form and/or a Special Endorsement

form of insurance for certain designated coverages as specified hereinafter which shall be maintained by the Developer's sole cost and expense. The Developer's insurances shall be primary and not contributing with any other insurance maintained by the Department and shall include a severability-of-interest or cross liability clause.

All such evidence of coverage shall be subject to the approval of the Office of the City Attorney, Water and Power Division, as to compliance with these provisions. Each policy hereinafter specified shall contain a provision that the policy cannot be cancelled or reduced in coverage or amount without first giving 30 days' notice thereof by receipted delivery, to the City Attorney, c/o , Department of Water and Power, P. O. Box 111, Room 1425, Los Angeles, California 90051.

14.1 Workers' Compensation Insurance covering all of the Developer's employees, and all contractor's employees, shall be furnished in accordance with the laws of any state in which the work is to be performed and including Employer's Liability insurance which shall have a limit of not less than $1,000,000 each accident.

Evidence of Workers' Compensation and Employers' Liability coverages shall be in the form of the Department's Special Endorsement form.

The Developer shall require the carrier(s) providing Workers' Compensation and Employers' Liability to waive all rights of subrogation against the City of Los Angeles, the Board of Water and Power Commissioners of the City of Los Angeles, the Department of Water and Power of the City of Los Angeles, and their officers, agents, and employees.

14.2 The General Liability Insurance shall be of the Comprehensive form if available and the Commercial form if not and shall include Contractual Liability, Independent Contractors, Products/Completed Operations, Broad Form Property Damage, Personal Injury, and Explosion, Collapse and Underground coverages and shall provide for limits of not less than $1,000,000 Combined Single Limit. The Products/Completed Operations coverage shall be maintained for two years following final acceptance of the work under this agreement.

The Comprehensive Automobile Liability Insurance shall include coverages for owned, non-owned, hired, and leased automobiles and shall provide for limits of not less than $1,000,000 Combined Single Limit. The Comprehensive Automobile Liability may be a separate policy or can be included with the Comprehensive General Liability.

Evidence of Comprehensive General Liability and Comprehensive Automobile Liability shall be in the form of the Department's Additional Insured Endorsement forms.

14.3 The Developer may use an Umbrella or Excess Liability coverage to meet coverage limits as specified in Paragraphs 14.1 and 14.2. Evidence of Excess Liability shall be in the form of the Department's Additional Insured Endorsement form. The Developer shall require the carrier for Excess Liability to properly schedule and identify the underlying policies as provided for on the Additional Insured Endorsement form, including as appropriate, Comprehensive General Liability, Comprehensive Automobile Liability, and Employers' Liability.

14.4 Each policy specified in Paragraphs 14.2 and 14.3 shall include the City of Los Angeles, the Board of Water and Power Commissioners of the City of Los Angeles, the Department of Water and Power of the City of Los Angeles, and their officers, agents, and employees while acting within the scope of their employment, as additional insureds with the Developer, and shall insure against liability for death, bodily injury, or property damage allegedly arising out of, or in connection with, the work to be performed under this agreement.

14.5 The foregoing requirements as to types, limits and the Department's approval of insurance coverage to be maintained by the Developer are not intended to, and shall not in any manner, limit or qualify the liabilities and obligations assumed by the Developer under this contract.

15.0 The Developer shall furnish an itemized Bill of Sale or other acceptable document transferring title and ownership of the completed facility and shall request in writing the formal acceptance of the installed facilities when all applicable conditions of this Agreement have been completed. Upon compliance with all of the terms and conditions of this Agreement, the Department will mail a written notice of acceptance thereof, to the address provided herein. Title to the ownership of said facilities and appurtenances shall thereby be conveyed to the City of Los Angeles and the Department of Water and Power. The Department will thereafter operate and maintain said facilities so as to furnish water service to the development (Exhibit "A") in accordance with the Department's Rules and Regulations.

16.0 The Department's failure to enforce any provisions of this Agreement or the waiver thereof in any instance shall not be construed as a general waiver or relinquishment on its part of any such provision, but the same shall nevertheless be and remain in full force and effect.

DEPARTMENT OF WATER AND POWER OF
THE CITY OF LOS ANGELES

By _____

DANIEL W. WATERS
General Manager and Chief Engineer

DEVELOPER

By _____

_____

Title

Date _____

COMPANY

STATE OF CALIFORNIA)
) SS.
COUNTY OF _____)

On _____ before me, the undersigned, a Notary Public in and for said State, personally appeared _____ _____ personally known to me or proved to me on the basis of satisfactory evidence to be the person who executed the within instrument as the _____ President, and _____ personally known to me or proved to me on the basis of satisfactory evidence to be the person who executed the within instrument as the _____ Secretary of the Corporation that executed the within instrument and acknowledged to me that such corporation executed the within instrument pursuant to its by laws or a resolution of its Board of Directors.

WITNESS my hand and official seal.

Signature _____

INDIVIDUAL

STATE OF CALIFORNIA)
) SS.
COUNTY OF _____)

On _____ before me, the undersigned, a Notary Public in and for said State, personally appeared _____ _____ personally known to me or proved to me on the basis of satisfactory evidence to be the person(s) _____ whose name(s) _____ subscribed to the within instrument and acknowledged that _____ executed the same.

WITNESS my hand and official seal.

Signature _____

FIELD NOTES AND AS-CONSTRUCTED DRAWINGS MANUAL

WATER OPERATING DIVISION

Los Angeles DWP Department of Water and Power

TABLE OF CONTENTS

CHAPTER 1 - FIELD NOTES

Section	Page	Title
1.01	1	General
1.02	1	Review of Existing Field Conditions and Recording of Field Data
1.03	2	Field Measurements
1.04	8	Field Notes

CHAPTER 2 - CREATING THE "AS-CONSTRUCTED DRAWING

Section	Page	Title
2.01	17	General
2.02	17	Transfering Field Notes to the "As Constructed" Drawing
2.03	17	Drafting Space Management
2.04	17	Delivery of Field Notes and the "As-Constructed" Drawing

TABLE OF CONTENTS

APPENDIX

Exhibit	Page	Title
1	21	Standard Drafting Symbols
2	24	Standard Abbreviations
3	26	Reading Survey Markers and Measuring from Survey Points
4	28	Glossary

TABLE OF CONTENTS

LIST OF FIGURES

Figure	Page	Title
1	6	Typical Lateral and Longitudinal Measurements
2	6	Unusual Longitudinal Measurements
3	7	Pipe Footage
4	14	Sample "Field Notes" Drawing for the Area North of Mulholland Drive
5	15	Sample "Field Notes" Drawing for the Area South of Mulholland Drive
6	19	Sample "As-Constructed" Drawing for the Area North of Mulholland Drive
7	20	Sample "As-Constructed" Drawing for the Area South of Mulholland Drive

CHAPTER 1

FIELD NOTES

1.01 GENERAL

"Field notes" is the term used to describe the collection of field data including "as-constructed" data. It is important that accurate and legible field notes be taken on a continuous basis during construction. The field data collected will eventually be compiled in the form of an "as-constructed" drawing by the Developer's representative, and tab sheets by Department personnel. Submittal to the Department of the original field notes and the "as-constructed" drawing is a requirement for acceptance by the Department of the facilities installed.

1.02 REVIEW OF EXISTING FIELD CONDITIONS AND RECORDING OF FIELD DATA

One copy of the approved construction drawing stamped "FIELD NOTES" is to be used to compare data shown on the drawing with existing field conditions and for recording actual field data This copy will be provided to the Developer during the preconstruction meeting. It shall be kept flat, clean, and dry at all times since it has to be returned to the Department together with the "as-constructed" drawing after the job is completed. Any discrepancies in existing field conditions or deviations in construction from this drawing shall be promptly reported to the Department's Inspector ("Inspector"). Changes shall be explained and shown on the same drawing after approval by the Inspector.

All substructure information shown on the approved construction drawing was obtained from previous project drawings and substructure maps. If the excavation reveals new or different substructure information, this should be marked on the "field notes" drawing.

All material listed on the "field notes" drawing is to be field checked and verification of its correctness indicated on same by placing a check mark (✓) next to each item installed, as shown in figures 4 and 5. Fittings added during construction should be posted in an appropriate place on the "field notes" drawing, and fittings called out on the field construction drawing but not installed should be crossed out.

Field data shall be recorded on the "field notes" drawing by using the following color code:

Red - For all original field measurements, verifications, and new pipe on details.

Blue - For in-field corrections of original field measurements (red), and for existing pipe on connection details.

Black - (lead pencil) For in-office corrections of field measurements (red or blue).

When making corrections on the "field notes" drawing, be sure that all data crossed out remains legible.

1.03 FIELD MEASUREMENTS

Prior to starting installation of the Main Extension, the location of all survey points, right of way lines, centerlines, curbs, and existing substructures adjacent to the main extension are to be verified against the "field notes" drawing. This is accomplished by circling in red all correct dimensions, and crossing out and correcting in red all wrong dimensions. All structures (on, above and below the surface) and survey points should exhibit above a common basis of measurement, and any variance is to be noted on the "field notes" drawing. The Inspector and Developer's field representative shall be informed of all significant corrections so that appropriate steps can be taken to change the design if necessary.

During installation of the Main Extension, measurements are to be made and recorded on the "field notes" drawing under the following rules:

A. Measurement Accuracy: Vertical measurements are recorded to the nearest whole inch. Lateral and longitudinal measurements are recorded to the nearest whole foot.

B. Vertical Measurements: Depth, also called "cover", is the vertical distance measured in inches from the top of the pipe (or other substructure) to the top surface of the most permanent and convenient street structure.

Depth is measured at all tees, crosses, bends, connections, points of pipe depth variation of four (4) inches, and at intervals of one hundred (100) feet along the main, or every fifty (50) feet in areas with numerous crossing substructures.

The order of preference for depth measurement in paved streets is pavement, top or curb, and survey points. The order of preference in unpaved streets is from top of curb, survey points, graded surface, and natural ground surface.

Following is an explanation of how cover is obtained under various specific field conditions:

1. Existing Pavement: Where the water Main Extension is in a street with existing pavement in good condition, the

depth may be obtained by referencing from the surface of the pavement. For example, a cover of forty-one (41) inches would be represented on the "field notes" drawing as: 41"P . But if pavement reconstruction or street widening is anticipated, or if the pavement has an excessively high crown, the existing curb should be used if it is in good condition, otherwise the existing pavement with cover measurements adjusted to reflect anticipated changes in pavement elevation should be used.

2. Existing Curb: When referencing to top of curb, cover is obtained by horizontally projecting a line perpendicular to the face of the curb from the top of the curb to the imaginary vertical line over the pipe. If the pipe is parallel to the property line but not the curb, the projected line should be perpendicular to the property line. For example, a cover of fifty-four (54) inches from top of curb would be represented on the "field notes" drawing as: 54" C

3. Future Curb: In areas where curbs are proposed but not yet constructed, survey points, with accurately calculated "Top of Curb" elevations should be used to measure the depth. For example, a cover of fifty-four (54) inches at Station 2+49.00 would be represented on the "field notes" drawing as: 54"FC
2+49.00

Exhibit 3 of the Appendix has additional details on field surveying.

4. Proposed Pavement: In areas where pavement with gutter but not curbs are proposed, survey points with accurately calculated gutter flowline elevations should be used to measure the depth. For example, a cover of thirty-one (31) inches at Station 3+32.00 would be represented on the "field notes" drawing as: 31"FL
3+32.00

5. Graded Surface And Natural Ground Surface: Where the Main Extension is in a graded or natural ground area, cover is obtained by referencing from the finished ground surface, and also from survey elevation points. For example, a cover of thirty-eight (38) inches at Station 2+37.51 (top of pipe elevation of 720.82 feet) would be represented on the "field notes" drawing as: 38"G
2+37.51
El. 720.82

C. Lateral Measurements: Lateral measurements are generally made along a horizontal line perpendicular to the street centerline, property line, or curb; not perpendicular to the pipe. Location of facilities in the area north of Mulholland Drive is made by measuring along the horizontal line perpendicular to the street centerline, from the latter to the center of the facility being located. Figure 1 shows a tee for a large service lateral located five (5) feet from centerline.

Location of facilities in the area south of Mulholland Drive is made by measuring along the horizontal line perpendicular to the nearest property line, from the latter to the center of the item being located. Figure 1 shows a tee for a large service lateral located twenty (20) feet from property line.

For streets where the main is parallel to the curb but not to the street centerline or property line, facilities are located by measuring along the horizontal line perpendicular to the nearest curb, from the face of the curb to the center of the facility being located. Figure 2 shows a main in Main Street located four (4) feet from the nearest curb.

D. Longitudinal Measurements: Longitudinal measurements are generally made parallel to the pipe along the existing ground surface.

Location of facilities in the area north of Mulholland Drive (including meters), is made by measuring along the longitudinal street centerline, from the nearest point of intersection of street centerlines (centerline P.I.) to the point that when projected to the facility being located, forms a perpendicular line to the longitudinal street centerline. Figure 1 shows a tee and gate valve on a large service lateral located ninety (90) feet from the street centerline.

Location of facilities in the area south of Mulholland Drive (excluding meters), is made by measuring along the pipe from the point where the pipe intersects the nearest crossing property line (produced), to the center of the facility being located. Location of meters in the area south of Mulholland Drive is usually made by measuring along the nearest longitudinal property line, from the point where it intersects the nearest crossing property line (produced) to the point that when projected to the meter being located, forms a line perpendicular to the nearest longitudinal property line (produced). Figure 1 shows a tee and gate valve on a large service lateral located fifty-five (55) feet from property line and the meter for the same service located forty-six (46) feet from property line.

Exceptions to the general guidelines established above will come up; such as an intersection of curving streets. For the area north of Mulholland Drive, the general guidelines should be followed. For the area south of Mulholland Drive, facilities are located by measuring along the pipe from the nearest cross street curb B.C. or property line B.C. to the center of the facility being located. Figure 2 shows a tee in Main Street, located fourteen (14) feet from the southerly property line B.C. of Mountain Avenue.

Other unusual cases might come up that require a practical approach, such as a multicurved street as shown pm Figure 2. In this case, a bend in Mountain Avenue is located by measuring along the pipe from the point of reverse curve (P.R.C.) of property line to the center of the bend. Note also that a bend in Main Street is located by measuring along the pipe from both the property line B.C. (1 foot), and curb B.C. (5 feet), to the center of the bend.

In the area north and south of Mulholland Drive, reference to the appropriate line is required for all connecting fittings, gate valves, tees, crosses, bends, reducers, plugs, blow-offs, air valves, fire hydrants, services, insulating joints, and other appurtenances.

E. Pipe Footage: Pipe footage is determined by measuring the distance along the pipe from the center of a line fitting to the center of an adjacent line fitting (service taps smaller than four-inch (4") are not considered line fittings within this context). Pipe installed on a curving street, using the "on street centerline" method to locate fittings, must also be measured "on pipe" to determine the actual footage of pipe installed. In general, all pipe installed, including fittings (e.g. gate valves, reducers, bends, tees) is listed as pipe footage on the "field notes" drawing. Figure 3 illustrates how pipe footage is called out on the "field notes" drawing.

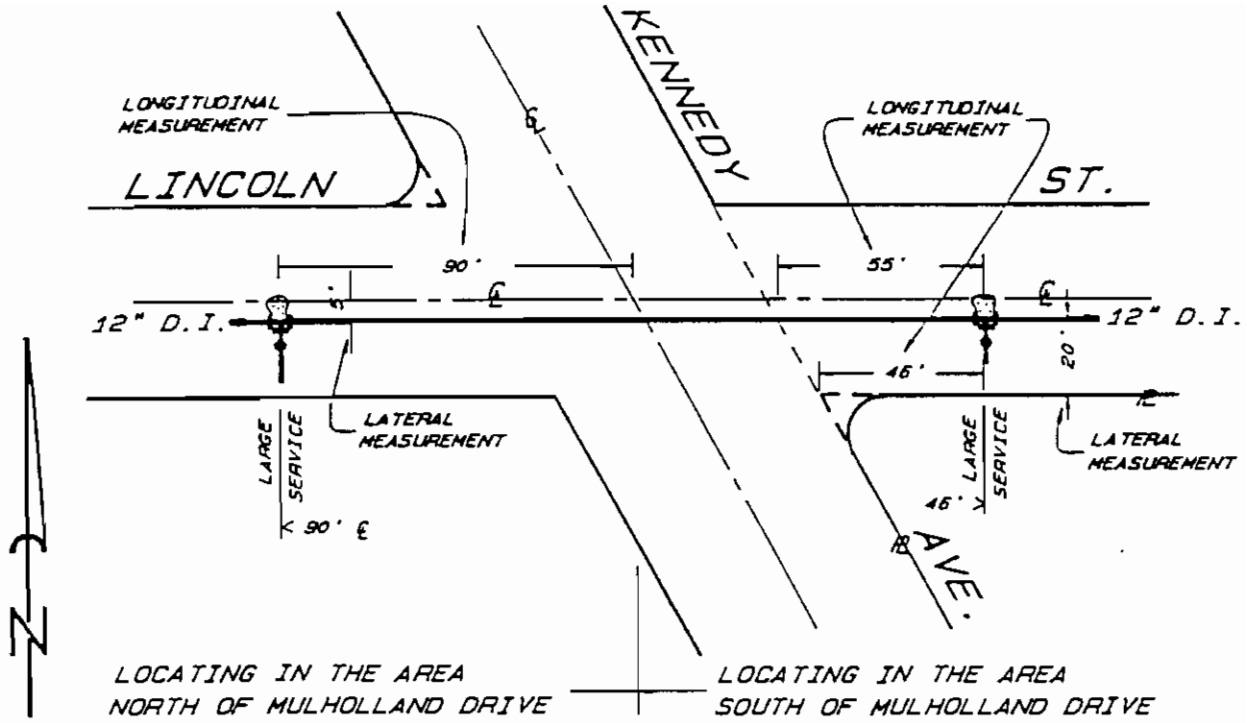

FIGURE 1
TYPICAL LATERAL AND LONGITUDINAL MEASUREMENTS

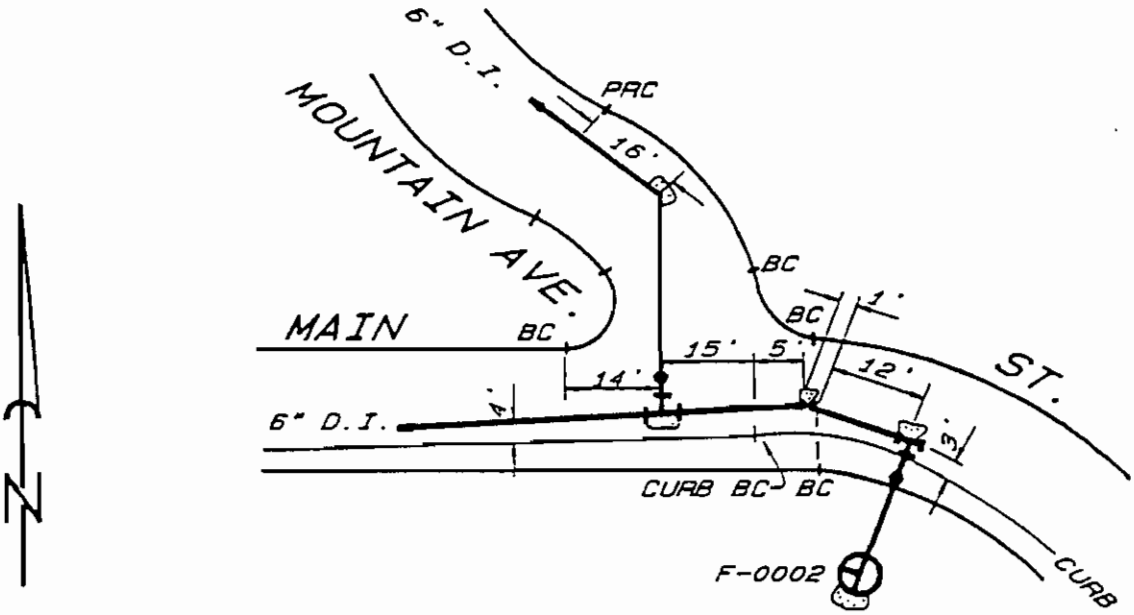

FIGURE 2
UNUSUAL LONGITUDINAL MEASUREMENTS

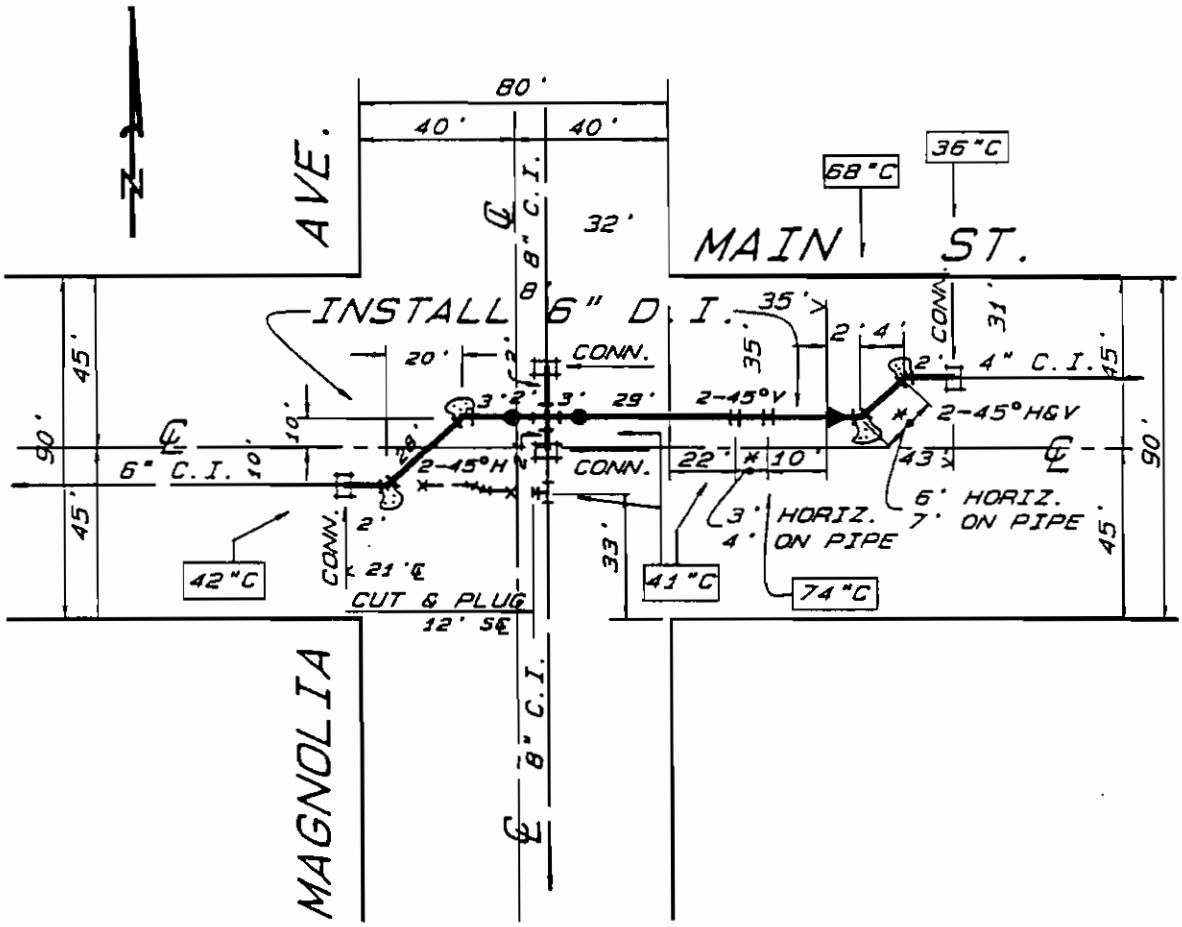

LOCATING IN THE AREA NORTH OF MULHOLLAND DRIVE

LOCATING IN THE AREA SOUTH OF MULHOLLAND DRIVE

FIGURE 3
PIPE FOOTAGE

1.04 FIELD NOTES

The following data and the location (per Section 1.03) of each item installed is to be gathered and recorded on the "field notes" drawing by the Developer's field representative. This data will be used by Department personnel to prepare "tab sheets", which together with the "as-constructed" drawing, make up the Department's permanent construction record known as the Pipe Location Report (PLR). This data, except for items flagged by an asterick (*), is to be transferred to the "as-constructed" drawing by the Design Engineer.

Sample "field notes" drawings for the areas north of Mulholland Drive and south of Mulholland Drive are shown on Figures 4 and 5, respectively.

A. PIPE

1. Ductile Iron Pipe
   - a. Footage
   - b. Nominal diameter
   - c. Thickness of pipe wall
   - d. Material
   - e. Type of joint
   - f. Specification (e.g., AWWA)
   - *g. Manufactured pipe length
   - *h. Name of manufacturer

2. Steel Pipe
   - a. Footage
   - b. Outside diameter
   - c. Thickness of pipe wall
   - d. Type of undercoating
   - e. Type of coating
   - f. Type of lining
   - g. Type of joint (e.g., slip)
   - h. Material
   - *i. Manufactured pipe length

3. Copper Tubing
   - a. Footage
   - b. Material
   - c. Nominal diameter
   - *d. Type of solder or joint
   - *e. Manufactured pipe length

B. C.I./D.I. PIPE FITTINGS

1. Valves
   - a. Quantity
   - b. Type (e.g., Gate, Check)
   - c. Nominal diameter

*d. Make (i.e., manufacturer)
e. Pressure rating
*f. Direction and number of turns to open
*g. Gate valve disk surface (e.g., solid wedge, double disc, resilient wedge)
h. Type of joint (e.g., hub-end, R.G., flg.)

2. Nipples
a. Quantity
b. Nominal diameter
c. Thickness of pipe wall
d. Length
e. Material
f. Specification (e.g., AWWA)

3. Tees, Crosses, Reducers
a. Quantity
b. Nominal diameters
c. Material
d. Type of joint (e.g., R.G.)
e. Type (e.g., fire hydrant)
f. Specification (e.g., AWWA)

4. Bends
a. Quantity
b. Nominal diameter
c. Deflection angle
d. Material
e. Type of joint (e.g., R.G.)
f. Specification (e.g., AWWA)

5. Tapping Sleeves
a. Quantity
b. Nominal diameters
c. Pressure rating
d. Material
*e. Type and/or make (i.e., manufacturer)

6. Blind Flanges
a. Quantity
b. Nominal diameter
c. Pressure rating
d. Material

7. Mechanical Couplings
a. Quantity
b. Nominal diameter
c. Material
d. Type (e.g., transition)
*e. Manufacturer
*f. Style (e.g., 441)

8. Plugs, Bell Caps, Flg./Bell Adaptors, Sleeves, Adapters
   a. Quantity
   b. Nominal diameter
   c. Material
   d. Type of joint (e.g., R.G.)
   e. Specification (e.g., AWWA)

9. Fire Hydrants
   a. Quantity
   b. Type (e.g., double)
   c. Size of outlet(s)
   *d. Make (Manufacturer)

C. STEEL FITTINGS

1. Elbows
   a. Quantity
   b. Nominal diameter
   c. Deflection angle
   d. Type of radius (e.g., short, long)
   e. Material
   f. Thickness of pipe wall for 16-inch and larger diameter

2. Tees, Crosses
   a. Quantity
   b. Nominal diameters
   c. Material
   d. Thickness of pipe wall for 16-inch and larger diameter

3. Reducers
   a. Quantity
   b. Nominal diameters
   c. Material
   d. Type (e.g., plug, taper)
   e. Thickness of pipe wall for 16-inch and larger diameter

4. Flanges
   a. Quantity
   b. Nominal diameter
   c. Pressure rating
   d. Material
   e. Type (e.g., weld neck)

5. Mechanical Couplings
   a. Quantity
   b. Nominal diameter

c. Type (e.g., insulating)
*d. Manufacturer
*e. Style (e.g., 411)

6. Butt Straps
a. Quantity
b. Inside diameter
c. Width of strap
d. Thickness of strap wall
e. Material

7. Filler Rings
a. Quantity
b. Outside diameter
c. Width of ring
d. Thickness of wall
e. Material

8. Bulkheads/Dished Heads/Caps
a. Quantity
b. Nominal diameter
c. Material
d. Thickness of wall if over 16-inch diameter

9. Fire Hydrants
a. Quantity
b. Size of Outlet(s)
c. Type (e.g., single built-up)
*d. Make (e.g., angle valve manufacturer)

D. JOINT RESTRAINTS

1. Lock-Joint Gaskets
a. Location (use symbol "Δ")
*b. Make (i.e., manufacturer)

2. Yokes & Rods
a. Location (identified on "field notes" drawing as "Y&R")

3. Anchor Box Assemblies
a. Quantity
b. Number of rods
c. Diameter of rods

4. Thrust Blocks
a. Location (use symbol "⊗")

5. Key Blocks
   a. Location (use symbol "▭")
   b. Physical dimensions
   c. Rod size, length, quantity
   d. Yoke type and location

E. MAIN PROTECTION

1. Corrosion Mitigation
   a. Polyethylene Encasement
      i. Thickness
      ii. Color (e.g., black)
      iii. Type (e.g., tube)

   b. Cathodic Protection
      i. Number of anodes
      ii. Number of test stations
      iii. Location of test stations
      iv. Schematic diagram

   c. Insulating Flanges
      i. Quantity
      ii. Nominal diameter
      iii. Type (e.g., steel spigot to steel spigot, steel spigot to D.I. AWWA R.G. bell)

2. Other
   a. Blow-off Assemblies
      i. Quantity
      ii. Size
      iii. Lateral Material (e.g., copper)
      iv. Location

   b. Vacuum Relief Assemblies
      i. Quantity
      ii. Lateral Material (e.g., steel)
      iii. Size
      iv. Location

   c. Air Valves
      i. Quantity
      ii. Lateral Material (e.g., copper)
      iii. Size
      iv. Location

   d. Thimbles
      i. Quantity
      ii. Location
      iii. Physical dimensions
      iv. Material
      v. Grout material (e.g., concrete, slurry)

e. Concrete Encasement, Cradle, and Slab
   i. Location
   ii. Physical dimensions
   iii. Reinforcement detail

F. MISCELLANEOUS

1. Notes
   *a. Installation problems
   *b. Material acquisition problems
   *c. Testing and chlorination problems
   *d. Miscellaneous

2. Title Block
   a. Bedding and backfill material (e.g., native soil, sand slurry)
   b. Type of soil surrounding trench (i.e., sand, loam, clay (adobe), dec. granite, shale, rock, filled ground)
   c. Date installation was completed
   d. Name of the Inspector
   e. Name of the Contractor

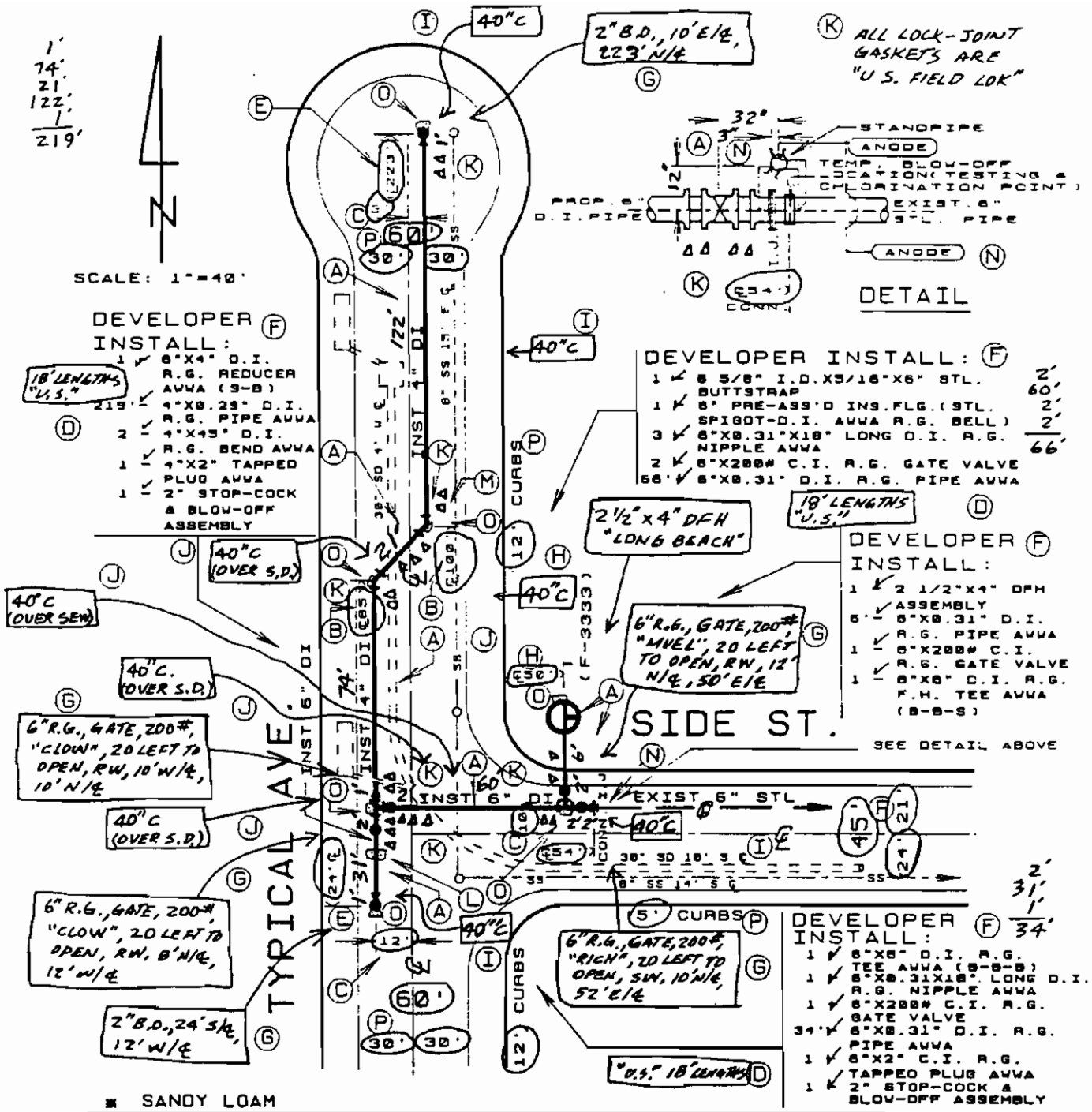

FIGURE 4

SAMPLE "FIELD NOTES" DRAWING FOR THE AREA NORTH OF MULHOLLAND DRIVE

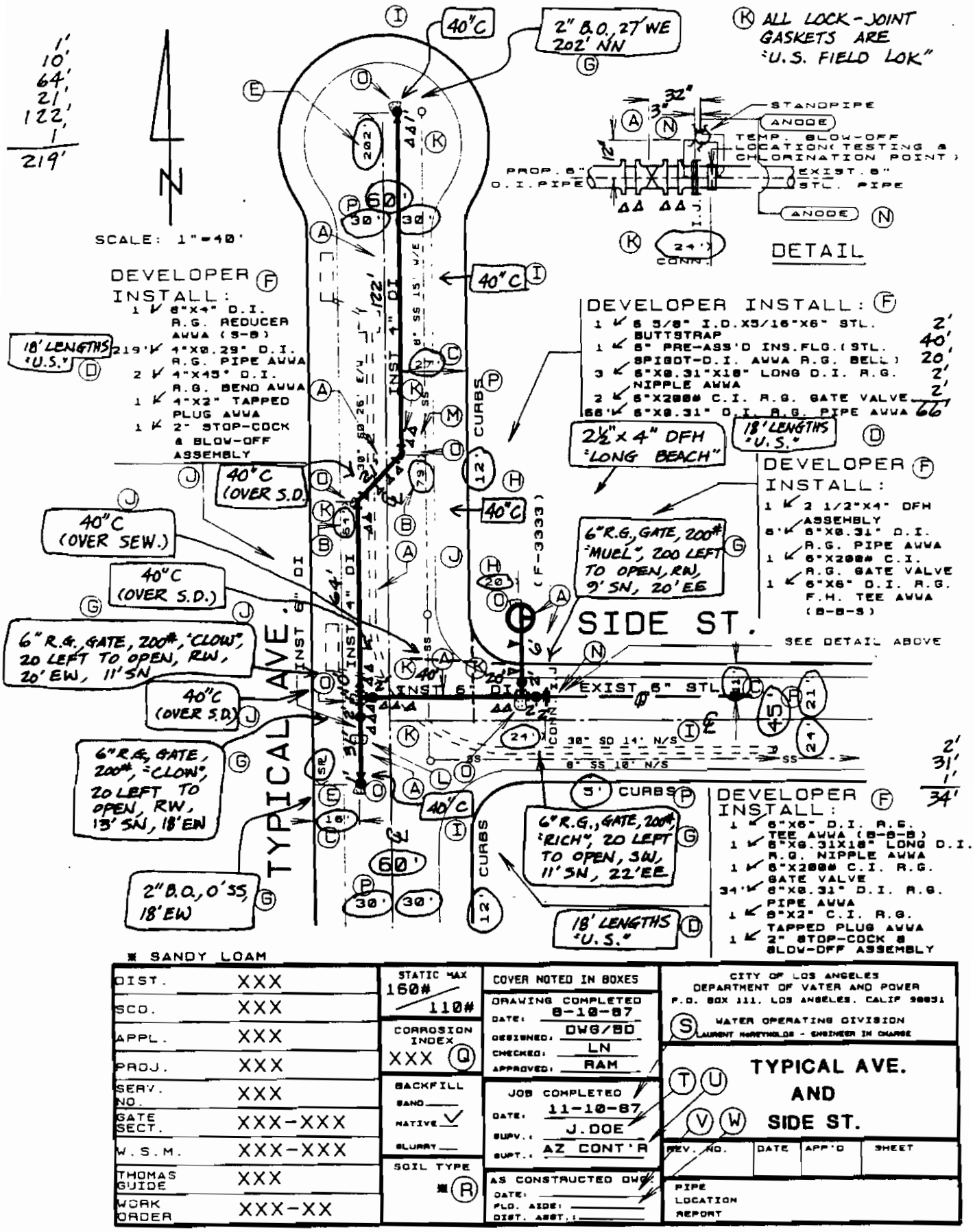

FIGURE 5
SAMPLE "FIELD NOTES" DRAWING
FOR THE AREA SOUTH OF MULHOLLAND DRIVE

SAMPLE "FIELD NOTES" DRAWING LEGEND

Item	Explanation
A.	Measure between fittings.
B.	Locate all angle points.
C.	Verify main location.
D.	Indicate manufacturer and manufactured pipe length.
E.	Locate pipe ends and blow-offs.
F.	Verify material lists, correct if necessary.
G.	Locate and describe each valve (nominal diameter, pressure rating, material, joint type, type, make, number of turns and direction to open, and disk surface type).
H.	Locate and describe each fire hydrant (outlet size, type, and make).
I.	Indicate cover (per Section 1.03 B).
J.	Show cover of main and clearance between main and exposed substructures where they cross.
K.	Indicate make, size and show where field lock gaskets are used (△).
L.	Show where key blocks are used ( ).
M.	Label all angles in degrees and indicate if vertical (V.) or horizontal (H.), also indicate if angle is fabricated (FAB.).
N.	Locate and show insulating joints (I.J.) and test stations, and show anodes.
O.	Show where thrust blocks are used ( ).
P.	Verify R/W width and parkway width.
Q.	Indicate the type of backfill used.
R.	Indicate the type of soil around the excavation (sand, loam, clay (adobe), decomposed granite, shale, or rock).
S.	Indicate the date the installation was completed.
T.	Indicate the name of the Inspector.
U.	Indicate the name of the Contractor.
V.	Indicate the date the "as-constructed" drawing was completed.
W.	Fill in "DSGN ENG" (Design Engineer).

CHAPTER 2

CREATING THE "AS-CONSTRUCTED" DRAWING

2.01 GENERAL

The final graphical construction record is made by the Design Engineer on the original mylar drawing, which when completed becomes the "as-constructed" drawing. This is a detailed and accurate account which will be relied upon in the future for operation and maintenance, other designs, and by other agencies.

2.02 TRANSFERRING FIELD NOTES TO THE "AS-CONSTRUCTED" DRAWING

The "as-constructed" drawing is created by transferring all information shown on the "field notes" drawing except items flagged by an asterick (*) in Section 1.04. Sample "as constructed" drawings for the areas north of Mulholland Drive and south of Mulholland Drive are shown on Figures 6 and 7, respectively.

2.03 DRAFTING SPACE MANAGEMENT

When the "as-constructed" drawing is being created, the information on the plans must be prioritized. The purpose of this drawing is to show what was done, not to overload the drawing with information that results in an unlegible drawing. If portions of the substructures or other items interfere with "as-constructed" data, then erase enough of the low priority information to allow for clarity. Add descriptive notes, if practical. Information can sometimes be so dense in one area of the drawing that material lists or other data need to be relocated, and in some cases expanded details added. The Department's Standard Abbreviations and Drafting Standards included in the Appendix Section of this Manual shall always be used when creating the "as-constructed" drawing.

2.04 DELIVERY OF FIELD NOTES AND THE "AS-CONSTRUCTED" DRAWING

Within two (2) weeks after completion of the Main Extension, the completed original "field notes" drawing, "as-constructed" drawing and any other construction-related data are to be submitted for review to the Engineer at the follow address:

Mr. Laurent McReynolds
Engineer in Charge
Water Operating Division
Department of Water and Power
111 North Hope Street
P.O. Box 111
Los Angeles, California 90051

Attention T. Okamura, Room 1449

A copy of the "field notes" drawing is to be provided to the appropriate Water Operating Division district office by the Inspection Group immediately after completion of the Main Extension.

The Developer's field representative, Design Engineer, and Developer should keep copies of the material submitted in case questions arise during their review. Remember, approval by the Department of this submittal is required for acceptance by the Department of the facilities installed.

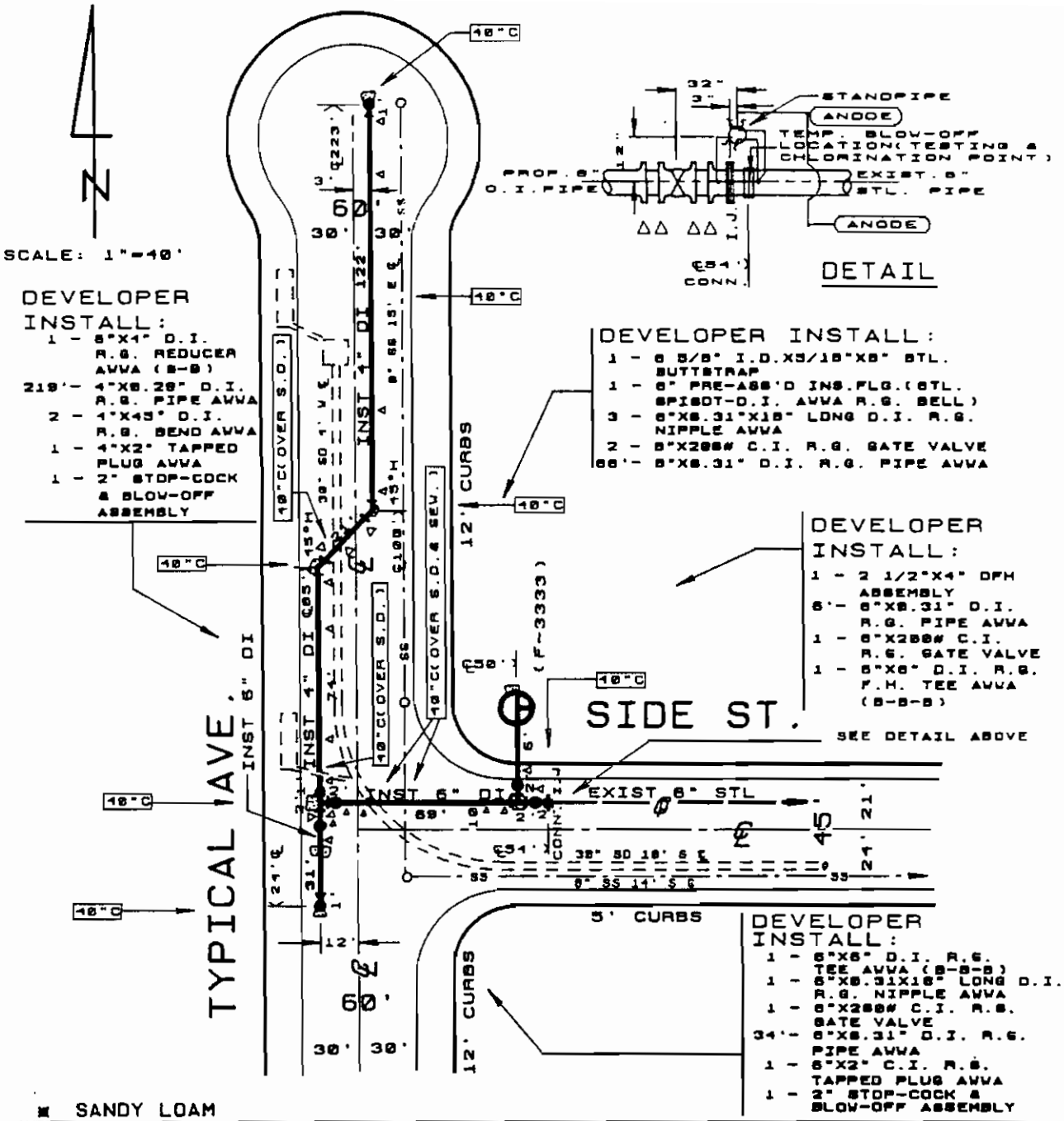

SANDY LOAM

DIST.	XXX	STATIC MAX 160# / 110#	COVER NOTED IN BOXES	CITY OF LOS ANGELES DEPARTMENT OF WATER AND POWER P.O. BOX 111, LOS ANGELES, CALIF. 90051 WATER OPERATING DIVISION LAURENT HUNTSWILDS - ENGINEER IN CHARGE
SCO.	XXX		DRAWING COMPLETED DATE: 8-10-87	
APPL.	XXX	CORROSION INDEX XXX	DESIGNED: DGW/BD CHECKED: LN APPROVED: RAM	TYPICAL AVE. AND SIDE ST.
PROJ.	XXX			
SERV. NO.	XXX	BACKFILL SAND___ NATIVE ✓ SLURRY___	JOB COMPLETED DATE: 11-10-87 SUPV.: J.DOE SUPT.: AZ CONT'R	
GATE SECT.	XXX-XXX			
W.S.M.	XXX-XXX			REV. NO. / DATE / APP'D / SHEET
THOMAS GUIDE	XXX	SOIL TYPE ■	AS CONSTRUCTED DWG. DATE: 11-18-87 FLD. AIDE: DSBN. ENG. DIST. ASST.:	PIPE LOCATION REPORT
WORK ORDER	XXX-XX			

FIGURE 6

SAMPLE "AS-CONSTRUCTED" DRAWING FOR THE AREA NORTH OF MULHOLLAND DRIVE

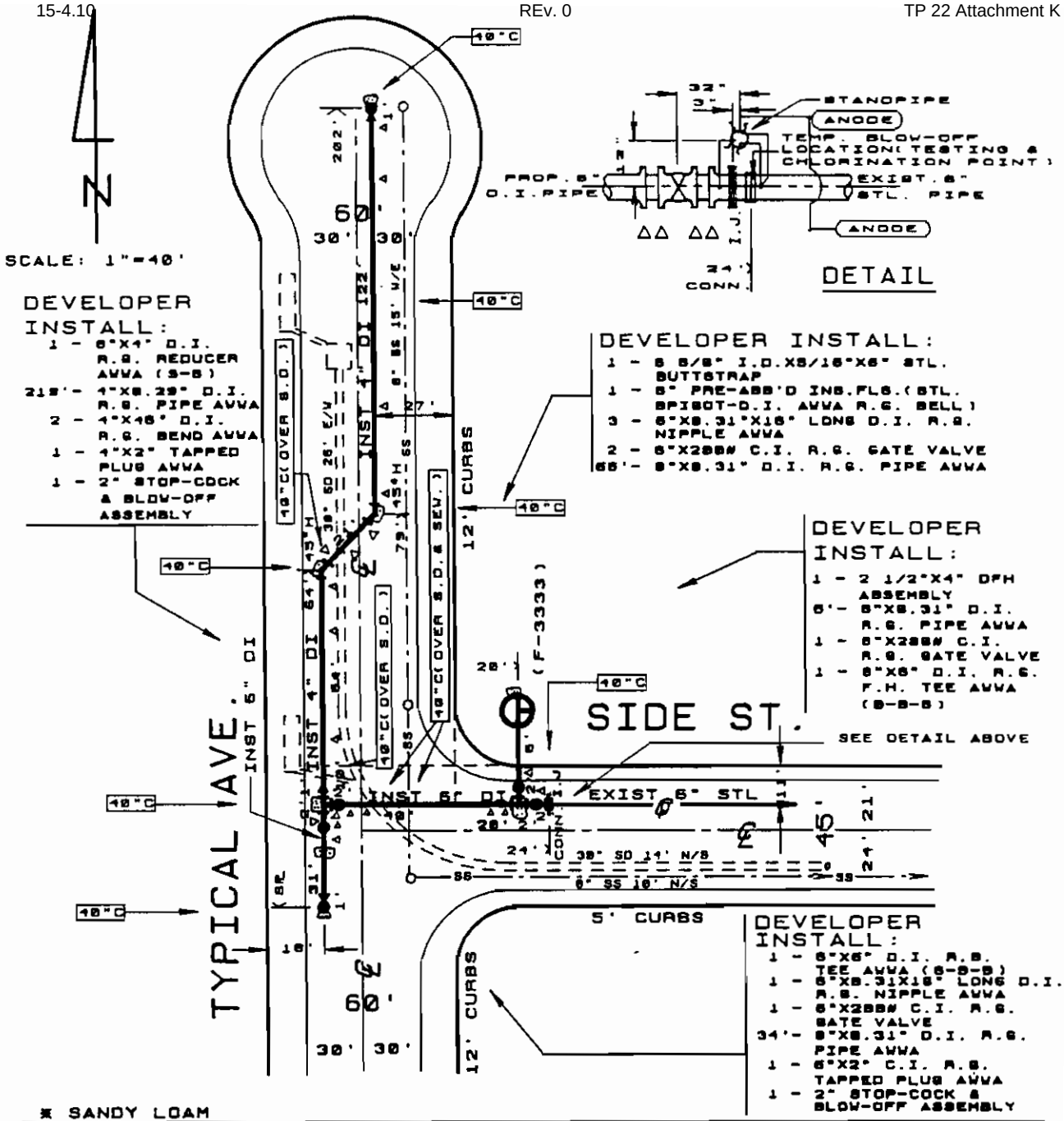

* SANDY LOAM

DIST.	XXX	STATIC MAX 160# / 110#	COVER NOTED IN BOXES	CITY OF LOS ANGELES DEPARTMENT OF WATER AND POWER P.O. BOX 111, LOS ANGELES, CALIF. 90051 WATER OPERATING DIVISION LAURENT HUNTWALDS - ENGINEER IN CHARGE
SCO.	XXX		DRAWING COMPLETED DATE: 8-10-87 DESIGNED: DGW/BD CHECKED: LN APPROVED: RAM	
APPL.	XXX	CORROSION INDEX XXX		TYPICAL AVE. AND SIDE ST.
PROJ.	XXX			
SERV. NO.	XXX	BACKFILL SAND ___ NATIVE ✓ SLURRY ___	JOB COMPLETED DATE: 11-10-87 SUPV.: J.DOE SUPV.: AZ CONT'R	
GATE SECT.	XXX-XXX			REV. NO. / DATE / APP'D / SHEET
W.S.M.	XXX-XXX			
THOMAS GUIDE	XXX	SOIL TYPE *	AS CONSTRUCTED DWG. DATE: 11-18-87 FLD. AIDE: DRGN. ENG. DIST. ASST.: ___	PIPE LOCATION REPORT
WORK ORDER	XXX-XX			

FIGURE 7

SAMPLE "AS-CONSTRUCTED" DRAWING FOR THE AREA SOUTH OF MULHOLLAND DRIVE

APPENDIX

EXHIBIT 1

(DWPWS LINESTYLE STANDARD)

(VERSA CAD)

	PEN POSITION	RAPIDOGRAPH	lineWidth	lineStyle	Color on Screen
PROP Water System	3	1	3	1	4
EXIST Water System	3	1	1	3	12
TO BE ABANDONED Water Main	2	0	3	3	5
Metropolitan Water District(MWD)	3	1	1	3	12
Property line	3	1	2	13	2
EASEMENT Line	2	1	2	20	3
FORMER Property line	1	00	1	14	8
Centerline Street	1	00	1	17	8
Curb Line	1	00	1	15	9
FORMER Curb line	1	00	1	16	8
Sewer (S.S.)	1	00	1	4	14
Southern California Gas(SCG) Southern Counties Gas(SCoG)	1	00	1	5	14
DWP Power System(DWPPS) Southern California Edison(SCE)	1	00	1	6	14
Pacific Telephone & Telegraph(PTT) Western Union(WUT)	1	00	1	9	14
Electrolier Lighting Conduit(L)	1	00	1	7	14
Temp Lines(all line types)	1	00	1	8	14
Traffic Signal Conduit(TS) Police & Fire Alarm Conduit(FA)	1	00	1	10	14
Oil or Gasoline Pipe lines (OIL),(GASOLINE)	1	00	1	11	14
Storm Drain(SD)	1	00	1	12	14
Storm Drain (or other Subs) With Dia.>= 36"	1	00	1	12	14
Misc. Substructures (Use appropriate label)	1	00	1	18	14

STANDARD DRAFTING SYMBOLS

NO.	DATE	INTL	REVISIONS	APPD

DEPARTMENT OF WATER AND POWER
WATER SYSTEM CITY OF LOS ANGELES

		DATE	APPROVED
DRWN	C.JOLLEY	7 OCT 87	
DESGN	C.JOLLEY	7 OCT 87	
CHKED			

FIRE HYDRANTS, WATER MAINS, ETC.

ITEM		SYMBOL
1	$2\frac{1}{2}$" SINGLE BUILT-UP	
2	4" SINGLE BUILT-UP	
3	$2\frac{1}{2}$" SINGLE OUTLET	
4	4" SINGLE OUTLET	
5	$2\frac{1}{2}$" x 4" DOUBLE OUTLET	
6	4" x 4" DOUBLE OUTLET	
7	ANY F.H. BELOW SURFACE	BS.
8	RICKS, 1-4" OUTLET, 2-$2\frac{1}{2}$" OUTLETS	R
9	DEPT. $2\frac{1}{2}$" SFH OR $2\frac{1}{2}$" ANGLE VALVE	
10	DEPT. 4" SFH OR 4" ANGLE VALVE	
11	FIRE HYDRANT LATERAL N.T. = NO TOP	N.T.
12	THIMBLE OR CONC. ENCASED	16" STL. Thimble; 220; 0.10"; 174
13	CRADLE OR SLAB	CONC. SLAB; 268; 343; 0.24; 148; 0.10"; 73; CONC. CRADLE
14	CONDUIT AND TUNNEL	CONDUIT; 0.08"; TUNNEL; 0.08"

STANDARD DRAFTING SYMBOLS (CONT'D)

NO.	DATE	INITIALS	REVISIONS DESCRIPTION	APP'V'D

DEPARTMENT OF WATER AND POWER
WATER SYSTEM — CITY OF LOS ANGELES

	NAME	DATE
DESIGNED	T.A. LUGO / L.N.	12/86
DRAWN	E.K.N.	12/86
CHECKED	[illegible]	12/86

APPROVED

GATES AND FITTINGS

SIZE OF SYMBOLS

LINE GATES OPEN – SHUT

LINE GATE, BY PASS, & REDUCER

SEASONAL OPERATIONAL GATE OPEN – SHUT

SERVICE GATE – BLOW OFF GATE

AIR VALVE – AUTOMATIC VACUUM VALVE

REDUCERS SINGLE – DOUBLE

ROTO, PLUG, GLOBE, CONE, BALL & SPHERICAL VALVES OPEN – SHUT

BUTTERFLY VALVE – ALTITUDE VALVE

CHECK VALVE – CLAPPER REMOVED

REGULATOR – RELIEF VALVE

PRESSURE RECORDER

OUTLET – PASS HOLE

MAN HOLE – AIR VALVE ON MAIN HOLE (ACCESS HOLE INTO MAIN)

VENTURI METER – PITOT TUBE

SPARLING, ORIFICE, & FLOW METERS

SLIDE, LIFT OR SLUICE GATE

TEE – CROSS

CLAMP – DOUBLE CLAMP

HORIZONTAL BEND – OFFSET

VERTICAL BEND – OFFSET

WELDED CONNECTIONS – WELDED TEE

MECH. COUPLING (NON-INS.) – MECH. COUPLING (INS.)
CATHODIC PROTECTION – INS. FLANGE JOINT

MAINS NOT CONNECTED

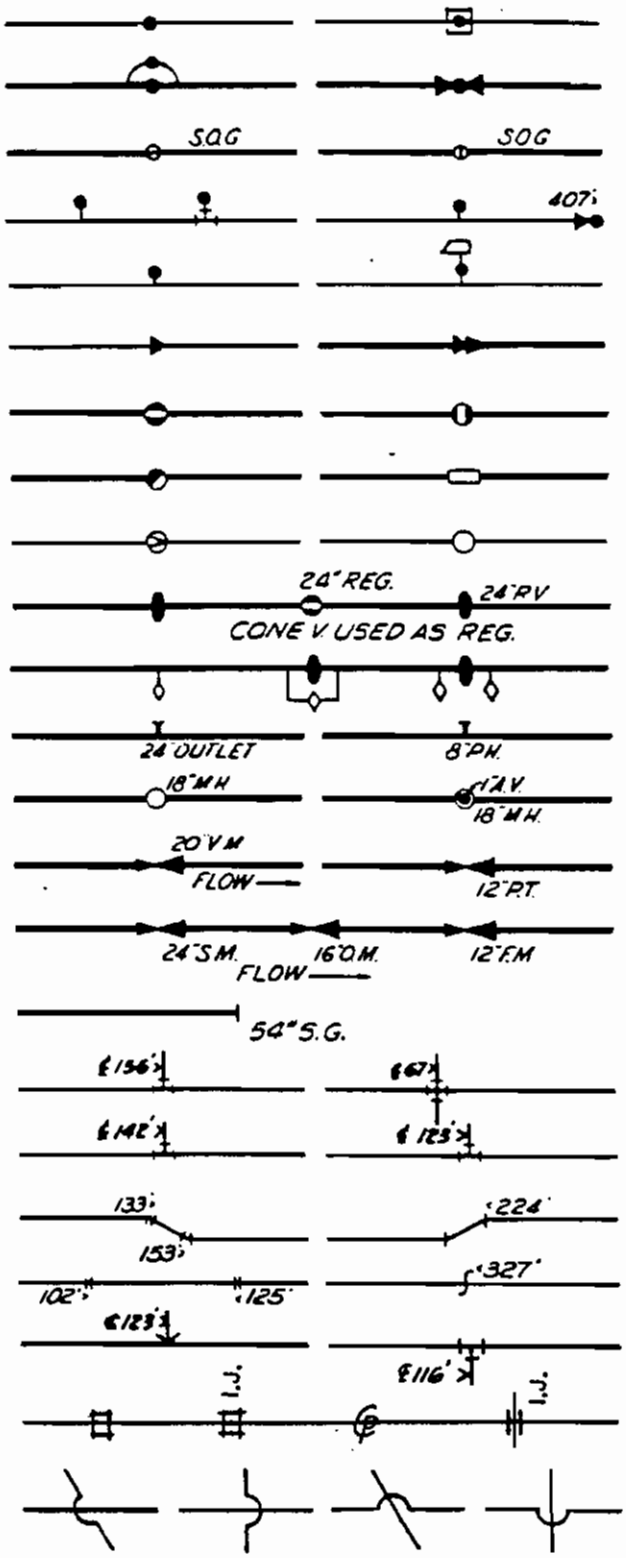

STANDARD DRAFTING SYMBOLS (CONT'D)

NO.	DATE	INIT'LS.	REVISIONS DESCRIPTION	APP'V'D

DEPARTMENT OF WATER AND POWER
WATER SYSTEM — CITY OF LOS ANGELES

	NAME	DATE	APPROVED
DESIGNED	J.A. POHL/L.N.	12-86	
DRAWN	E.K.N.	12-86	
CHECKED	[illegible]	12-[illegible]	

EXHIBIT 2
STANDARD ABBREVIATIONS

ABBREVIATIONS FOR GATE VALVES

AMERICAN	AM
AMERICAN CAR FOUNDRY	A.C.F.
AMERICAN DARLING	A.D.
ANNISTON	ANN.
ARMCO	ARM.
BELL	BELL
BLUELINE	BLUE
BOYNTON	BOY.
BURTON	BURT.
CHAPMAN	CHAP.
CLOW	CLOW
COFFIN	COFF.
CRANE	C.
DARLING	DAR.
DAVIS	DAVIS
DRESSER	DRS.
EDDY	EDDY
FAIRBANKS MORSE	FAIR.
HOWELL BUNGER	H.B.
IOWA	IOWA
JAMES JONES	JONES
JENKINS	JEN.
KELLY	KEL.
KELLY JONES	K.J.
KENNEDY	KEN.
LARNER JOHNSON	L.J.
LONG BEACH IRON WORKS	L.B.
LUDLOW	LUD.
LUNKENHEIMER	LUN.
MALLEABLE & ILLINOIS	M&I
McNAB & HARLIN	M&H
McWANE	MH
METROPOLITAN	METR.
MICHIGAN	MICH.
MUELLER	MUEL.
NATIONAL TUBE	N.T.
NELSON	NEL.
NIBCO-SCOTT	N.S.
NIELS AAGE KJAER	A.V.K.
NORDSTROM	NORD.
NORTHERN INDIANA BRASS CO.	N.I.B.
OHIO INJECTOR	O.I.
PACIFIC STATES	PAC.
PACIFIC VALVE	P.V.
PEET	PEET
PITTSBURGH	PITT.
POWELL	POW
PRATT & CADY	P&C
RENSSELAER	REN.
RICH	RICH
SCOTT	SCOT.
SIMPLEX	SIMP.
SMITH	SMITH
A. P. SMITH	A.P.S.
S. MORGAN SMITH	S.M.S.
STOCKHAM	STK.
TROY	TROY
UNITED BRASS WORKS	U.B.W.
UNITED CASTING	U.C.
U.S. PIPE	U.S.P.
VELAN	VEL.
WALWORTH	WAL.
WASHINGTON	WASH.
WESTERN TUBE	WEST.
WOOD	WOOD

ABBREVIATIONS FOR CONTROL VALVES

ALLIS-CHALMERS	A.C.
BAILEY	BAIL.
BAKER	BAK.
B.M.S. COMPANY	BMS
BOVING	BOV.
BUILDERS IRON FOUNDRY	B.I.F.
BUILDERS PROVIDENCE	B.P.
CLAYTON	CLAY
DAVIS	DAVIS
DOMINION	DOM.
DRESSER	DRS.
DURCO	DURCO.
EVEREST	EVER
GOLDEN ANDERSON	G.A.
GRINNELL	G.R.N.
HART	HART
HENDY	HEN.
HENRY PRATT	PRT.
HERSEY	HER.
INTER-AMERICAN ENGR. CORP.	I.A.C.
JAMESBURY	J.B.
KEYSTONE	KEY.
KUBOTA	KUB.
LUNKENHEIMER	LUN.
McNALLY-PITTSBURGH	M.P.
MUELLER	MUEL.
NEWCO	NEWCO
OIL CAPITOL VALVE CO.	O.C.V
PELTON	PEL.
POSI-SEAL	POSI.
PRODUCTION CONTROL	PRDCN
ROCKWELL	ROCK.
RODNEY HUNT	HUNT.
ROSS	ROSS
RYAN-SULLIVAN	R.S.
S. MORGAN SMITH	S.M.S.
VALVE & PRIMER	V&P
WILGUS	WIL.
WILLAMETTE	WLT.
YUBA	YUBA

Rev. 12-8

STANDARD ABBREVIATIONS (CONT'D)

ABBREVIATIONS FOR PIPE

CAST IRON	
CAST IRON—LEAD OR CEM. JOINT	NO SYMBOL
CAST IRON—	
RUBBER GASKET JOINT (TYTON)	R.G. (TY.)
DUCTILE IRON	D.I. or DUA.
	MONO
COPPER TUBING	COP. (CU.)
COMPOSITE	
ASBESTOS CEMENT (TRANSITE)	A.C. (TR.)
CONCRETE	CONC.
MODIFIED PRESTRESSED CONC. CYL.	M.P.C.C.
PRESTRESSED CONCRETE CYLINDER	P.C.C.
REINFORCED CONCRETE	R.C.
REINFORCED CONCRETE CYLINDER	R.C.C.
CEMENT MORTAR	C.M.
STEEL	
MANNESMAN	MANN.
MATHESON	MATH.(M)
OUTSIDE DIAMETER CASING	O.D.
RIVETED	RIV.(R)
STANDARD SCREW	STD. (S)
WELDED—VICTAULIC COUP.	VICT.
WELDED — CAULKED JOINT	W.C.J.
WELDED — RUBBER JOINT	W.R.J.
WELDED — WELDED JOINT	W.W.J.
(IN SOME OLDER ENTRIES, W.S. & STL. WERE USED WITHOUT REFERENCE TO TYPE OF JOINT.)	
PLASTIC	
POLY VINYL CHLORIDE	P.V.C.

ABBREVIATIONS FOR GATE VALVE SURFACES

SOLID WEDGE (ALL METAL)	S.W.
RESILIENT WEDGE	R.W.
DOUBLE DISC	D.D.

MISC. ABBREVIATIONS

AIR VALVE	A.V.
ALEMITE FITTINGS	ALE.
BLOW OFF	B.O.
BRONZE DISK	B.D.
CADMIUM PLATED	CAD.
CORPORATION COCK	C.C.
FEEDER GATE VALVE	FEEDER
FIRE HYDRANT GATE VALVE	ON F.H.
LUBRICATED GATE VALVE	LUB.
SERVICE GATE VALVE	SER. H.
SHUT VALVE	SHUT
SPINDLE	SPD.
SQUARE BOTTOM	SQ. BOT.
STEM LOCATION	STEM LOC.
STOP COCK	S.C.

EXHIBIT 3

READING SURVEY MARKERS AND MEASURING FROM SURVEY POINTS

The survey marker (stake, lath, or information painted on pavement) presents all the data relevant to its adjacent survey point (wood hub, or spike and tin). Survey measurements on the marker are generally marked to hundredths of a foot (not inches).

Markers will indicate wheather an existing grade is to be cut ("C") or filled ("F"). For example: "C-1.10 TC" means that the top of the proposed curb will be one and one-tenth feet below the top of the survey point; "F-1.25 TC" means that the top of the curb be one and twenty-five hundredths feet above the survey point.

The depth measurement of a pipe (cover) may be obtained by measuring the distance along an imaginary vertical line, from the top of the pipe, to the point where it crosses the horizontal plane having the same elevation as the survey point or a more convenient height above or below it. This measurement is then adjusted to obtain the true cover. For example, a stake reading "C-1.41 TC" has a survey point obscured by a nearby pile of dirt; a target is conveniently set 1.59 feet above the survey point (for a total cut of 3.00 feet to the top of curb); if the vertical distance from the target to the top of the pipe is measured as 6.50 feet, then the true cover to top of curb is: 6.50' - 3.00' = 3.50' = 42" (42" TC). The same true cover can be obtained from an adjacent stake that reads "F-1.06 TC"; a target of say 2.06 feet is set above the survey point, if the vertical distance from the target to the top of pipe is measured as 4.50 feet, then the true cover to top of curb is: 4.50' - 2.06' + 1.06' = 3.50' = 42" (42" TC).

Marker stakes usually have the survey station (the horizontal distance in feet from a selected "zero" point) and the survey point elevation (above or below sea level) marked on the far side.

Survey points are often set by surveyors along a line that is horizontally off-set away from the true line being surveyed, such as five feet (5') back of curb face. Surveyors usually mark this on the upperfront face of the marker stake as:

5'	or	5'
CF		O/S

Note that the survey stations marked on offset stakes along curves show the station numbers that apply to the original survey line location.

The Developer's surveyor should supply a Grade Sheet showing data related to each survey point in tabular form to both, the Inspector and the Developer's field representative.

GLOSSARY

AIR VALVE: (AV) A generally 3/4", 1", 1½", or 2" manually-operated valve connected by a riser-pipe to the top of a water pipeline for the purpose of releasing air. This valve is usually installed at isolated high points in the pipeline, at the crest of hills, and near the downhill side of main gate valves. Only the operable valve is measured if it is located directly above the tap valve. The operable valve and the tap valve are measured (the same way gates are measured) if the operable valve is horizontally distant from the tap valve.

AUTOMATIC AIR VALVE: (AV) A generally 1", 1½", 2", 4", 6", 8", or 12" float valve that automatically releases air (see above), and also admits air when needed to prevent vacuum-caused collapse of large steel mains. Also called Automatic Air and Vacuum Valve. The tap valve is always measured and the auto valve measured only when installed underground. Measurements are made similar to gates.

BEGINNING OF CURVE: (B.C.) See "End of Curve".

BERM: A raised rolled edge on an asphalt-paved street. May also be constructed of concrete with a similar "wave" profile.

BLOW-OFF: A valve with a riser-pipe used to flush a main. This valve is most often installed at the end of a dead-end main. On large diameter mains, blow-offs are installed at isolated low points, and near the up-hill side of main gate valves, as needed. They are normally tapped on or near the bottom of large mains. The operable valve and tap valve, if present are measured similar to gates. See "Stem Horizontal".

CENTERLINE OF STREET: A survey control line usually located along the true center of a street (one-half the distance between property lines) but sometimes located closer to one side of a street (due to subsequent street widening on only one side).

CONNECTION: 1: The group of pipe fittings installed to join a Main Extension to the Distribution System. 2: the specific point where the new fittings join the existing pipe.

COVER: See "Vertical Measurements" in Section 1.03b.

CROSS STREET MEASUREMENT: The term commonly used to designate the "longitudinal" measurement to the nearest crossing street or right-of-way property line, centerline, or curb.

CURB: The key word used to indicate curb width, (sometimes called "parkway"). The distance in feet from the property line to the nearest curb face.

CURB FACE: The exposed nearly vertical side of a curb, from which, at the flow-line of the gutter, a gate's "curb" measurement is taken.

DISTRIBUTION SYSTEM: Mains, together with all appurtenant and necessary valves, fire hydrants, meters, service laterals, and associated material and equipment which carry potable water and distribute it to individual customers.

DRY-CONNECTION: A connection where a shut gate valve prevents a proposed Main Extension from being supplied by the Distribution System.

DRY-TAP: An outlet hole made on a water pipe while the pipe is not under internal water pressure.

ELEVATION: The height of a point, expressed in feet above or below ("minus") sea level.

END OF CURVE: (E.C.) The survey point marking the joining point of the end of an arc to a tangent line, or to the end of a straight line. A curve beginning at a lesser station number is designated "B.C." (Beginning of Curve), and the next subsequent end of curve at a greater station number is designated "E.C.".

FACE: (Of a survey marker) The flat side that faces toward the center of the work area, and also faces its companion survey point.

FLOW LINE: (F.L.) The bottom of the inside diameter of a pipe, or the lowest section that carries the water in an open channel.

GRADE STAKES: A general term for both lath and marker (survey information stakes driven partially into the ground).

HUB: The short survey stake driven flush into the ground. It has a tack on top to indicate the exact survey point.

LATERAL MEASUREMENT: The measurement from the main street.

LONGITUDINAL MEASUREMENT: The measurement from the cross street.

MAIN: Water distribution pipe, excluding fire hydrant and service laterals.

MAIN EXTENSION: An extension to the Distribution System.

MAIN STREET MEASUREMENT: The term commonly used to designate the "lateral" measurement to the nearest parallel street or right-of-way property line, centerline, or curb.

MANHOLE: 1: A flanged opening in a large pipeline or tank used for worker's access to the interior. 2: A large standpipe. 3: A sewer manhole. 4: A manhole cover.

NIPPLE: A piece of pipe not having a bell end. Note: The standard ductile iron nipple length is 18 inches.

NOT UP: The term used to describe a valve that is intentionally buried and inaccessible.

PARKWAY: See "Curb".

POINT OF COMPOUND CURVE (PCC): The survey point marking the joining point of two different arcs usually having a common radius line but with different radius lengths, with the radius point of the smaller arc lying within the larger arc. It is generally used along street center, property, and curb lines, and centerline of large steel pipe.

POINT OF REVERSE CURVE (PRC): The survey point marking the joining point of two different arcs that may be of identical radius length, usually having a common radius line, with the radius point of one arc lying outside of the other arc. It is generally used along street center, property, and curb lines, and centerline of large steel pipe.

PRODUCED (LINE): A straight or curved line that is extended beyond its normal terminus.

SADDLE: A curved steel reinforcing pad used to strengthen a steel main at a branch connection. Also called "doubler plate".

SCHEDULE (Of the pipe): A system of letters and numbers designating ductile iron and steel pipe according to wall thickness and strength; for example: "C-52" ductile iron pipe.

STANDPIPE: A piece of generally 6-inch diameter x 16 GA or 49-inch I.D. x 5/16-inch welded steel pipe set vertically in the ground to provide access to operate or repair gates, checkvalves, etc. It may also be fabricated from concrete pipe or reinforced concrete pipe.

STEM HORIZONTAL: The term used to describe a buried gate valve installed with the stem in a horizontal position instead of a vertical position. The operating nut location is recorded and "NOT UP-STEM HORIZ." noted on the "field notes" drawing.

STEM LOCATION: The term used to describe a gate valve installed at an angle. The location of the gate cap, (not the gate body nor the gate stem) is recorded on the "field notes" drawing. "Stem Location" also applies to large horizontal-type gate valves.

SUBS: Short term for substructures.

SUBSTRUCTURE: A man-made object that is located below the surface of the ground or pavement.

SURVEY HUB: See "Hub".

SURVEY STAKE: Marker or lath. See "Grade Stake".

SURVEY STATION: A specific point along a survey line that generally designates the horizontal distance in feet from a point of beginning designated as "Station 0+00".

WET-TAP: An outlet hole made on a water pipe while subjected to internal water pressure.

LOS ANGELES DEPARTMENT OF WATER AND POWER
WATER OPERATING DIVISION
REQUIREMENTS FOR 24 INCH AND SMALLER LINES

Comprising the following or portions thereof:

A1867 - WELD TEST SPECIMENS X A3821 WELDED SLIP JOINTS
A 9387 - PRE-ASSEMBLED STEEL INSULATING FLANGE
A 9407 - FUSION BONDED EPOXY COATING
230 - FIRE HYDRANTS
230 - FIRE HYDRANTS ADDENDUM
352 - GATE VALVES (4-12 INCH)
352 - GATE VALVES (4-12 INCH) ADDENDUM
GATE VALVES - DOES NOT APPLY TO 36 INCH VALVES
S-1025 - MECHANICAL TRANSITION COMPRESSION-TYPE COUPLINGS (2 -16 INCH)
S-1013 - MECHANICAL COUPLINGS (14 INCH AND LARGER)
S-1015 - MECHANICAL COUPLINGS (12 INCH AND SMALLER)
S-1027 - PACKAGED MAGNESIUM ANODES
S-1032 - FABRICATION OF INSULATING JOINT ASSEMBLIES
S-1040 - FABRICATION OF STEEL FLANGED NIPPLE ASSEMBLIES
276 - DUCTILE IRON PIPE
DUCTILE IRON PIPE ADDITIONAL
447 - STEEL PIPE
STEEL PIPE ADDITIONAL - DOES NOT APPLY TO 36 INCH PIPE

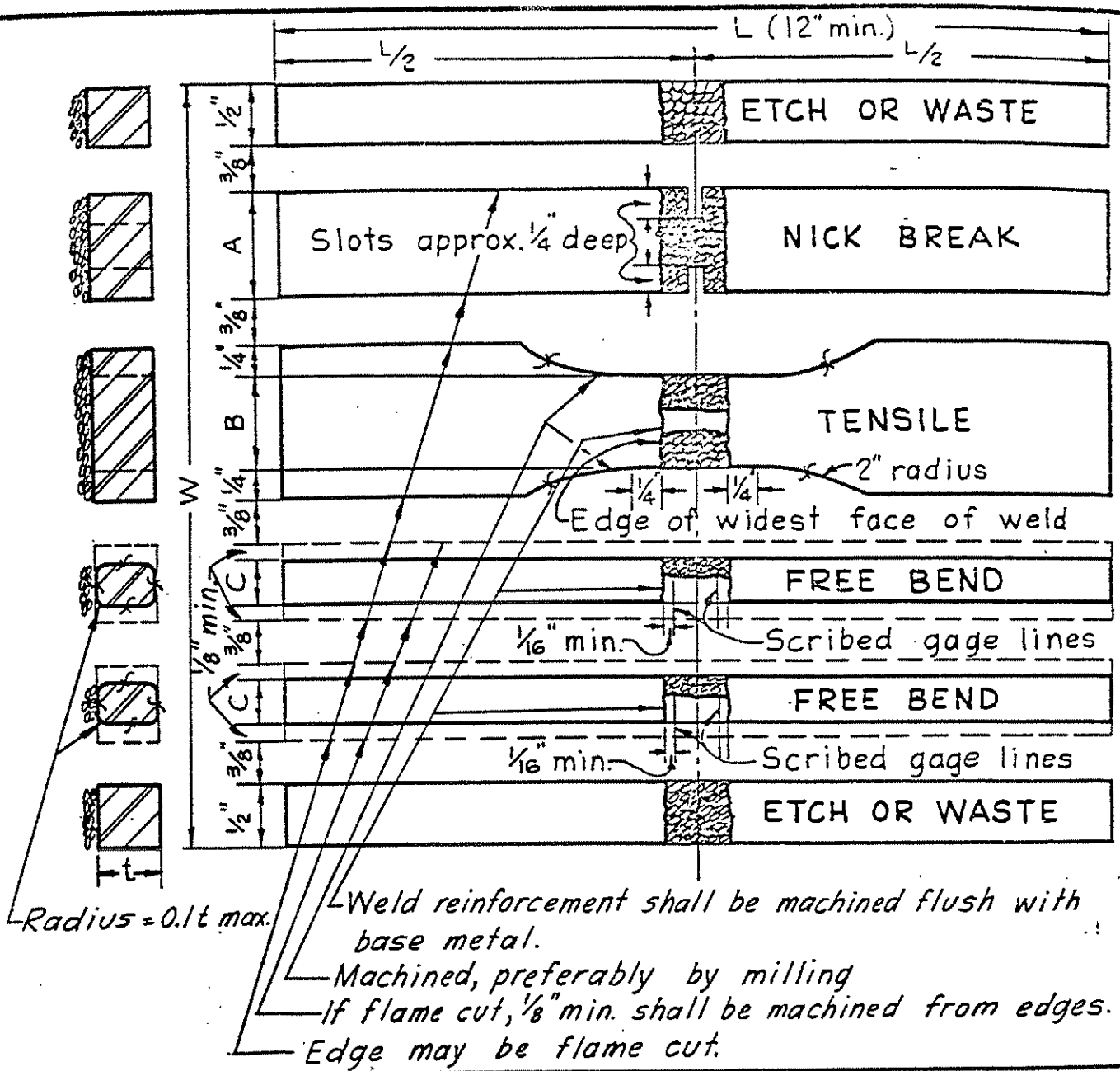

t inches	1/4"	5/16"	3/8	7/16	1/2	9/16	5/8	11/16	3/4	13/16	7/8	15/16	1	1 1/16	1 1/8	1 3/16	1 1/4
A "	7/8	31/32	1 1/16	1 7/32	1 1/4	1 11/32	1 7/16	1 17/32	1 5/8	1 23/32	1 13/16	1 29/32	2	2 3/32	2 3/16	2 9/32	2 3/8
B "	1 1/2	1 1/2	1 1/2	1 1/2	1 1/2	1 1/2	1 1/2	1 1/2	1 1/2	1 1/2	1 1/2	1 1/2	1 1/2	1	1	1	1
C "	3/8	15/32	9/16	21/32	3/4	27/32	15/16	1 1/32	1 1/8	1 7/32	1 5/16	1 13/32	1 1/2	1 19/32	1 11/16	1 25/32	1 7/8
L "	12	12	12	12	12	12	12	12	12	12	12	12	12	13 1/2	13 1/2	13 1/2	13 1/2
W "	7	7 9/32	7 9/16	7 29/32	8 1/8	8 13/32	8 11/16	8 31/32	9 1/4	9 17/32	9 13/16	10 3/32	10 3/8	10 5/32	10 1/2	10 23/32	11

(NOTE: FOR WELD TEST SPECIMENS LESS THAN 1/4" THICK SEE A-2082)

WELD TEST SPECIMENS - BUTT WELD PLATE 1/4-INCH TO 1 1/4-INCH THICK

0

A1867

NO.	DATE	IN'TL'S.	REVISIONS DESCRIPTION	APP'V'D
1	6-67	G.H.	Drawing of 3-24-55 Revised	E.S.

DEPARTMENT OF WATER AND POWER
WATER SYSTEM — CITY OF LOS ANGELES

	NAME	DATE	APPROVED
DESIGNED	H.A. PRICE	5-44	
DRAWN	G. HARRELL	3-67	
CHECKED	ABBETO	6-67	

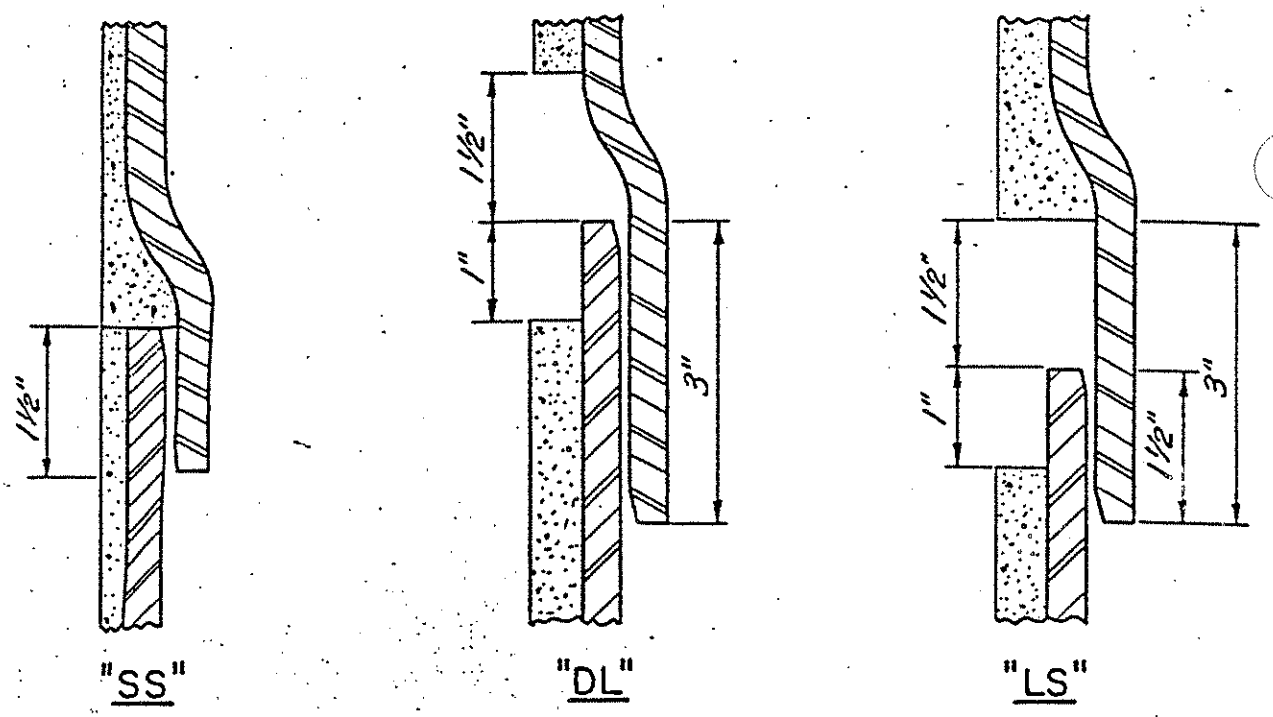

TYPICAL SLIP JOINTS

TYPE SS JOINT IS FOR PIPE SIZES UP TO AND INCLUDING 24 INCHES IN DIAMETER

TYPE LS JOINT IS FOR PIPE OVER 24 INCHES IN DIAMETER

TYPE DL JOINT, WHEN SPECIFIED, IS FOR EVERY TENTH LENGTH OF PIPE OVER 24 INCHES IN DIAMETER

NOTES

1. OUTSIDE EDGE OF PLAIN END AND INSIDE EDGE OF BELL SHALL BE SCARFED OR GROUND SLIGHTLY
2. LONGITUDINAL WELDS ON THE OUTSIDE OF THE PLAIN END AND THE INSIDE OF THE BELL SHALL BE GROUND TO PLATE THICKNESS FOR THE LENGTH OF THE LAP
3. INSIDE DIAMETER OF BELL SHALL BE BETWEEN 1/32 AND 1/16 OF AN INCH GREATER THAN OUTSIDE DIAMETER OF THE PLAIN END FOR THE LENGTH OF THE BELL
4. LENGTH OF BELL SHALL BE NOT LESS THAN 1-1/2" FOR TYPE SS
5. LENGTH OF BELL SHALL BE NOT LESS THAN 3" FOR TYPE LS AND TYPE DL

THIS DRAWING SUPERSEDES A 6765-8.

WELDED SLIP JOINTS

0

A 3082

NO.	DATE	IN'TL'S.	REVISIONS DESCRIPTION	APP'V'D

DEPARTMENT OF WATER AND POWER
WATER SYSTEM — CITY OF LOS ANGELES

	NAME	DATE	APPROVED
DESIGNED	J.S. G.R.H. O.N.D.	3/63	
DRAWN	W.I. LeBlanc	3/63	
CHECKED	J.S. & P.A.	3/63	

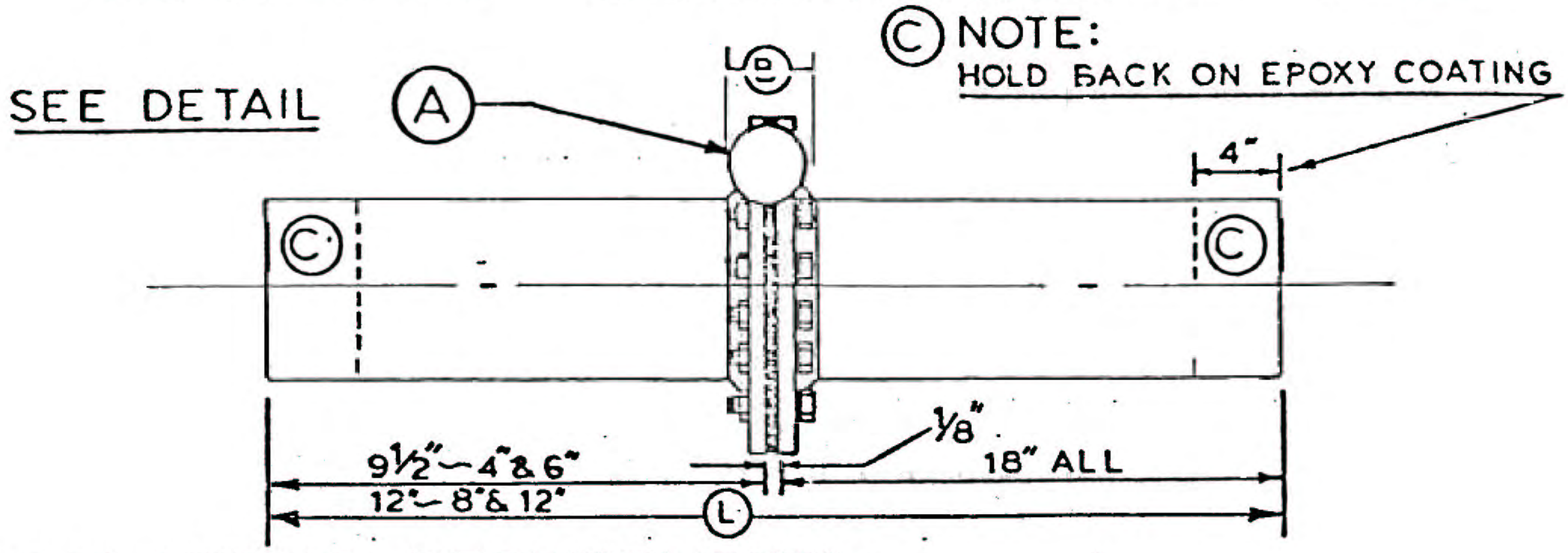

SANDBLASTING REQUIREMENTS:

1. INTERIOR SURFACES BEFORE EPOXY COATING.

COATING REQUIREMENTS:

A. EXTERIOR

1. ASPHALT ENAMEL PRIMER, OVER-ALL.
2. FIELD APPLIED ASPHALT ENAMEL, OVER-ALL.
3. FIELD MORTAR COATING ON MORTAR COATED PIPE.

B. INTERIOR

1. CEMENT LINING ON NIPPLES.
2. EPOXY COATING (KESITE # 740, OR EQUAL)

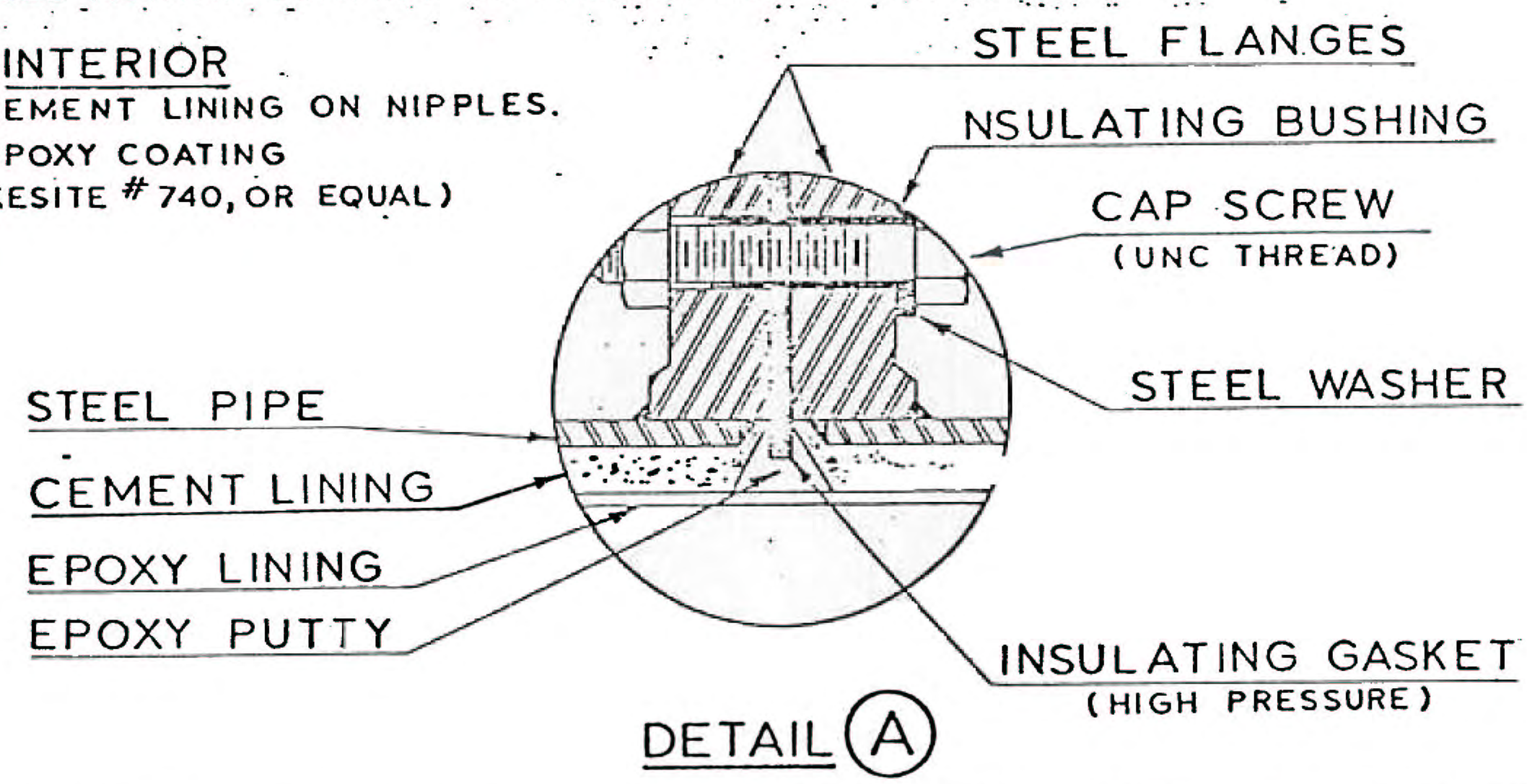

DETAIL (A)

DIMENSION DATA	(L)	(B)
2 – 4" 250 LB. WELD. NECK FLG.	27⅝"	8 – ¾" DIA. x 3½" C.S.
2 – 6" " " " " "	27⅝"	12 – ¾" DIA. x 4" C.S.
2 – 8" " " " " "	30⅛"	12 – ⅞" DIA. x 5½" C.S.
2 – 12" " " " " "	30⅛"	16 – 1⅛" DIA. x 5½" C.S.

PRE-ASSEMBLED STEEL INSULATING FLANGE

FABRICATION DETAILS

0

A9301

NO.	DATE	INITIALS	REVISIONS DESCRIPTION	APP'VD
	4-76	RDB	REV. BOLT LENGTH - ANSI FLG'S.	RJB
1	8-76	RDB	(L) DIM. LENGTHENED	RJB

DEPARTMENT OF WATER AND POWER
WATER SYSTEM — CITY OF LOS ANGELES

DESIGNED R. F. S. DATE 12-10-73

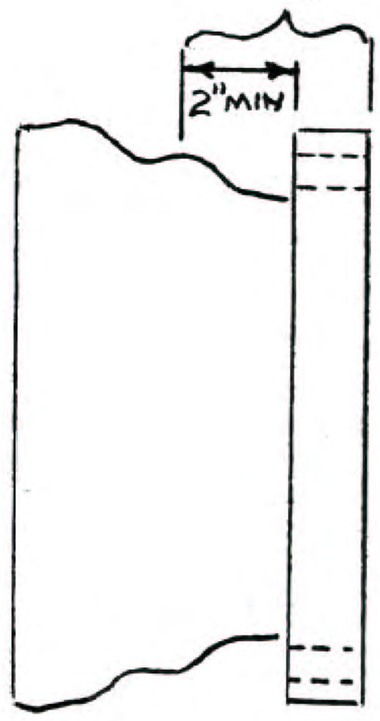

COAT INTERIOR & EXTERIOR OF FLANGE AREA, INCLUDING BOLT-HOLES, AND MINIMUM OF 2" ON THE EXTERIOR OF THE BELL SECTION FROM FLANGE INTERFACE .
COAT ALL OF BELL INTERIOR. △1

△3 CI & DI
FLANGE & BELL ADAPTORS
4",6",8",12",PIPE SIZE

△2 CI & DI △3
MACHINE BACKSIDE OF FLANGE

MINIMUM CLEAN-UP

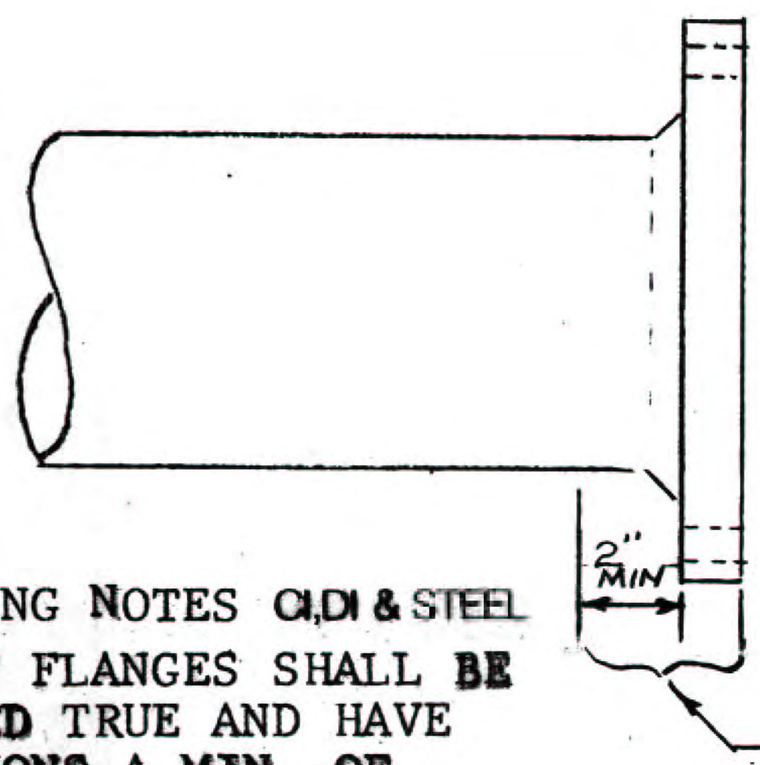

STEEL FLANGE & NIPPLE △3
IN
4",6",8", 12" PIPE SIZES

△1.△3
MACHINING NOTES CI,DI & STEEL
FACE OF FLANGES SHALL BE MACHINED TRUE AND HAVE SERRATIONS A MIN. OF 0.010-INCH DEEP AND 16 TO THE INCH
COUNTER SINK 3/32" THE BOLTHOLES ON BOTH SIDES OF THE FLANGE
BEVEL 1/8" THE OUTER, BACK AND INNER EDGES OF THE FLANGE
DEBURR SHARP EDGES OF INNER FLANGE WELD AND WELD SPLATTER

COAT INTEROR & EXTEROR OF FLANGE, INCLUDING BOLT-HOLES, AND 2" MINIMUM OF PIPE LENGTH (INSIDE AND OUTSIDE)
OVERSPRAY IS NOT CRITICAL

FUSION-BONDED EPOXY COATING

A9407

NO.	DATE	IN'TL'S.	REVISIONS DESCRIPTION	APP'V'D
1	9-85	RL	ADD INSTRUCTIONS	RL
2	3-87	RL	ADD INSTRUCTIONS	RL
3	9-87	RL	ADD DI & INSTRUCTIONS	RL

DEPARTMENT OF WATER AND POWER
WATER SYSTEM — CITY OF LOS ANGELES

	NAME	DATE	APPROVED
DESIGNED	CR		W. L. Knight
DRAWN			
CHECKED	RL	5-84	

K&E 10 7156 3-66• LA 1724

MAY 22 '84 NAA

PART F - DETAILED SPECIFICATIONS

DIVISION F2 - DETAILED REQUIREMENTS

1. General: Fire hydrants, assemblies and bury sections shall be in accordance with these detailed specifications.

2. Standards:

a. NSF/ANSI 61-2005/Addendum 1.0-2005, Drinking Water System Components - Health Effects.

b. ASTM.

c. AWWA.

3. Materials-California Waterworks Standards: As required in Section 64591 of the California Code of Regulations, for products that will come into contact with drinking water, the Hydrants, Fire, Assemblies and Sections to be furnished under these specifications shall be certified as meeting the specifications of NSF/ANSI 61-2005, including Addendum 1.0-2005.

4. Requirements:

a. Hydrants:

(1) Models: The hydrants shall be of the wet-barrel type, with 2 outlets, 2-1/2 inches by 4 inches, and shall be equivalent to one of the following models:

(a) Clow Model 850.

(b) Long Beach Iron Works Model 425.

(c) James Jones Model J4040.

Samples submitted as part of these specifications will be tested and approved by the Department in accordance with Article 15 of Division B1.

(2) Standards: Hydrants shall comply with the AWWA C503 standard, and shall meet the following requirements:

(a) Cast-Iron: Gray cast-iron bodies shall meet the requirements of ASTM A 126, Class B or ASTM A 48, Class 30. Ductile iron meeting the requirements of ASTM A 536, Grade 65-45-12 will be acceptable as an alternate.

(b) Bronze: Bronze material, except for valve stems, shall meet the requirements of ASTM B 61 or B 62. Bronze material exposed to water and subject to corrosion shall contain not more than 7 percent of zinc or more than 2 percent of aluminum.

(c) Rubber: Rubber valve discs shall be made of Buna-N rubber, 90-durometer, meeting the requirements of ASTM D 2000, Class 2.

(d) Valve: The valve disc assembly shall be designed to rotate freely on the stem. The stem material shall have a minimum tensile strength of 60,000 psi, yield strength of 30,000 psi, and elongation of 16 percent. Acceptable materials include ASTM B 98, UNS C66100 and ASTM B 584, UNS C87600. Pentagonal operating nuts measuring 1-3/4 inches from point to flat shall be furnished for each stem.

(e) Outlet Nozzles: Outlet nozzles shall be removable. Nozzles shall be designed to be secured and able to withstand a torque of 300 foot-pounds applied in either direction without movement. Threads shall conform with the National Standard Fire Hose Coupling Screw Threads standard. An abrupt Higbee cut shall be furnished at the start of the first thread. Plastic threaded caps, chrome yellow, each with a hole to prevent pressure build-up, shall be furnished for each outlet.

(f) Coating:

[1] Interior Coating: Interior coating shall be epoxy-coated with material approved for potable water use under the NSF 61 standard, and in accordance with the AWWA C550 standard, to a thickness of not less than 12 mils. The flange face shall be flash epoxy-coated, to prevent corrosion during shipment and storage.

[a] Holiday Testing: Interior coated surfaces of valve and hydrant parts shall be holiday-free when tested with a low voltage holiday detector. Failure to meet the requirements will be the basis for rejection. The interior coatings on the valves and hydrants that failed shall be repaired and retested for acceptance by the Engineer. Certified test results shall be accompanied to each shipment of hydrants, assemblies, and sections.

[b] Notification: The Engineer shall notify the Contractor of the rejected material and the Contractor shall respond within 3 calendar days to the Engineer at Telephone Number (213) 367-2598. The Contractor shall also schedule a repair or pick-up of the rejected materials within 10 calendar days.

[2] Exterior Coating: Exterior coating shall consist of the following protective coating system:

The first coat will be Amercoat 68 HS, zinc rich epoxy, by Ameron International. The coat shall be applied at 3 to 6 mils Dry Film Thickness (DFT).

The second coat shall be Amerlock 2, epoxy by Ameron International. The coat shall be applied at 4 to 7 mils DFT.

The third coat shall be Amerlock 2, epoxy by Ameron International. The coat shall be applied at 4 to 7 mils DFT.

The fourth coat shall be Amershield, Safety Yellow YE3, polyurethane by Ameron International. The coat shall be applied at 3 to 6 mils DFT.

[3] External Coating System Total Thickness: The total dry film thickness of the completed coating system shall be 20 mils plus or minus 6 mils. The completed coating surface shall be free from runs, drops, ridges, waves, laps, brush marks, and variations in color, texture, and finish.

(g) Flanges: Flanges shall be of a 6-hole pattern with 11/16-inch diameter holes on a 9-3/8-inch bolt circle diameter.

(h) Auxiliary Tap: The top of the hydrant shall be furnished with a 2-1/2inch diameter drilled and tapped hole fitted with a plug.

(i) Bury Midsection: The bury midsection shall be as follows:

[1] General: The bury midsections shall be made from ductile iron meeting the requirements of ASTM A 536, Grade 65-45-12, and shall be in accordance with Drawing A9093-1. The letters “D.I.” shall be cast onto the exterior of each item.

[2] Coating: The interior of the bury midsection shall be epoxy-coated, in accordance with the requirements of the hydrant interior coating as specified in Article 4 of this Division. Flange faces shall be flash epoxy-coated to prevent corrosion during shipment and storage. The exterior shall be painted with a black asphaltic coating, Gibson-Homans “Black Jack Asphalt Enamel”, approximately one-mil thick, in accordance with the manufacturer’s printed instructions.

(j) Bury Elbow: The bury elbow shall be as follows:

[1] General: The bury elbow shall be made from ductile iron meeting the requirements of ASTM A 536, Grade 65-45-12, and in accordance with Drawing A9414. The letters "D.I" shall be cast onto the exterior of each item. The minimum thickness of the elbow shall be 0.50 inch, with a tolerance not to exceed 0.09 inch. The 90-degree elbow shall have a flanged end and a "Tyton" push-on end. The flange face shall have a minimum thickness of 0.70 inch, and shall have six 11/16-inch diameter holes drilled on a 9-3/8 inch bolt circle, oriented in accordance with Drawing A9414. The flange face shall be serrated with 1/32-inch deep serrations. The push-on end shall be configured for a single rubber-gasket joint cavity for joining with one 6-inch ductile-iron pipe, manufactured in accordance with AWWA C151. The push-on end shall be furnished with 2 lugs located perpendicular to the axis of the bend. Both lugs shall be slotted or drilled to receive a 7/8-inch diameter rod.

[2] Coating: The requirements for the interior and exterior coating of the bury elbow shall be the same as for the bury midsection. The epoxy coating shall not exceed 5 mils in thickness within the rubber-gasket area of the bell-joint socket. The flange face shall be flash epoxy-coated to prevent corrosion during shipment and storage.

5. Hydrant Assemblies: Hydrant assemblies shall consist of a 2-1/2-inch x 4-inch top section, a bury midsection 6-inch x 32-inch, and a bury elbow, bolted together so as to operate without leakage at the rated pressure.

6. Bolts, Nuts, and Gaskets: Solid bolts used to connect the bury elbow to the lower flange joint of the bury midsection shall comply with ASTM A 307, galvanized. Heavy hex nuts shall comply with ASTM A 563, galvanized. A full-faced rubber gasket, 1/16-inch thick, shall be used for this connection. The hollow bolts used for the flange joint connecting the top section to the bury midsection shall have a lower breaking point than the rest of the hydrant assembly. Hollow bolts shall be 3 inches in length and shall be in accordance with Drawing A-9153, and shall be installed with the nut uppermost.

The assembly shall be oriented so that each outlet of the hydrant top section faces the inlet side of the bury elbow at a 45-degree angle.

When assembled, hydrants shall be well-fitted and shall operate smoothly.

Each assembled hydrant shall be subjected to a shop test under a hydraulic pressure of 400 psi for 3 minutes. Any leakage or other imperfection revealed by this test shall be corrected, at no cost to the Department, prior to delivery.

7. Quality of Work: All castings shall be sandblasted, clean and sound, without defects that will weaken their structure or impair their service. Repairing of structural defects, or repairs within the bolt circle of any flange face, will not be allowed.

8. Quality Control: The Contractor shall develop, implement, and document the necessary inspection and testing practices to ensure compliance with these specifications. These practices shall be defined in detail in a written Quality Control (QC) Plan, a copy of which shall be furnished to the Engineer within 30 calendar days after award.

a. QC Inspection and Tests: In addition to the inspection and testing requirements of the Standards listed in Article 7 of this Division, the Contractor shall perform the following inspection and tests:

(1) Hydrotest each assembled hydrant under a hydraulic pressure of 400 psi for 3 minutes to test for any leakage and other imperfections.

(2) Test for interior and exterior coating thickness to meet the requirements stated under Article 4 of this Division.

b. Certification: All material shall be furnished with a sworn statement by the contractor that all specified inspection and tests were completed and the results thereof comply with the specifications.

c. QC Inspection and Tests Records: Upon the Engineer's request, daily records of QC inspection and tests and a summary report thereof for a requested series of production dates shall be furnished to the Engineer within 5 calendar days.

9. Quality Assurance Inspection and Tests: As a means of Quality Assurance (QA), inspection will be made and tests shall be performed by the Engineer in the Contractor's mill, factory, yard, or warehouse in accordance with the following:

a. Access: The Engineer will have the right to inspect the Contractor's and the subcontractor's work in the course of manufacture or fabrication and will make such tests from time to time as may be deemed advisable, provided such tests will cause no delay in the production of acceptable materials or equipment. The Contractor shall furnish, at no additional cost to the Department, reasonable facilities, including tools and instruments, for so doing and for obtaining such information as the Engineer desires, respecting the progress and the manner of the work and the character of the materials used.

b. QA Inspection Notification: The Contractor shall notify: Materials Inspection, LOS ANGELES DEPARTMENT OF WATER AND POWER, 433 E. Temple Street, Building 1, LOS ANGELES CA 90051-0100, Telephone Number (213) 367-6818, Fax Number (213) 367- 6666, in advance of the day when:

(1) Manufacture or fabrication starts.

(2) The product is ready for testing.

(3) The finished product is ready for inspection.

The notification shall include the contract number and the contract title.

Should the Engineer elect to waive the right of inspection, or of witnessing tests, and accept certified test reports instead, the Engineer will promptly inform the Contractor.

The advanced timing of the notification shall be in accordance with the following:

(1) Not less than 5 calendar days prior to start of work when the place of manufacture or fabrication is less than 200 driving miles from downtown Los Angeles.

(2) Not less than 14 calendar days prior to start of work when the place of manufacture or fabrication is greater than 200 driving miles from downtown Los Angeles and within the Continental United States.

(3) Not less than 28 calendar days prior to start of work when the place of manufacture or fabrication is outside the continental United States.

c. QA Inspection Travel Costs: When the place of manufacture or fabrication is outside the continental United States, the Contractor shall reimburse the Department for all costs of travel, meals, and lodging, including weekends and holidays, for the Engineer. The Contractor shall reimburse the Department for one unrestricted round-trip airfare per inspector, for 2 inspectors to perform inspection up to 3 times per year.

d. Witness Tests: Mill or factory witness tests shall be made in the presence of the Engineer. The test procedure shall be subject to review and acceptance by the Engineer. The Contractor shall bear all costs of such tests.

e. Certified Test Reports: Five copies of certified reports of all tests shall be furnished to the Department for review. The Engineer will inform the Contractor

within 20 calendar days after receipt of the certified test reports, either that there are no exceptions noted or that the test results show noncompliance with the specifications.

If the test results show noncompliance, the Contractor shall not ship the materials or the equipment covered by such certified test reports until the noncompliance is corrected or unless otherwise instructed by the Engineer.

f. Release: Materials or equipment to be inspected by the Engineer at the Contractor's mill, factory, yard, or warehouse shall not be released for shipment until they have satisfactorily passed the Engineer's inspection and test. Materials or equipment shipped without respecting this requirement may be rejected.

g. Final Acceptance: Final inspection and acceptance will be made upon receipt at the Department's specified receiving points. If any material does not meet the requirements of these specifications, the lot or any faulty portion thereof may be rejected.

10. Shipment: All shipment shall be in wooden pallets to prevent damage in transit and in storage as follows:

a. Hydrant Assemblies: Hydrant assemblies shall be laid down on their sides and securely strapped to 2-way wooden pallets. A maximum of 3 assemblies per pallet will be allowed.

b. Hydrant Top Sections: Top sections shall be securely bolted down, but not strapped, through the flanges to 4-way pallets with a minimum of two 5/8-inch diameter by 3-inch long bolts. No load shall be placed on top of any hydrant.

c. Bury Sections: Bury sections shall be securely strapped to 2-way pallets. Sections shorter than 12 inches shall be strapped or plastic-encased and securely attached to 2-way pallets.

d. Replacement Parts: All shipments of replacement parts shall be properly boxed, crated or packed.

Each package shall contain a detailed packing list, containing package and contract numbers, and a description of the spare parts, including quantities, part identification, and part numbers.

e. Strapping Materials: Strapping material used to secure hydrant assemblies, bury sections, and replacement parts shall be 1.25-inch by 0.031-inch steel and shall be secured by crimping seals.

f. Wooden Pallets: Wooden pallets shall be approximately 42-inch by 42-inch, 2-way or 4-way, and shall be non-deposit and non-returnable. Each finished package on a pallet shall not exceed 4,000 pounds gross weight.

Shipments shall be delivered in open trucks so that they may be unloaded with mobile crane equipment.

ANSELMO G. COLLINS
Acting Director of Supply Chain Services

END OF DIVISION

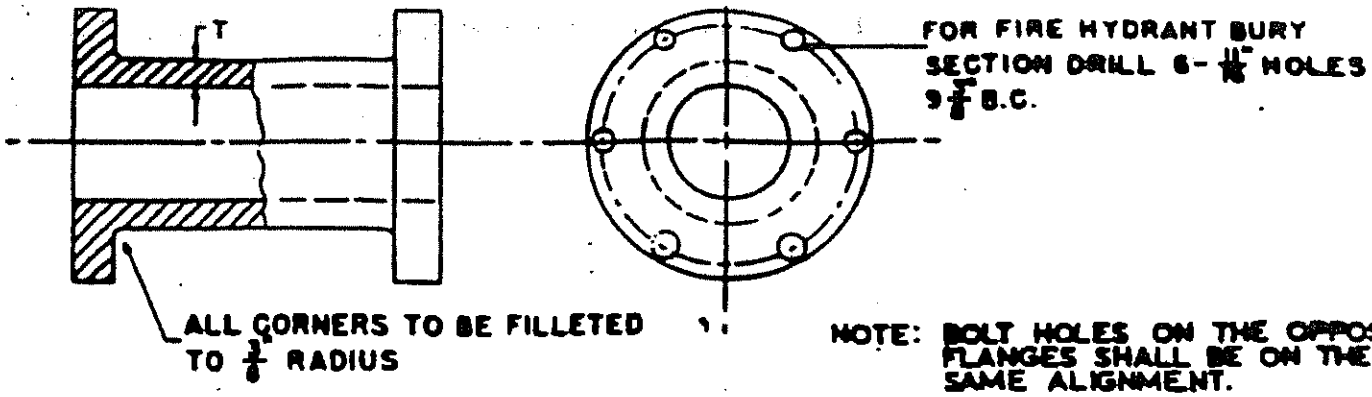

NOTE: BOLT HOLES ON THE OPPOSITE FLANGES SHALL BE ON THE SAME ALIGNMENT.

ITEM	SIZE INCHES	LENGTH UNMACHINED FLANGES INCHES	UNMACHINED FLANGE THICKNESS INCHES	I.D. INCHES	T INCHES	O.D. FLANGE INCHES	LENGTH MACHINED FLANGES INCHES	WEIGHT LBS. ROUGH	WEIGHT LBS. FINISHED
*6	6	2 3/8	1 3/16	6.00	.75	11 1/4	2	41	34
*7	6	3 3/8	1 3/16	6.00	.75	11 1/4	3	60	52
*8	6	6 3/8	1 3/16	6.00	.75	11 1/4	6	66	59
*9	6	12 3/8	1 3/16	6.00	.75	11 1/4	12	91	84
*10	6	18 3/8	1 3/16	6.00	.75	11 1/4	18	116	109
*11	6	24 3/8	1 3/16	6.00	.75	11 1/4	24	140	133
*12	6	32 3/8	1 3/16	6.00	.75	11 1/4	32	174	167
*13	6		1 3/16	6.00	.75	11 1/4			

FIRE HYDRANT BURY SECTION

NO.	DATE	INITIALS	REVISIONS DESCRIPTION	APPROVED
1	11-28	RDS	REF. DWG. A 9093	RSB
2	10-06	G.S.	ADDED NOTE FOR BOLT HOLES	RSB

DEPARTMENT OF WATER AND POWER
WATER SYSTEM — CITY OF LOS ANGELES

	NAME	DATE	APPROVED
DESIGNED	SWB	9-1-49	
DRAWN	RR	2-1-57	
CHECKED	SWB	9-1-49	

CA90931

W.D.S. 912 R-2

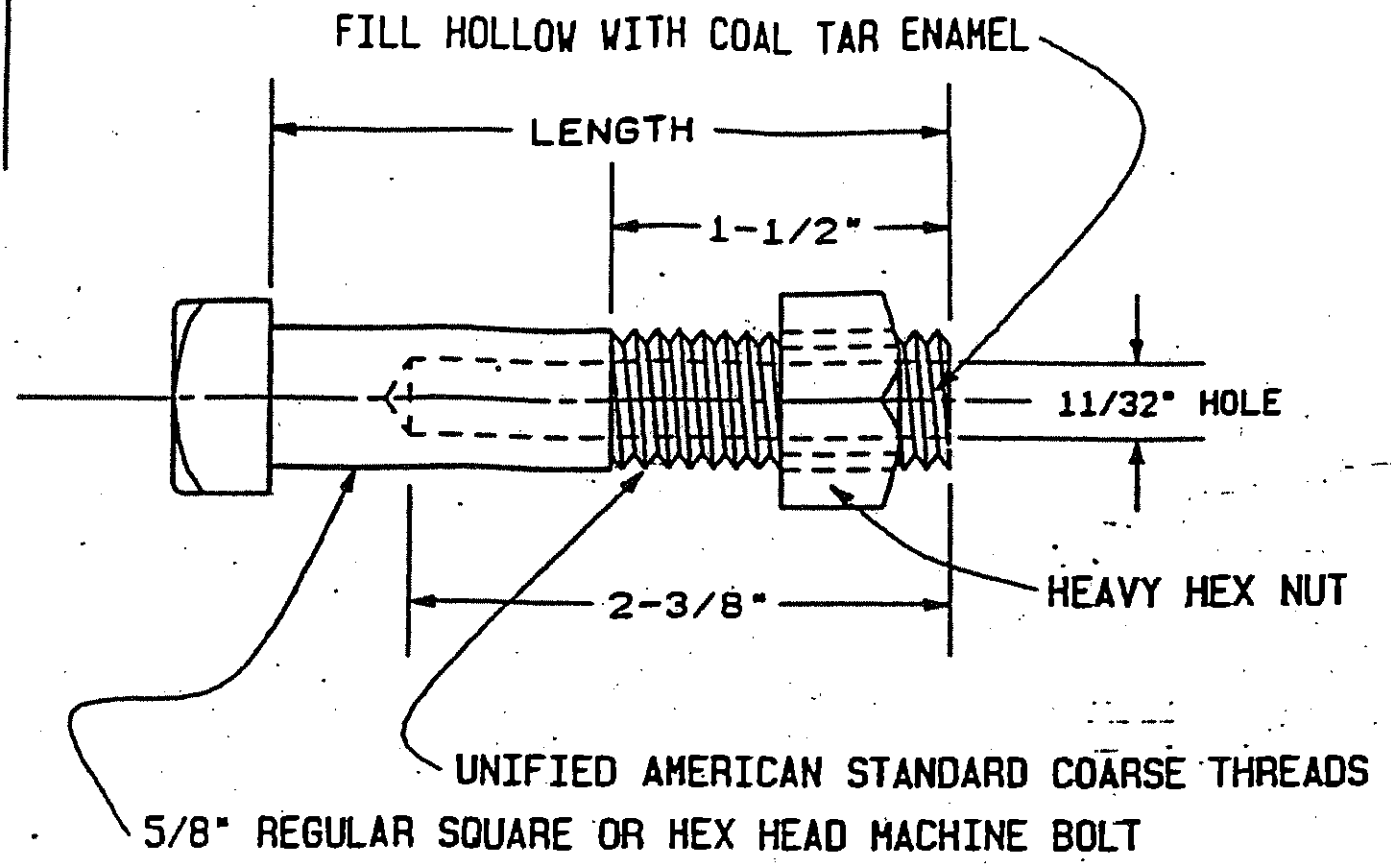

NO.	LENGTH
1	3"
2	3 ½"
3	5"
4	6"
5	7"

MATERIAL : BLACK LOW CARBON STEEL ASTM A 307

HOLLOW STEEL MACHINE BOLT FOR FIRE HYDRANT FLANGE

A-HTC3

REVISIONS				
NO.	DATE	DR'N	DESCRIPTION	APP'V'D
1	1-89	W.D.	ORIGINAL REVISED & REDRAWN	R.S.B.

DEPARTMENT OF WATER AND POWER
WATER SYSTEM — CITY OF LOS ANGELES

	NAME	DATE	APPROVED
DESIGNED	A.K.V.	7-55	
DRAWN	W.D.	1-89	B. Weinstein 1/89
CHECKED	R.S.B.	1-89	

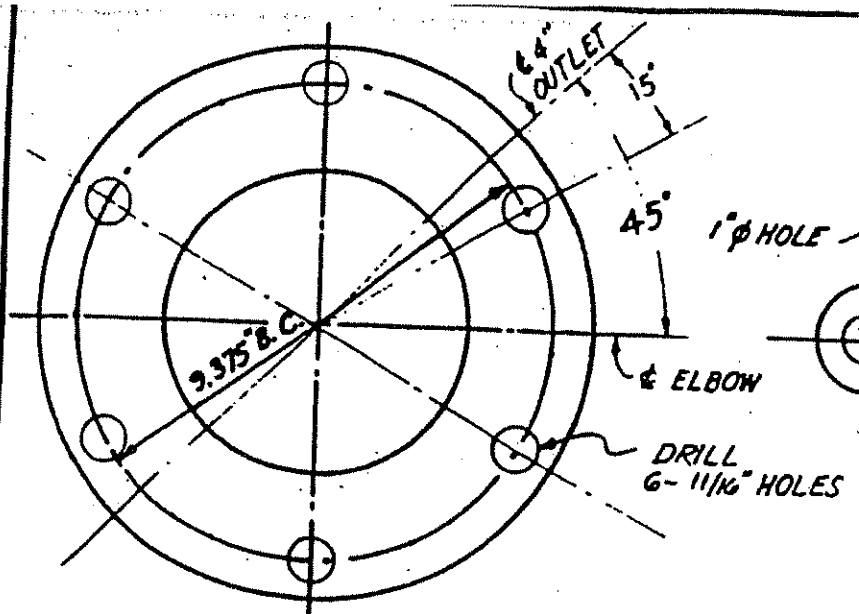

FLANGE PLAN BB

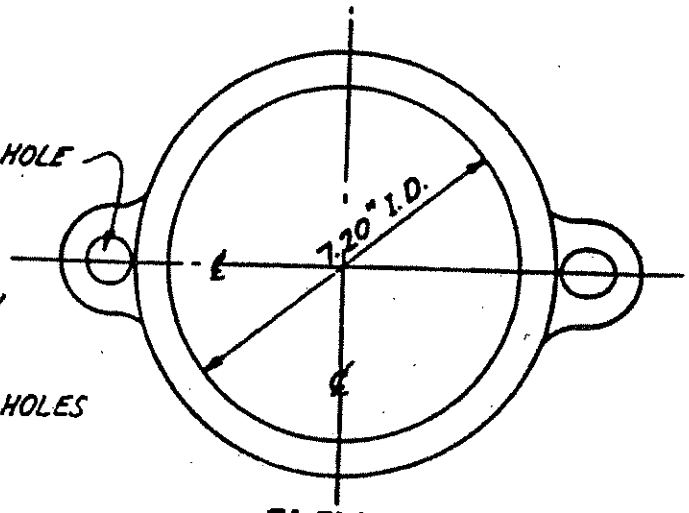

ELEVATION VIEW C C

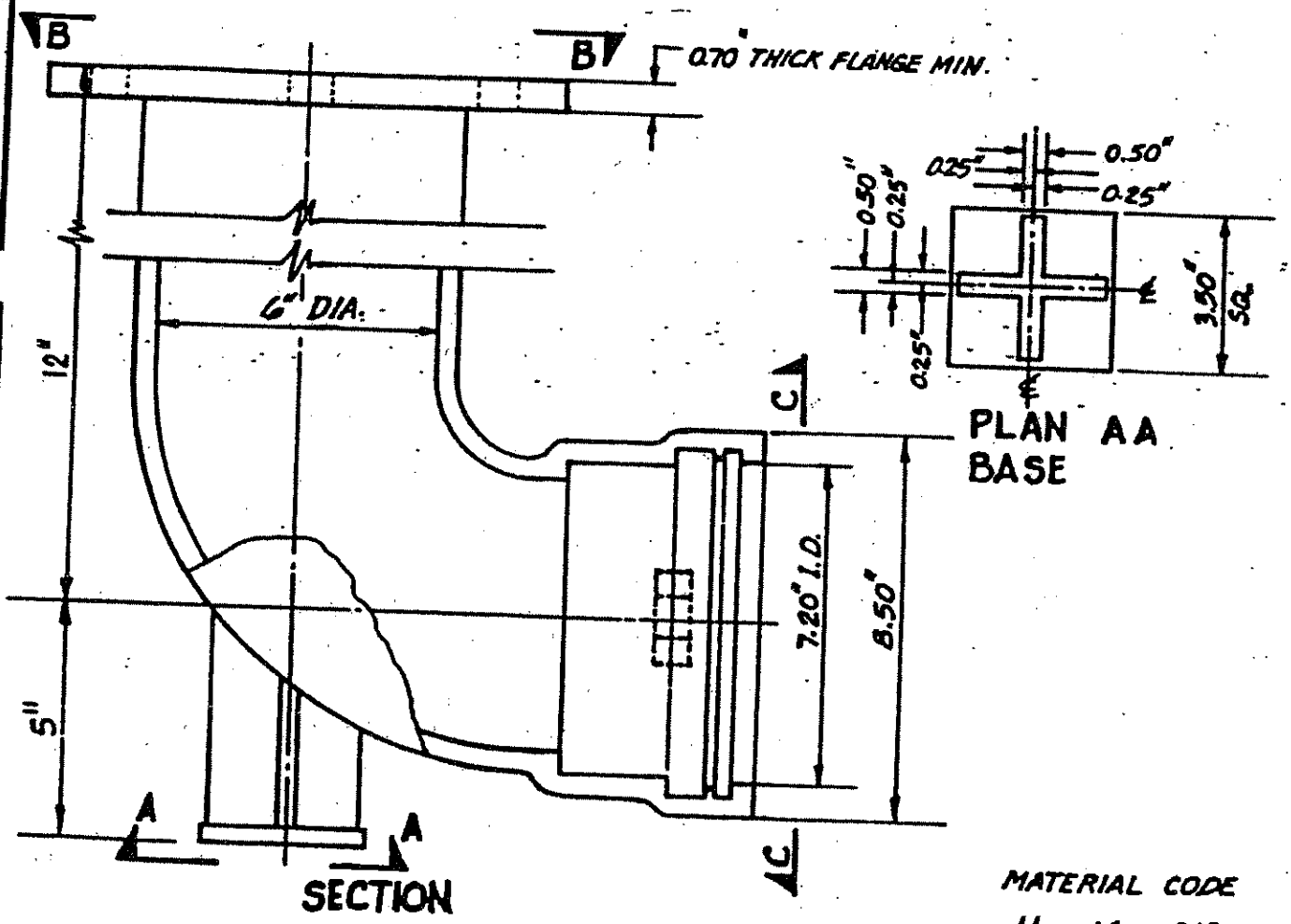

SECTION

PLAN AA BASE

MATERIAL CODE
11 - 16 - 218

0

AWWA R.G. FIRE HYDRANT BURY ELBOW, DUCTILE IRON

A6417

REVISIONS				
	DATE	BY	DESCRIPTION	APP'D
1	12-86	G.S.	REV. HOLES IN FLANGE	RSB

DEPARTMENT OF WATER AND POWER
WATER SYSTEM
CITY OF LOS ANGELES

		DATE		APPROVED	
DESIGNED	Robert Vaupel		12/14/86	Byron Weinstein	11-6-86
DRAWN	G.S.		12/14/86	W. J. Jessing	11-6-86
CHECKED					

ADDENDUM 2

To Specifications 230

Hydrants, Fire, Assemblies and Sections

Dated: July 14, 2010

This is to notify all concerned that the Department of Water and Power of the City of Los Angeles is issuing the following addendum in Connection with its Specifications 230.

Pages C2-1 through C2-2: Pages C2-1 through C2-2 are replaced with Pages C2-1 through C2-2, all dated July 14, 2010 and are transmitted herewith.

Page F2-4: Subarticle 5 of Division F2 now reading:

"**Hydrant Assemblies**: Hydrant assemblies shall consist of a 2-1/2-inch x 4- inch top section, a bury midsection 6-inch x 32-inch, and a bury elbow, bolted together so as to operate without leakage at the rated pressure."

is changed to read:

"**Hydrant Assemblies**(Item 1): Hydrant assemblies shall consist of a 2-1/2-inch x 4- inch top section per 4a(1), a bury midsection per 4a(2)(i), 6-inch x 32-inch, and a bury elbow per 4a(2)(j), bolted together so as to operate without leakage at the rated pressure."

Bids relating to these specifications are to be opened in the Office of the Director of Supply Chain Services at 2:00 p.m. on August 2, 2010. In submitting proposals, all bidders are requested to take cognizance of the addendum to specifications here made.

A copy of this addendum or an acknowledgment thereof shall be returned with the BIDDING DOCUMENTS.

All pages of the BIDDING DOCUMENT, as revised by this addendum, shall be filled out and returned as a part of the bid.

ANSELMO G. COLLINS
Acting Director of Supply Chain Services

PART F - DETAILED SPECIFICATIONS

DIVISION F2 - DETAILED REQUIREMENTS

1. Scope: These specifications cover 4- through 12-inch iron body, resilient-seated, solid-wedge gate valves with a cast or ductile iron gate and with non rising stem. Valves are for cold water service of 250 psi working water pressure. Valve shall be in full compliance with AWWA C509.

2. National Standards: All AISI, ANSI, ASTM, AWWA, FM Global and UL Standards referred to in these standard specifications shall be as last revised. In case of conflict, the Department's specifications shall govern.

3. Materials: Component parts of the valve shall be made of the following materials:

a. Bronze:

(1) Valve stem, if not of stainless steel, shall be cast or forged of bronze and shall have a tensile strength of not less than 55,000 psi, a yield strength of not less than 40,000 psi, with an elongation of not less than 10 percent in 2 inches. Heat treatment may be used to develop the required characteristics.

(2) Stem nut shall be cast or forged of bronze and shall have a tensile strength of not less than 35,000 psi, with a yield strength of not less than 16,000 psi, and with an elongation of not less than 20 percent in 2 inches.

(3) Bronze for all interior parts of the valve shall contain not more than 2 percent aluminum nor more than 7 percent zinc.

(4) The Contractor shall make a minimum of one tensile test from each heat of metal. This test shall be made on the metal after heat treating or annealing is completed. A minimum of one test shall be made from a sample cut from stem castings for each pour or each 100 stems, whichever may be the lesser number of stems. The cut shall be made on the threaded portion below the collar or on the minimal diameter of the stem.

b. Cast Iron:

(1) Cast iron shall meet the requirements of ASTM A 126, Class B. Castings shall be clean and sound without defects of any kind. There shall be no plugging, welding, or repairing of defects.

(2) From each heat of metal, the Contractor shall make and test without charge, 2 deflection test bars and 2 tension test bars. One set of the test bars shall be obtained at the end of the melt.

c. Ductile Iron: Ductile iron shall meet the requirements of ASTM A 536, Grade 70-50-05 or Grade 65-45-12.

d. Rubber: Rubber for the valve wedge shall be new encapsulated ethylene propylene diene Monomer (M-class)(EDPM) rubber. Reclaimed rubber shall not be used.

e. Everdur Metal: Where Everdur metal is specified that metal or equal copper-silicon alloy suitable for the intended service shall be furnished.

f. Stainless Steel: Valve stem made from stainless steel shall be stainless steel AISI type 304 or type 316 and shall have a tensile strength of not less than 55,000 psi, a yield strength of not less than 40,000 psi, with an elongation of not less than 10 percent in 2 inches. The 300 series stainless steel shall be strain-hardened to meet the physical requirements of these specifications.

g. NSF/ANSI Certification: Each bidder shall submit as part of their bid response a written certification from the National Sanitation Foundation/American National Standards Institute Standard 61 (NSF/ANSI 61) that their final product is NSF/ANSI 61 certified. NSF/ANSI 61 certification shall be for all the valve sizes and types that bidder proposes to bid. Failure to provide proof of NSF/ANSI 61 certification as part of the bid shall result in the bid being deemed non responsive to these specifications.

4. General Design:

a. Basis of Structural Design:

(1) All parts of the valve shall be designed for heavy-duty and shall withstand safely and without exceeding the fatigue limit of any part or material (a) the stresses resulting from the specified hydrostatic test pressure in Subarticle 18a

of this Division and (b) the combined stresses resulting from the full specified working water pressure in Subarticle 18a of this Division coincident with the moving of the wedge across the seats under full unbalanced pressure from fully closed position to the point of opening.

(2) The body, bonnet, and the internal parts of the valve shall be so constructed that it will be possible to apply sufficient torque to the valve stem, in the closing direction with the valve closed and with the valve internally subjected to the working water pressure, to cause the stem to fail without causing permanent deformation of any other part except the O-ring seal plate. The valve cap or O-ring seal plate may be designed to break before the valve stem; provided, however, that the torque load requirements are exceeded before any part breaks or is strained beyond its yield point.

b. **Size of Waterway**: With the gate open, each valve shall afford an unobstructed waterway of diameter not less than the full nominal diameter of the valve.

c. **Opening Direction**: Wrench nut shall turn left (counterclockwise) to open the valve.

d. **Underwriter Laboratories/FM Global Certification**: Each bidder shall submit as part of their bid response a written certification from the Underwriter Laboratories (UL) and Factory Mutual (FM) Global certifications that their final product is UL 262 and FM Global 1120/1130 certified. UL 262 and FM Global 1120/1130 certification shall be for all the valve sizes and types that bidders propose to bid. Failure to provide proof of UL and FM 1120/1130 certification as part of the bid proposal shall result in the bid being deemed non responsive to these specifications.

5. **Bodies and Bonnets**:

a. The body and bonnet shall be made of ductile iron, shall be smooth and free of defects of any kind, and shall be ribbed at all points necessary to prevent structural damage when subject to the required test pressure.

b. The minimum thickness of the metal in each body and bonnet shall comply with AWWA C509, Table 2. If a reduced wall design is used, the body and bonnet thickness shall comply with AWWA C515, Table 2.

c. The necks of all flanges shall be thickened, and corners shall be coved and rounded in accordance with the best foundry practice.

d. The thrust bearing recess and the stem opening in the bonnet shall be machine finished.

e. The bonnet flanges shall have flat machined faces.

6. Bonnet Nuts and Bolts: Bonnet nuts and bolts shall be stainless steel meeting the requirements of ASTM A 276, Type 304 or 316. Bolts and nuts shall be heavy hex conforming to ANSI B18.2.1 and B18.2.2, respectively. The bonnet bolts shall be assembled with the nuts on top. The bolts shall be of such length, that when installed they will extend one or 2 threads beyond the nuts. If the bonnet bolts are countersunk, the bolt holes shall be wax-sealed or capped.

7. Valve Ends:

a. Bell Ends:

(1) Rubber Gasket Bell: Two lugs shall be provided, located diametrically and on a quadrant from the valve stem. The lugs shall be slotted or drilled to receive a 7/8-inch diameter rod. The lugs shall have a minimum thickness of 1-3/8 inches, minimum height of 1-9/16 inches, and minimum length of 2-3/8 inches.

The valve shall not have fins or other bracing from the body to the bell that would interfere with a band being placed around the bell.

(2) Tyton Joint End: The configuration of the cavity in the socket of the bell shall be shaped to receive a Tyton joint rubber gasket and spigot of ductile iron pipe manufactured in accordance with AWWA C151. Bidder shall be licensed by the United States Pipe and Foundry Company to use Tyton joint end.

[a] Bidders shall submit during time bid written proof that the Tyton end joints are licensed by the United States Pipe and Foundry Company(U.S. Pipe) and in compliance with the Tyton end joint design. Submission of proof shall include Tyton end joint drawings for the sizes proposed for bid. Bidder that fails to submit written proof of the Tyton end joint license agreement and Tyton end joints drawings for the sizes proposed in the bid shall be deemed non responsive.

b. Flanged Ends:

(1) The end flanges of a flanged end gate valve for 250 psi working water pressure shall conform in dimensions and drilling to ANSI B16.42 for Class 150, ductile-iron flanges. The flange faces shall not be raised.

(2) All flanges shall have a serrated finish obtained by using a V-shaped tool. Serrations shall have grooves 1/64 inch in depth and 1/32 inch apart. Serrations shall be concentric.

8. Gate:

a. The gate shall be cast gray or ductile iron with guide bars or channels for controlled movement.

b. The gate shall be constructed for resistance to deflection.

c. The gate and gate guide bars or channels shall be fully encapsulated by a resilient rubber material bonded to the metal. The gate stem bore, if not also encapsulated, shall be epoxy-coated.

d. The method used to prove the rubber-to-metal bond shall be in accordance with the requirements of ASTM D 429. The peel strength shall not be less than 75 pounds per inch.

e. The gate guide encapsulation may consist of a harder grade of ebonit rubber or may contain thermoplastic guide inserts.

9. Stem and Stem Nut:

a. Stem shall be of the nonrising type.

b. Stem and stem nut shall be cast or forged, or rolled and forged, and shall meet the requirements specified in Subarticle 3a and Subarticle 3f of this Division. Stem collars shall be cast or forged integral with the stem.

c. The threads of the stem and stem nut shall be Acme type, cut with sufficient number of cuts to avoid straining the metal.

d. Stem and stem nut shall be turned, threaded straight and true, and shall work true and smooth and in a straight line throughout the lift of opening and thrust of closing the valve.

e. Stem shall be of such length that the threads of the stem nut are entirely engaged when the valve is in the closed position.

f. Threaded length of the stem nut shall be not less than 1-1/4 times the outside diameter of the stem.

g. The stem and all parts of the valve shall be capable of resisting the stress involved when the torque loads of Table 1 of the AWWA C509 are applied to the stem in the closing and open direction, with the valve closed and subjected to 250 psi water working pressure, without causing permanent deformation of any valve part.

h. The diameter of the stem at the base of the thread or at any point below that portion shaped to receive the wrench nut shall be not less than the diameter on Table 7 of the AWWA C509.

10. Stem Seals:

a. O-Ring Seal Plate: The O-ring seal plate shall be made of cast or ductile iron. The stem opening, thrust bearing recess, and bonnet face shall be smooth, machine finished. A stem seal cartridge of synthetic polymer with physical properties suitable for the intended application may be used in place of an O-ring seal plate.

b. O-Ring Seal Plate Bolting: Bolts, nuts, and washers shall be of similar metal which shall be stainless steel, or of rolled or forged Everdur metal, or equal copper-silicon alloy. Bolts and nuts made of stainless steel shall meeting the requirements of ASTM A 276; Type 304 or 316. Bolts and nuts shall be heavy hex conforming to ANSI B18.2.1 and B18.2.2, respectively. The bolts shall be of such length that when installed they will extend one or 2 threads beyond the nuts.

c. Seals: When an O-ring or other pressure-actuated stem seal is used, the design shall incorporate 2 such seals.

11. Wrench Nut:

a. Wrench nut shall be made of cast gray or ductile iron, fitted to the top of the valve stem and secured by a heavy hex steel nut or heavy hex head cap screw meeting the requirements of ASTM A 307, Grade B, furnished with unified coarse threads.

b. Wrench nut shall be 1-15/16 inches square at the top, 2 inches square at the base, and 1-3/4 inches high. The nut shall have a flanged base upon which shall be cast an arrow at least 2 inches long showing the counterclockwise direction of opening and the word "OPEN" in distinct 1/2-inch letters.

12. Gaskets: Gaskets shall be full cut, with holes to pass bolts, or cut to fit inside of bolts, and shall be used on all flanged joints intended to be watertight. Gasket material shall be free from corrosive alkali or acid ingredients.

13. Workmanship:

a. All materials and workmanship shall comply with these standard specifications. All materials and equipment furnished shall be new and unused, but such requirements shall not preclude the use of recycled materials in the manufacturing processes, provided that all such materials comply with these standard specifications. All work shall be done in a thorough, workmanlike manner by mechanics skilled in their various trades.

b. All foundry and machine work shall be done in accordance with the best modern practice for the class of work involved.

c. All parts shall conform to the required dimensions and shall be free from injurious defects. All machined parts shall be made to template or gage.

d. All joints shall be faced true and shall be watertight where subject to water pressure.

e. All iron parts receiving nonferrous mountings shall be made true and smooth, and the nonferrous mountings shall be finished to fit.

f. All parts of valves of the same size and same make shall be interchangeable.

g. Flanges shall be machined at right angles to their respective axes and shall be accurately faced.

14. Markings: The valve shall have cast in plain letters on the body or bonnet the name of the manufacturer, the year the valve casting was made, the size of the valve, and the working water pressure. Tyton end joints valves shall have a Tyton trade mark casted integrally on to the valve.

15. Interior Coating:

a. All interior ferrous surfaces of the valve exposed to water and subject to corrosion shall be sandblasted in accordance with Steel Structures Painting Council Specifications No. SSPC-SP5 for White Metal Blast Cleaning. Shotblasting methods shall not be used. Before sandblasting, all projections and objectionable irregularities shall be carefully removed, all sharp edges and corners shall be ground smooth, and all oil and grease shall be removed by the use of an effective solvent. After sandblasting, all debris of the sandblasting process shall be removed from the surfaces to be coated. Coatings shall be NSF 61 approved.

b. The interior coating shall immediately follow the sandblasting and shall be one of the following epoxy coating systems:

(1) Powder, fusion bounded epoxies, thermosetting.

(2) Two part epoxy “Amerlock 2.”

c. The coating shall be applied in accordance with the manufacturer's printed instructions and shall have a dry film thickness of 10 mils nominal but not less than 6 mils nor more than 20 mils. The coating shall be applied to all stationary interior ferrous surfaces including all interior openings in the valve body. The coating shall be tested for the proper thickness in accordance with the Coating Thickness Test detailed in AWWA C550, and re-coated if the thickness is not as specified above. Coating shall not be applied to the gasket surfaces of the end flanges. After the coating is completely cured, the coated surface shall be tested for porosity, holidays, and pinholes in accordance with the Coating Thickness Test detailed in AWWA C550. Holiday detector shall be set to a minimum of 67.5 Volts. All holidays or irregularities shall be repaired until compliance is obtained and the coating again tested in accordance with the Holiday Testing Procedure detailed in AWWA C550.

16. Exterior Coating: The exterior ferrous surfaces of each valve shall be coated and tested as specified in Article 15 of these standard specifications, except that the surfaces shall be sandblasted to SSPC-SP6 (Commercial Grade) requirements prior to coating, or as recommended by the coating manufacturer's printed instructions in writing.

17. Inspection: Inspection shall be as follows:

a. The Engineer shall at all times have the right to inspect the work in the course of manufacture and make such tests from time to time as the Engineer may deem advisable, providing no delay in production of acceptable materials or equipment is caused thereby.

b. Onsite Work: Wherever a test or inspection is required before starting any work activity, a phase thereof, or work by a different craft, notify the Engineer in writing not less than 14 working days in advance, unless otherwise specified in these specifications.

c. Offsite Work: Unless otherwise specified in these Specifications, when items are to be tested or shop-fabricated, schedule plant inspection by contacting the Engineer in writing within the following time frames. The written notification shall include a schedule of activities on a daily basis. This notification requirement also applies when work is performed in phases or is interrupted.

(1) Not less than 14 days prior to start of work when the fabrication shop is less than 200 driving miles from downtown Los Angeles and is in the continental United States.

(2) Not less than 30 days prior to start of work when the fabrication shop is greater than 200 driving miles from downtown Los Angeles and is in the continental United States.

(3) Not less than 60 days prior to start of work when the fabrication shop is outside the continental United States.

(4) When the fabrication shop is greater than 200 driving miles from downtown Los Angeles or is outside the continental United States, reimburse the Department for all costs of entry visas, if necessary, travel, meals, parking, and lodging, including weekends and holidays, for each Engineer performing the inspection. The Contractor shall reimburse the

Department for one unrestricted round-trip airfare per inspector for up to 2 inspectors to perform inspections up to 3 times per year. The expense of additional inspection tests after the third inspection will be borne by the Department. The appropriate methods of travel to and from the inspection or test facility will be determined by the Department. Airline travel costs will be based on unrestricted, coach, round-trip airfare, from an airport of the Department's choice within the greater Los Angeles area. Automobile rental will be a standard compact. Lodging facilities will be determined by the Department.

(5) Failure to give written notice prior to doing work will require the removal and replacement of the work without additional cost to the Department if the Engineer cannot fully inspect all parts of the work to determine whether or not the work complies with these specifications. Furnish the Engineer with facilities, samples, information, and proper access authority for inspection and tests.

d. Before offering a lot for inspection, the Contractor shall eliminate any portion which in the Contractor's opinion is defective or does not meet the requirements of the specifications.

e. **Re-Inspection Expenses:** The Department will assess the Contractor for additional expenses incurred by the Department as a result of the Contractor incorrectly notifying the Engineer that material or equipment was ready for inspection or testing, or if equipment does not pass inspection or testing and must be re-inspected. If re-inspection is required due to the Contractor's failure to comply with any portion of these specifications, the Contractor shall pay to the Department, or the Department may deduct from any moneys due the Contractor, a sum of $100.00 per hour for the Engineer's time to re-inspect, including travel time to and from the testing location, plus transportation, meals, parking, and lodging costs to and from the testing location.

The fact that the materials or equipment have been successfully inspected, tested, and accepted by the Engineer shall not relieve the Contractor of responsibility in the case of later discovery of flaws or defects or other failure to comply with these specifications.

f. The Contractor shall notify the Stores Superintendent, Department of Water and Power, 433 East Temple Street, Los Angeles, California 90012, Telephone Number (213) 367-6800 not less than 5 working days prior to the start of manufacture. Should the Contract Administrator or Engineer

elect to waive the right of inspection, the Contract Administrator or Engineer will promptly inform the Contractor.

18. Hydrostatic Tests:

a. Each valve shall be tested hydrostatically at the specified working water pressure of 250 psi and at the full hydrostatic test pressure of 500 psi.

b. The working water pressure shall be applied through bulkheads alternately to each end of the closed gate with the opposite end open for inspection. There shall be no leakage through the metal, seals, or flanged joints. The leakage past the seat during each alternate test shall not exceed a rate of zero fluid ounce per hour per inch of nominal valve size.

c. The hydrostatic test pressure shall be applied through one of the bulkheads, when both ends are bulkheaded, and the gate in the open position. There shall be no leakage through the metal, seals, or flanged joints and no permanent deformation of the casting.

d. For each mode of testing, the pressure shall be held for a minimum of one minute.

19. Test Reports: The Contractor shall furnish the Department 3 certified copies of all test reports covering results of all tests performed. All the valves shall be tested per Article 18 of this Division and test results shall be submitted to the Contract Administrator or Department personnel specified by the Contract Administrator. All test reports shall be accompanied by a letter of transmittal to the Contract Administrator or Department personnel specified by the Contract Administrator.

20. Delivery: During delivery, rubber wedges shall be protected from the elements. Flanges shall be covered with plywood or suitable material such as shrink wraps to protect from damage during transport. Valves shall arrive in pallets. All valves shall lie horizontally on the pallet. Wedges shall be perpendicular to the floor of the pallet. When multiple valves are delivered with multiple layers of valves on top of each other, plywood shall separate the layers of valves. The last layer of valves shall have plywood on top covering all the valves of the last layer. All equipment shall be delivered by truck and shall be capable of being unloaded from 3 sides of the truck bed with a forklift loader or from above with an overhead crane. Trucks with enclosed beds shall not be used.

21. Submittal Drawings/ Specifications: Each bidder during time of bid shall submit as part of the proposal 2 copies of drawings and specifications of all the valves proposed to be furnished. The drawings shall be combination of foundry, shop and production detail working drawings of the valves showing the net weight of the valve, dimensions and tolerances of the valve. All specific details mentioned in the Department specifications shall be shown and described on the bidder drawings and specifications including internal components and mechanisms of the valve. Drawings of all individual internal components and mechanisms “as finished parts” shall be included with dimensions and tolerances. The drawings shall show a schedule of the parts and the materials with ASTM/ANSI standard designation of which they are made and shall have sufficient detail to serve as a guide in the assembly and disassembly of the valve and in ordering repair parts. Failure to supply drawings and specifications shall result in the bid being deemed non responsive to these specifications.

The sample submitted in accordance with Article 17 of Division B1 shall match the dimensions, tolerances and materials posted on the bidder drawings and specification and the Department specifications, otherwise the bid shall be deemed non responsive.

The valves furnished shall match the dimensions, tolerances, and materials posted on the submittal drawings and specifications at all times.

END OF DIVISION

ANSELMO G. COLLINS
Acting Director of Supply Chain Services

PART F - DETAILED SPECIFICATIONS

DIVISION F2 - DETAILED REQUIREMENTS

1. **Scope**: These specifications cover 4- through 12- inch iron body, resilient-seated, solid-wedge gate valves with a cast or ductile iron gate and with non rising stem. Valves are for cold water service of 250 psi working water pressure. Valve shall be in full compliance with AWWA C509.

2. **National Standards**: All AISI, ANSI, ASTM, AWWA, FM Global and UL Standards referred to in these standard specifications shall be as last revised. In case of conflict, the Department's specifications shall govern.

3. **Materials**: Component parts of the valve shall be made of the following materials:

a. **Bronze**:

(1) Valve stem, if not of stainless steel, shall be cast or forged of bronze and shall have a tensile strength of not less than 55,000 psi, a yield strength of not less than 38,000 psi, with an elongation of not less than 10 percent in 2 inches. Heat treatment may be used to develop the required characteristics.

(2) Stem nut shall be cast or forged of bronze and shall have a tensile strength of not less than 30,000 psi, with a yield strength of not less than 14,000 psi, and with an elongation of not less than 20 percent in 2 inches.

(3) Bronze for all interior parts of the valve shall contain not more than 2 percent aluminum nor more than 7 percent zinc.

(4) The Contractor shall make a minimum of one tensile test from each heat of metal. This test shall be made on the metal after heat treating or annealing is completed. A minimum of one test shall be made from a sample cut from stem castings for each pour or each 100 stems, whichever may be the lesser number of stems. The cut shall be made on the threaded portion below the collar or on the minimal diameter of the stem.

b. **Cast Iron:**

(1) Cast iron shall meet the requirements of ASTM A 126, Class B. Castings shall be clean and sound without defects of any kind. There shall be no plugging, welding, or repairing of defects.

(2) From each heat of metal, the Contractor shall make and test without charge, 2 deflection test bars and 2 tension test bars. One set of the test bars shall be obtained at the end of the melt.

c. **Ductile Iron:** Ductile iron shall meet the requirements of ASTM A 536, Grade 70-50-05 or Grade 65-45-12.

d. **Rubber:** Rubber for the valve wedge shall be new encapsulated ethylene propylene diene Monomer (M-class)(EDPM) rubber. Reclaimed rubber shall not be used.

e. **Everdur Metal:** Where Everdur metal is specified that metal or equal copper-silicon alloy suitable for the intended service shall be furnished.

f. **Stainless Steel:** Valve stem made from stainless steel shall be stainless steel AISI type 304 or type 316 and shall have a tensile strength of not less than 55,000 psi, a yield strength of not less than 40,000 psi, with an elongation of not less than 10 percent in 2 inches. The 300 series stainless steel shall be strain-hardened to meet the physical requirements of these specifications.

4. **General Design:**

a. **Basis of Structural Design:**

(1) All parts of the valve shall be designed for heavy-duty and shall withstand safely and without exceeding the fatigue limit of any part or material (a) the stresses resulting from the specified hydrostatic test pressure in Subarticle 18a of this Division and (b) the combined stresses resulting from the full specified working water pressure in Subarticle 18a of this Division coincident with the moving of the wedge across the seats under full unbalanced pressure from fully closed position to the point of opening.

(2) The body, bonnet, and the internal parts of the valve shall be so constructed that it will be possible to apply sufficient torque to the valve stem, in the closing direction with the valve closed and with the valve internally subjected to the working water pressure, to cause the stem to fail without causing permanent deformation of any other part except the O-ring seal plate. The valve cap or O-ring seal plate may be designed to break before the valve stem; provided, however, that the torque load requirements are exceeded before any part breaks or is strained beyond its yield point.

b. **Size of Waterway:** With the gate open, each valve shall afford an unobstructed waterway of diameter not less than the full nominal diameter of the valve.

c. **Opening Direction:** Wrench nut shall turn left (counterclockwise) to open the valve.

5. **Bodies and Bonnets:**

a. The body and bonnet shall be made of ductile iron, shall be smooth and free of defects of any kind, and shall be ribbed at all points necessary to prevent structural damage when subject to the required test pressure.

b. The minimum thickness of the metal in each body and bonnet shall comply with AWWA C509, Table 2. If a reduced wall design is used, the body and bonnet thickness shall comply with AWWA C515, Table 2.

c. The necks of all flanges shall be thickened, and corners shall be coved and rounded in accordance with the best foundry practice.

d. The thrust bearing recess and the stem opening in the bonnet shall be machine finished.

e. The bonnet flanges shall have flat machined faces.

6. **Bonnet Nuts and Bolts:** Bonnet nuts and bolts shall be stainless steel meeting the requirements of ASTM A 276, Type 304 or 316. Bolts and nuts shall be heavy hex conforming to ANSI B18.2.1 and B18.2.2, respectively. The bolts shall be of such length, that when installed they will extend one or 2 threads beyond the nuts. If the bonnet bolts are countersunk, the bolt holes shall be wax-sealed or capped.

7. **Valve Ends:**

a. **Bell Ends:**

(1) **Rubber Gasket Bell:** Two lugs shall be provided, located diametrically and on a quadrant from the valve stem. The lugs shall be slotted or drilled to receive a 7/8-inch diameter rod. The lugs shall have a minimum thickness of 1-3/8 inches, minimum height of 1-9/16 inches, and minimum length of 2-3/8 inches.

The valve shall not have fins or other bracing from the body to the bell that would interfere with a band being placed around the bell.

(2) **Tyton Joint End:** The configuration of the cavity in the socket of the bell shall be shaped to receive a Tyton joint rubber gasket and spigot of ductile iron pipe manufactured in accordance with AWWA C151. Bidder shall be licensed by the United States Pipe and Foundry Company to use Tyton joint end.

b. **Flanged Ends:**

(1) The end flanges of a flanged end gate valve for 250 psi working water pressure shall conform in dimensions and drilling to ANSI B16.42 for Class 150, ductile-iron flanges. The flange faces shall not be raised.

8. **Gate:**

a. The gate shall be cast gray or ductile iron with guide bars or channels for controlled movement.

b. The gate shall be constructed for resistance to deflection.

c. The gate and gate guide bars or channels shall be fully encapsulated by a resilient rubber material bonded to the metal. The gate stem bore, if not also encapsulated, shall be epoxy-coated.

d. The method used to prove the rubber-to-metal bond shall be in accordance with the requirements of ASTM D 429. The peel strength shall not be less than 75 pounds per inch.

e. The gate guide encapsulation may consist of a harder grade of ebonit rubber or may contain thermoplastic guide inserts.

9. **Stem and Stem Nut:**

a. Stem shall be of the nonrising type.

b. Stem and stem nut shall be cast or forged, or rolled and forged, and shall meet the requirements specified in Subarticle 3a and Subarticle 3f of this Division. Stem collars shall be cast or forged integral with the stem.

c. The threads of the stem and stem nut shall be Acme type, cut with sufficient number of cuts to avoid straining the metal.

d. Stem and stem nut shall be turned, threaded straight and true, and shall work true and smooth and in a straight line throughout the lift of opening and thrust of closing the valve.

e. Stem shall be of such length that the threads of the stem nut are entirely engaged when the valve is in the closed position.

f. Threaded length of the stem nut shall be not less than 1-1/4 times the outside diameter of the stem.

g. The stem and all parts of the valve shall be capable of resisting the stress involved when the torque loads of Table 1 of the AWWA C509 are applied to the stem in the closing and open direction, with the valve closed and subjected to 250 psi water working pressure, without causing permanent deformation of any valve part.

h. The diameter of the stem at the base of the thread or at any point below that portion shaped to receive the wrench nut shall be not less than the diameter on Table 7 of the AWWA C509.

10. **Stem Seals:**

a. **O-Ring Seal Plate:** The O-ring seal plate shall be made of cast or ductile iron. The stem opening, thrust bearing recess, and bonnet face shall be smooth, machine finished. A stem seal cartridge of synthetic polymer with physical properties suitable for the intended application may be used in place of an O-ring seal plate.

b. **O-Ring Seal Plate Bolting**: Bolts, nuts, and washers shall be of similar metal which shall be stainless steel, or of rolled or forged Everdur metal, or equal copper-silicon alloy. Bolts and nuts made of stainless steel shall meeting the requirements of ASTM A 276; Type 304 or 316. Bolts and nuts shall be heavy hex conforming to ANSI B18.2.1 and B18.2.2, respectively. The bolts shall be of such length that when installed they will extend one or 2 threads beyond the nuts.

c. **Seals**: When an O-ring or other pressure-actuated stem seal is used, the design shall incorporate 2 such seals.

11. **Wrench Nut**:

a. Wrench nut shall be made of cast gray or ductile iron, fitted to the top of the valve stem and secured by a heavy hex steel nut or heavy hex head cap screw meeting the requirements of ASTM A 307, Grade B, furnished with unified coarse threads.

b. Wrench nut shall be 1-15/16 inches square at the top, 2 inches square at the base, and 1-3/4 inches high. The nut shall have a flanged base upon which shall be cast an arrow at least 2 inches long showing the counterclockwise direction of opening and the word "OPEN" in distinct 1/2-inch letters.

12. **Gaskets**: Gaskets shall be full cut, with holes to pass bolts, or cut to fit inside of bolts, and shall be used on all flanged joints intended to be watertight. Gasket material shall be free from corrosive alkali or acid ingredients.

13. **Workmanship**:

a. All materials and workmanship shall comply with these standard specifications. All materials and equipment furnished shall be new and unused, but such requirements shall not preclude the use of recycled materials in the manufacturing processes, provided that all such materials comply with these standard specifications. All work shall be done in a thorough, workmanlike manner by mechanics skilled in their various trades.

b. All foundry and machine work shall be done in accordance with the best modern practice for the class of work involved.

c. All parts shall conform to the required dimensions and shall be free from injurious defects. All machined parts shall be made to template or gage.

d. All joints shall be faced true and shall be watertight where subject to water pressure.

e. All iron parts receiving nonferrous mountings shall be made true and smooth, and the nonferrous mountings shall be finished to fit.

f. All parts of valves of the same size and same make shall be interchangeable.

g. Flanges shall be machined at right angles to their respective axes and shall be accurately faced.

14. Markings: The valve shall have cast in plain letters on the body or bonnet the name of the manufacturer, the year the valve casting was made, the size of the valve, and the working water pressure. Tyton end joints valves shall have a Tyton trade mark casted integrally on to the valve.

15. Interior Coating:

a. All interior ferrous surfaces of the valve exposed to water and subject to corrosion shall be sandblasted in accordance with Steel Structures Painting Council Specifications No. SSPC-SP5 for White Metal Blast Cleaning. Shotblasting methods shall not be used. Before sandblasting, all projections and objectionable irregularities shall be carefully removed, all sharp edges and corners shall be ground smooth, and all oil and grease shall be removed by the use of an effective solvent. After sandblasting, all debris of the sandblasting process shall be removed from the surfaces to be coated. Coatings shall be NSF 61 approved.

b. The interior coating shall immediately follow the sandblasting and shall be one of the following epoxy coating systems:

(1) Powder, fusion bounded epoxies, thermosetting.

(2) Two part epoxy "Amerlock 2."

c. The coating shall be applied in accordance with the manufacturer's printed instructions and shall have a dry film thickness of 10 mils nominal but not less than 6 mils nor more than 20 mils. The coating shall be applied to all stationary interior ferrous surfaces including all interior openings in the valve body. The coating shall be tested for the proper thickness in accordance with the Coating Thickness Test detailed in AWWA C550, and re-coated if the thickness is not as specified above. Coating shall not be applied to the gasket surfaces of the end flanges. After the coating is completely cured, the coated surface shall be tested for porosity, holidays, and pinholes in accordance with the Coating Thickness Test detailed in AWWA C550. Holiday detector shall be set to a minimum of 67.5 Volts. All holidays or irregularities shall be repaired until compliance is obtained and the coating again tested in accordance with the Holiday Testing Procedure detailed in AWWA C550.

16. **Exterior Coating**: The exterior ferrous surfaces of each valve shall be coated and tested as specified in Article 15 of these standard specifications, except that the surfaces shall be sandblasted to SSPC-SP6 (Commercial Grade) requirements prior to coating, or as recommended by the coating manufacturer's printed instructions in writing.

17. **Inspection**: Inspection shall be as follows:

a. The Engineer shall at all times have the right to inspect the work in the course of manufacture and make such tests from time to time as the Engineer may deem advisable, providing no delay in production of acceptable materials or equipment is caused thereby.

b. Onsite Work: Wherever a test or inspection is required before starting any work activity, a phase thereof, or work by a different craft, notify the Engineer in writing not less than 14 working days in advance, unless otherwise specified in these specifications.

c. Offsite Work: Unless otherwise specified in these Specifications, when items are to be tested or shop-fabricated, schedule plant inspection by contacting the Engineer in writing within the following time frames. The written notification shall include a schedule of activities on a daily basis. This notification requirement also applies when work is performed in phases or is interrupted.

(1) Not less than 14 days prior to start of work when the fabrication shop is less than 200 driving miles from downtown Los Angeles and is in the continental United States.

(2) Not less than 30 days prior to start of work when the fabrication shop is greater than 200 driving miles from downtown Los Angeles and is in the continental United States.

(3) Not less than 60 days prior to start of work when the fabrication shop is outside the continental United States.

(4) When the fabrication shop is greater than 200 driving miles from downtown Los Angeles or is outside the continental United States, reimburse the Department for all costs of entry visas, if necessary, travel, meals, parking, and lodging, including weekends and holidays, for each Engineer performing the inspection. The Contractor shall reimburse the Department for one unrestricted round-trip airfare per inspector for up to 2 inspectors to perform inspections up to 3 times per year. The expense of additional inspection tests after the third inspection will be borne by the Department. The appropriate methods of travel to and from the inspection or test facility will be determined by the Department. Airline travel costs will be based on unrestricted, coach, round-trip airfare, from an airport of the Department's choice within the greater Los Angeles area. Automobile rental will be a standard compact. Lodging facilities will be determined by the Department.

(5) Failure to give written notice prior to doing work will require the removal and replacement of the work without additional cost to the Department if the Engineer cannot fully inspect all parts of the work to determine whether or not the work complies with these specifications. Furnish the Engineer with facilities, samples, information, and proper access authority for inspection and tests.

d. Before offering a lot for inspection, the Contractor shall eliminate any portion which in the Contractor's opinion is defective or does not meet the requirements of the specifications.

e. **Re-Inspection Expenses:** The Department will assess the Contractor for additional expenses incurred by the Department as a result of the Contractor incorrectly notifying the Engineer that material or equipment was ready for inspection or testing, or if equipment does not pass inspection or testing and must be re-inspected. If re-inspection is required due to the Contractor's failure to comply with any portion of these specifications, the Contractor shall pay to the Department, or the Department may deduct from any moneys due the Contractor, a sum of $100.00 per hour for the Engineer's time to re-inspect, including travel time to and from the testing location, plus transportation, meals, parking, and lodging costs to and from the testing location.

The fact that the materials or equipment have been successfully inspected, tested, and accepted by the Engineer shall not relieve the Contractor of responsibility in the case of later discovery of flaws or defects or other failure to comply with these specifications.

f. The Contractor shall notify the Stores Superintendent, Department of Water and Power, 433 East Temple Street, Los Angeles, California 90012, Telephone Number (213) 367-6800 not less than 5 working days prior to the start of manufacture. Should the Contract Administrator or Engineer elect to waive the right of inspection, the Contract Administrator or Engineer will promptly inform the Contractor.

18. **Hydrostatic Tests:**

a. Each valve shall be tested hydrostatically at the specified working water pressure of 250 psi and at the full hydrostatic test pressure of 500 psi.

b. The working water pressure shall be applied through bulkheads alternately to each end of the closed gate with the opposite end open for inspection. There shall be no leakage through the metal, seals, or flanged joints. The leakage past the seat during each alternate test shall not exceed a rate of zero fluid ounce per hour per inch of nominal valve size.

c. The hydrostatic test pressure shall be applied through one of the bulkheads, when both ends are bulkheaded, and the gate in the open position. There shall be no leakage through the metal, seals, or flanged joints and no permanent deformation of the casting.

d. For each mode of testing, the pressure shall be held for a minimum of one minute.

19. Test Reports: The Contractor shall furnish the Department 3 certified copies of all test reports covering results of all tests performed. All the valves shall be tested per Article 18 of this Division and test results shall be submitted to the Contract Administrator or Department personnel specified by the Contract Administrator. All test reports shall be accompanied by a letter of transmittal to the Contract Administrator or Department personnel specified by the Contract Administrator.

20. Delivery: During delivery, rubber wedges shall be protected from the elements. Flanges shall be covered with plywood or suitable material such as shrink wraps to protect from damage during transport. Valves shall arrive in pallets. All valves shall lie horizontally on the pallet. Wedges shall be perpendicular to the floor of the pallet. When multiple valves are delivered with multiple layers of valves on top of each other, plywood shall separate the layers of valves. The last layer of valves shall have plywood on top covering all the valves of the last layer. All equipment shall be delivered by truck and shall be capable of being unloaded from 3 sides of the truck bed with a forklift loader or from above with an overhead crane. Trucks with enclosed beds shall not be used.

21. **Submittal Drawings/ Specifications**: The valves furnished shall match the dimensions, tolerances, and materials posted on the submittal drawings and specifications at all times.

END OF DIVISION

ANSELMO G. COLLINS
Acting Director of Supply Chain Services

S-1013

DEPARTMENT OF WATER & POWER
OF THE CITY OF LOS ANGELES

INFORMAL SPECIFICATIONS
FOR

MECHANICAL COUPLINGS
INSULATING AND NON-INSULATING
(14 – INCH AND LARGER)

• • • •

PACKAGING continued:
The gaskets shall be packaged and sealed in a single container for each coupling.

The epoxy coating shall be covered with paper and other suitable material for protection against damage during shipment and handling.

MILL TEST REPORTS:
Certified mill test reports shall be submitted verifying the chemical composition and physical characteristics of the steel used in making the couplings upon request by the Department.

INSPECTION:
All couplings will be inspected. Couplings received in a damaged, rusty, or corroded condition will be returned to the Contractor for repair or replacement.

TESTING:
Each coupling shall provide a leak proof joint at the manufacturer's stated water-working pressure with a maximum pipe deflection of 1-½ degrees.

DETAILED REQUIREMENTS

MIDDLE RING:
The middle ring shall be made from either seamless steel tubing or rolled from steel plate and joined by butt-welding. The steel used for the middle ring shall have a minimum yield point of 36,000 psi.

The middle ring shall have a true circular cross-section, be flared at both ends for the gaskets, and have a bellowed portion between the flared ends to allow deflection of the joints. The middle ring shall be cold expanded beyond the yield point to a minimum increase in diameter of one-percent. There shall be no pipe stop.

FOLLOWERS RING:
The follower rings shall be either rolled from a special-contour steel section or joined by butt-welding, or hot-formed from steel plate. The steel used for the follower rings shall have a minimum yield point of 45,000 psi.

The follower rings shall have an outer rim to provide rigidity for maintaining uniform pressure against the gasket, and a solid-formed, right-angled, gasket recess to completely confine the gasket. The follower rings shall be cold expanded beyond the yield point to a minimum increase in diameter of one percent.

BOLTS:
The bolts shall be steel, either track head or carriage type, having 11/16-inch rolled threads with a shank diameter not less than 5/8-inch. The bolts shall be furnished with heavy hexagonal nuts.

The steel used for the bolts and nuts shall have a minimum tensile strength of 60,000 psi and a minimum yield point of 40,000 psi, with an elongation of not less than 25 percent in two inches.

GASKETS AND INSULATING SLEEVES:
The gaskets shall be wedge-shaped to provide a compression seal against the pipe as the bolts are tightened. The gaskets shall be made of a rubber compound with a high resistance to tearing, compression setting, and aging due to normal service in cold potable water. The rubber compound shall have a Durometer Hardness number between 70 and 80.

Insulating couplings shall have an insulation sleeve and an apron. The insulating sleeve and apron shall be made of a rubber compound having a thickness between 1/16-inch and 1/8-inch, and a durometer hardness number between 70 and 80. The sleeve and apron shall be the same thickness and shall extend from the pipe 3-inches beyond the outside of the follower rings. The insulating sleeve shall cover the edge of one pipe end.

The gaskets used with the insulating sleeve and apron shall either fit over or be apart of the sleeve and apron.

PAINTING:
The follower rings shall be shop painted with a protective base coating fully bounded to the metal surface and fully compatible with field coats of coal tar or asphalt enamels. Or painted the same as the middle ring. The metal surfaces shall be clean, dry, and free from grease before painting.

EPOXY COATING:

A. All ferrous surfaces of the middle ring be sandblasted or grit-blasted in accordance with Steel Structure Painting Council Specifications No. SSPC-SP5 for White Metal Blast Cleaning. Shot-blasting methods shall not be used. Before sandblasting, all projections and objectionable irregularities shall be carefully removed, all sharp edges and corners shall be ground smooth, and all oil and grease shall be removed by the use of an effective solvent. After sandblasting all debris of the sandblasting process shall be removed from the surfaces to be coated.

B. The middle ring coating shall immediately follow the sand-blasting and shall be one of the following epoxy coating systems:

1. Liquid catalyst-cure epoxies containing no solvents and requiring no heat curing.

    a. Wisconsin Protective Coating Company, Plasite 9060-ETP Brushable.
    b. Soc-Co Plastic Coating Company, Keysite 740, Brushable.
    c. Minnesota Mining and Manufacturing Company, Scotchkote 302.

2. Powder, fusion bonded epoxies, thermosetting.

    a. Minnesota Mining and Manufacturing Company, Scotchkote 134, Spray Application.
    b. Minnesota Mining and Manufacturing Company, Scotchkote 203, Fluid Bed Application.
    c. Minnesota Mining and Manufacturing Company, Scotchkote 206N Electrostatic Application.

C. The coating shall be applied in accordance with the manufacturer's printed instructions and shall have a dry-film thickness of not less than 10 mils nor more than 20 mils. The coating shall be applied to all stationary interior ferrous surfaces including all interior opening in the valve body. Coating shall not be applied to the gasket surfaces of the end flanges. After the coating is completely cured, the coated surfaces shall be tested for porosity, holidays, and pinholes, using holiday detector set at 1800 volts. All holidays or irregularities shall be repaired and the coating again tested.
D. Bolts made of Corten Steel shall not be coated, but bolts made of mild steel may be zinc coated.

GUARANTEE:
The Contractor shall guarantee for a period of one year after delivery of the couplings that all equipment, materials, and workmanship shall be free from defects. He shall repair or replace all such defective equipment, materials, or workmanship. F.O.B. Los Angeles, California.

(END OF SPECIFICATIONS)

DEPT. CODE				MIDDLE RING THICKNESS x LENGTH
13-20-177	(I)	14”	OD	5/16” X 5”
13-22-177	(N-I)	16”	OD	5/16” X 7”
13-22-178	(I)	16”	OD	5/16” X 7”
13-24-177	(N-I)	20”	OD	3/8” X 7”
13-24-178	(I)	20”	OD	3/8” X 7”
13-26-177	(N-I)	24”	OD	3/8” X 7”
13-26-178	(I)	24”	OD	3/8” X 7”
13-28-175	(N-I)	30-3/4”	OD	3/8” X 7”
13-28-176	(I)	30-3/4”	OD	3/8” X 7”
13-28-177	(N-I)	30”	OD	3/8” X 7”
13-28-178	(I)	30”	OD	3/8” X 7”
13-31-176	(I)	36-3/4”	OD	3/8” X 7”
13-31-177	(N-I)	36”	OD	3/8” X 7”
13-31-178	(I)	36”	OD	3/8” X 7”
13-33-178	(I)	42”	OD	3/8” X 7”

REVISED 4/2003

S-1015

DEPARTMENT OF WATER & POWER
OF THE CITY OF LOS ANGELES

INFORMAL SPECIFICATIONS
FOR

MECHANICAL COUPLINGS
INSULATING AND NON-INSULATING
(12 – INCH AND SMALLER)

• • • •

PACKAGING continued:
The gaskets shall be packaged and sealed in a single container for each coupling.

The epoxy coating shall be covered with paper and other suitable material for protection against damage during shipment and handling.

MILL TEST REPORTS:
Certified mill test reports shall be submitted verifying the chemical composition and physical characteristics of the steel used in making the couplings upon request by the Department.

INSPECTION:
All couplings will be inspected. Couplings received in a damaged, rusty, or corroded condition will be returned to the Contractor for repair or replacement.

TESTING:
Each coupling shall provide a leak proof joint under a hydrostatic test pressure of 1,000 psi with a maximum pipe deflection of 1 ½ degrees.

DETAILED REQUIREMENTS

MIDDLE RING:
The middle ring shall be made from either seamless steel tubing, pipe, or rolled from steel from steel plate and joined by butt-welding. The steel used for the middle ring shall have a minimum yield point of 35,000 psi.

The middle ring shall have a true circular cross-section, be flared at both ends for the gaskets, and have a bellowed portion between the flared ends to allow deflection of the joints. There shall be no pipe stop.

FOLLOWERS RING:
The follower rings may be either rolled from a special-contour steel section and jointned by butt welding, or hot-formed from steel plate or either malleable ASTM A-197 or ductile iron ASTM A-536. The steel or iron used for the follower rings shall have a minimum yield point of 30,000 psi.

The follower rings shall have an outer rim to provide rigidity for maintaining uniform pressure against the gasket, and a solid-formed, right-angled, gasket recess to completely confine the gasket.

BOLTS:
The bolts shall be steel, either track head or carriage type, having 11/16-inch rolled threads with a shank diameter not less than 5/8-inch. Exception 4” couplings may have a shank diameter of not less than ½ inch. The bolts shall be furnished with heavy hexagonal nuts.

The steel used for the bolts and nuts shall have a minimum tensile strength of 60,000 psi and a minimum yield point of 40,000 psi, with an elongation of not less than 25 percent in two inches.

GASKETS AND INSULATING SLEEVES:
The gaskets shall be wedge-shaped to provide a compression seal against the pipe as the bolts are tightened. The gaskets shall be made of a rubber compound with a high resistance to tearing, compression setting, and aging due to normal service in cold potable water. The rubber compound shall have a Durometer Hardness number between 70 and 80.

Insulating couplings shall have an insulation sleeve and an apron. The insulating sleeve and apron shall be made of a rubber compound having a thickness between 1/16-inch and 1/8-inch, and a durometer hardness number between 70 and 80. The sleeve and apron shall be the same thickness and shall extend from the pipe 3-inches beyond the outside of the follower rings. The insulating sleeve shall cover the edge of one pipe end.

The gaskets used with the insulating sleeve and apron shall either fit over or be apart of the sleeve and apron.

EPOXY COATING:

A. All ferrous surfaces of the middle ring shall be sandblasted or grit-blasted in accordance with Steel Structure Painting Council Specifications No. SSPC-SP5 for White Metal Blast Cleaning. Shot-blasting methods shall not be used. Before sandblasting, all projections and objectionable irregularities shall be carefully removed, all sharp edges and corners shall be ground smooth, and all oil and grease shall be removed by the use of an effective solvent. After sandblasting all debris of the sandblasting process shall be removed from the surfaces to be coated.

D. The interior coating shall immediately follow the sand-blasting and shall be one of

the following epoxy coating systems:

1. Liquid catalyst-cure epoxies containing no solvents and requiring no heat curing.

    a. Wisconsin Protective Coating Company, Plasite 9060-ETP Brushable.
    b. Soc-Co Plastic Coating Company, Keysite 740, Brushable.
    c. Minnesota Mining and Manufacturing Company, Scotchkote 302.

2. Powder, fusion bonded epoxies, thermosetting.

    a. Minnesota Mining and Manufacturing Company, Scotchkote 134, Spray Application.
    b. Minnesota Mining and Manufacturing Company, Scotchkote 203, Fluid Bed Application.
    c. Minnesota Mining and Manufacturing Company, Scotchkote 206N Electrostatic Application.

D. The coating shall be applied in accordance with the manufacturers printed instructions and shall have a dry-film thickness of not less than 10 mils nor more than 20 mils. The coating shall be applied to all stationary interior ferrous surfaces including all interior openings in the valve body. Coating shall not be applied to the gasket surfaces of the end flanges. After the coating is completely cured, the coated surfaces shall be tested for porosity, holidays, and pinholes, using holiday detector set at 1800 volts. All holidays or irregularities shall be repaired and the coating again tested.

D. Bolts made of Corten Steel shall not be coated, but bolts made of mild steel may be zinc coated.

PAINTING

A. With liquid catalyst-cure epoxies; the follower rings shall be shop painted with a protective base coating fully bonded to the metal surface and fully compatible with field coats of coal-tar or asphalt enamels. The metal surfaces shall be clean, dry and free from grease before painting; or the follower rings may be painted with either type epoxy.
B. With power, fusion bonded epoxies; with the middle ring interior and exterior epoxy coated, the follower rings shall be shop painted with a protective base coating fully bonded to the metal surface and fully compatible with field coats of coat-tar or asphalt enamels. The metal surfaces shall be clean, dry and free from grease before painting; or follower rings may also be coated with either type epoxy.

GUARANTEE

The contractor shall guarantee for a period of one year after delivery of the coupling that all equipment, materials and workmanship shall be of the coupling that all equipment, materials and workmanship shall be free from defects. He shall repair or replace all such defective equipment, materials or workmanship. FOB Los Angeles, California.

(END OF SPECIFICATIONS)

DEPT. CODE

13-13-175	(N-I)	4”	STD
13-13-176	(I)	4”	STD
13-13-177	(N-I)	46”	OD
13-16-175	(N-I)	6”	STD
13-16-176	(I)	6”	STD
13-16-177	(N-I)	6”	OD
13-17-175	(N-I)	8”	STD
13-17-177	(N-I)	8”	OD
13-18-175	(N-I)	10”	STD
13-19-175	(N-I)	12”	STD
13-19-176	(I)	12”	STD

REVISED 4/2003

S-1025

DEPARTMENT OF WATER AND POWER
OF THE CITY OF LOS ANGELES

INFORMAL SPECIFICATIONS
FOR
MECHANICAL TRANSITION COMPRESSION-TYPE COUPLINGS
(FOR 2-INCH THROUGH 16-INCH PIPE SIZE)

SCOPE:

These specifications set forth the requirements for cast mechanical transition compression-type couplings for joining ductile-iron, cast-iron, or steel pipe to ductile-iron, cast-iron, or asbestos-cement pipe having a range of outside diameters, middle ring lengths, as specified on the "Request for Bids" form.

GENERAL:

Each coupling shall comply with the requirements of ANSI/AWWA C219 and certified to ANSI/NSF61-G for mechanical transition compression-type coupling for plain end pipe, and the provisions of this specification

Each coupling shall consist of the following:

1. One center sleeve shall be made from ductile iron per ASTM A536 with bevel ends having a smooth inside bevel to form a uniform gasket seating surface, fusion bonded epoxy coated.

2. 2 follower rings shall be made from ductile iron per ASTM A536. For couplings larger than 12-inches end rings can be made of steel, fusion bonded epoxy coated.

3. Complete set of bolts, nuts and washers shall be made from 316 grade stainless steel.

4. Gaskets shall be EPDM, certified to ANSI/NSF61-G.

INSTRUCTION TO BIDDERS

DELIVERY DATE AND LOCATION:

The delivery date and location shall be as specified on the "Request for Bids" form.

BIDDER'S SPECIFICATIONS:

A pdf copy of the bidder’s specifications shall be submitted electronically using the electronic-Request-Solicit-Procedure (eRSP) online purchasing system. The specifications shall state the

material of major parts, and shall contain detailed descriptions and general drawings of the proposed couplings.

SPECIAL CONDITIONS

PACKAGING:

Each coupling shall be delivered with the center sleeve and follower rings completely assembled with gaskets in place and with all tie bolts and nuts to hold the coupling secure during shipment.

All epoxy coated surfaces shall be covered with paper or other suitable material for protection against damage during shipment and handling.

Plugs shall be covered with paper and either taped or attached to end caps so as to have both pieces together at all times. Plug shall not be threaded onto end cap.

INSPECTION:

All couplings will be inspected by an LADWP inspector at time of delivery to LADWP. Couplings received in a damaged, rusty, corroded condition, or with incorrect epoxy coating mil thickness will be returned to the Contractor for repair or replacement.

TESTING:

Each coupling shall provide a leak proof joint under a hydrostatic test pressure of 300 psi with a maximum pipe deflection of 1-1/2 degrees, after tightening to the manufacturer's recommended torque.

DETAILED REQUIREMENTS

SIZE RANGE:
The couplings shall be capable of providing a leak-free connection between ductile-iron, cast-iron, steel, and asbestos-cement pipes with the following size ranges:

	COUPLING SIZE (INCHES)	PIPE O.D. SIZE RANGE EACH END OF COUPLING (INCHES)
	CLASS AB-CD, CAST IRON	DUCTILE-IRON OR CAST IRON
Type 1		
	2	2.34 - 2.63
	4	4.80 - 5.00
	6	6.90 - 7.10
	8	9.05 - 9.30

12	13.20	-	13.50
16	17.40	-	17.80

Type 2	AC-DI	ASBESTOS-CEMENT			DUCTILE-IRON OR CAST IRON		
	4	5.11	-	5.45	4.80	-	5.00
	6	7.25	-	7.65	6.90	-	7.10
	8	9.46	-	9.85	9.05	-	9.30
	12	13.9	-	14.20	14.21	-	14.40

Type 3	AC-Stl	ASBESTOS-CEMENT			STEEL *
	4	5.11	-	5.45	4.50
	6	7.25	-	7.65	6.63
	8	9.46	-	9.85	8.63
	12	13.90	-	14.20	12.75
					* plus or minus 1/32

Type 4	DI-Stl	DUCTILE-IRON OR CAST-IRON			STEEL*
	4	4.80	-	5.00	4.50
	6	6.90	-	7.10	6.63
	8	9.05	-	9.30	8.63
	12	13.20	-	13.50	12.75
	16	17.40	-	17.80	16.00
					* plus or minus 1/32

CENTER SLEEVE:

The center sleeve or ring shall be cast from ductile iron in accordance with ASTM A536, minimum Grade 65-45-12. For couplings larger than 12-inches, center sleeve can be made of steel in accordance with ANSI/AWWA C219.

The center sleeve shall have a true circular cross section, with beveled ends for the rubber gaskets.

The center sleeve shall have epoxy lining and coating. The epoxy shall be in accordance with these specifications. The center ring shall be free of pits or parting lines.

FOLLOWER RINGS:

Two interchangeable follower rings shall be cast from ductile iron in accordance with ASTM A536, minimum Grade 65-45-12. All interior and exterior surfaces of the follower rings shall be epoxy coated. The follower rings shall be free of pits, distortions and parting lines with smooth surfaces in the gasket recess. For couplings larger than 12-inches, follower rings can be made of steel in accordance with ANSI/AWWA C219.

BOLTS AND NUTS:

Stainless steel bolts shall be carriage or track head, or oval neck track bolts, with rolled threads, conforming to the requirements of ASTM A193M, Grade B8M or B8MA (AISI Type 316), 5/8" nominal size, and shall be of sufficient length to have a minimum of three threads exposed after the nut is tightened to the recommended torque. Stainless steel nuts shall conform to the requirements of ASTM A194M, Grade 8M or 8MA (AISI type 316), 5/8" nominal size, heavy hex series. Nuts shall be teflon or nylon coated, or equal.

GASKETS:

Gasket material shall be EPDM certified to ANSI/NSF61-G. The gaskets shall be wedge-shaped to provide a compression seal against the pipe as the bolts are tightened.

END-CAPS:

End Caps shall be made from ductile iron meeting the requirements of ASTM A536 minimum Grade 65-45-12 and shall be coated per the EPOXY COATING section of these specifications. The end cap shall have a 2 inch NPT internal (female) threaded outlet meeting the requirement of ANSI/ASME B1.20.1. Threaded section shall not be coated.

A. **PLUGS**

Plugs shall be made from ductile iron meeting the requirements of ASTM A536 minimum Grade 65-45-12. All plugs shall be cored and squared head meeting the requirements of ASME B16.14 Plugs shall be coated per the EPOXY COATING section of these specifications. Ductile iron threaded section shall not be epoxy coated. Threads shall conform to ANSI/ASME B1.20.1. Plugs shall be certified to ANSI/NSF61-G.

EPOXY COATING:

A. The coating shall be applied in accordance with the manufacturer's printed instructions and shall have a dry-film thickness of not less than 12 mils and not more than 24 mils. Coating shall be applied to the entire surface of the center sleeve and follower rings per ANSI/AWWA C-213 and C-550. After the coating is completely cured, the coated surfaces shall be free of porosity, holidays, and pinholes. All holidays or irregularities shall be repaired prior to shipping to LADWP.

B. The color of the follower rings shall be colored coded to correspond to the type of pipe to be connected.

C. Coating shall be one part, heat cured, thermosetting, and fusion bonded epoxy designed for superior corrosion protection of steel and cast products in water and wastewater applications. The epoxy shall be applied to preheated metal products as a dry powder which melts and cures to a uniform coating. The coating must pass a rebar bendability test consisting of coated #5 rebar bent 180 degrees around a 3.13-inch diameter mandrel at 20-degrees F resulting in no cracks or tears in the coating. The coating must meet all applicable standards per ANSI/AWWA C-213 and C-550.

ANSI/NSF 61-G CERTIFICATION:

Each bidder shall submit as part of their bid response a written certification from an ANSI certified laboratory that their final product is ANSI/NSF 61-G certified. Failure to provide proof of ANSI/NSF 61-G certification as part of the bid shall result in the bid being deemed non responsive to these specifications. A pdf copy of the certification shall be submitted electronically using the eRSP online purchasing system at the time of electronic bid submittal.

MARKINGS:

Each coupling shall be clearly marked with the following information:

Center sleeve: manufacturer's name, series, model number, nominal pipe size, bolt and nut material, finish type, follower rings pipe OD range, gaskets pipe OD range, gasket material, ANSI/NSF61-G identification.

GUARANTEE:

The contractor shall guarantee for a period of one year after delivery of the coupling that all equipment, materials, and workmanship shall be free from defects. All such defective equipment, materials, or workmanship f.o.b. Los Angeles, California.

(END OF SPECIFICATIONS)

MECHANICAL TRANSITION COMPRESSION-TYPE COUPLINGS
(FOR 2-INCH THROUGH 16-INCH PIPE)

REVISED 9/31_Jvanegas

LOS ANGELES DEPARTMENT OF WATER AND POWER

SPECIFICATIONS
For
PACKAGED MAGNESIUM ANODES

April, 2011

1. **Scope:** Provide individually wrapped and sealed, installation ready, magnesium anode/soil packages, for burial with steel water mains to provide cathodic protection. The anode/soil package shall consist of one magnesium anode, embedded in a special backfill material, tightly packed in a cotton fabric bag, with an electrical connecting wire for attachment to the pipe. Anode/soil packages shall be furnished in protective packaging, as specified.

2. **References:**

   a. ASTM A853, Standard Specification for Steel Wire, Carbon, for General Use.

   b. ASTM B3, Standard Specification for Soft or Annealed Copper Wire.

   c ASTM B49, Standard Specification for Copper Rod Drawing Stock for Electrical Purposes.

   d. ASTM B843, Standard Specification for Magnesium Alloy Anodes for Cathodic Protection.

   e. ASTM D1248, Standard Specification for Polyethylene Extrusion Materials for Wire and Cable.

   f. ASTM G97, Standard Test Method for Laboratory Evaluation of Magnesium Test Specimens for Underground Applications.

3. **Magnesium Anode:**

   a. The active anode chemical composition shall comply with ASTM B843 Standard Specification for Grade "M1C" high potential magnesium anodes.

   b. The anode shall be a horizontally cast, D-shaped casting, free of large voids and shall have a smooth and consistent finish.

   c. The anode potential and current efficiency shall be in accordance with ASTM G97 Standard Test Method.

   d. The anode weight shall not be less than 32 pounds.

e. A steel core shall be cast into the magnesium anode, consisting of a 20-gauge, 5/8-inch wide, flat galvanized steel bar with a minimum length of 13 inches, aligned on the longitudinal centroidal axis of the casting.

f. On one end, the anode shall be cast with a 1-inch deep, 2-inch diameter recess, centered on the core. The recess shall taper inward to 1-inch diameter at its bottom, where the steel core shall protrude into the recess not less than 1/2-inch and not more than 7/8-inch.

4. **Anode Connection Wire:**

a. Anodes shall be furnished with a 10-foot long electrical wire lead for electrical connection of the anode to steel pipe. The wire shall be suitable for direct burial, and shall be as follows:

(1) **Conductor:** 12 AWG solid copper conductor, in accordance with ASTM B3, with chemical composition UNS C11000 or UNS C11040, and Electrolytic Tough Pitch (ETP) type in accordance with ASTM B 49.

(2) **Insulation:** High molecular weight, High Density Polyethylene (HDMW-PE), in accordance with ASTM D1248, Special Grades - Weather Resistant - Black, Class C, Type III or IV, Grades W8 or W9. The insulation shall be free of any holidays or breaks.

b. The wire shall be silver soldered to the clean, fluxed flat surface of the anode core. This connection shall be sealed with an asphalt enamel or coal tar enamel compound such that no bare metal is exposed and the recessed cavity is completely filled.

c. The wire and its soldered connection to the anode shall be capable of supporting the complete weight of the packaged magnesium anode without elongation of the wire from the anode.

5. **Anode Backfill Material:** Backfill for the magnesium anode shall be a prepared dry, finely powered and uniformly mixed chemical composition of 75 percent Gypsum, 20 percent Bentonite, and 5 percent Sodium Sulphate.

6. **Packaging Materials:**

a. **Cotton Bags:** The cotton bags shall be made of 100 percent unbleached cotton fabric and shall have no chemical treatment that would restrict water absorption. The bag shall have a rounded bottom and opened at the other end. The sides shall be sewn with a fold over seam for strength.

b. **Plastic Bags:** Plastic bags shall be made of clear polyethylene sheeting, not less than 3 mil thickness and be sized to accommodate the contents with sufficient additional length necessary to achieve a moisture-tight closure.

c. **Burlap Sacks:** Burlap sacks shall be new and unused, unmarked, and made with fabric weighing not less than 9 ounces per square yard.

d. **Tie Wires:** Loop-ended tie wires shall be used to securely close the cotton bags, plastic bags, and burlap sacks. Tie wires shall be 14 AWG, soft annealed wire meeting the requirements of ASTM A853.

7. **Anode/Soil Packages:**

a. The backfill material and magnesium anode shall be placed in a cotton bag in such a manner that results in the anode being centered in and surrounded by a uniform thickness of the backfill material, packed tightly in the bag.

b. With the anode connection wire protruding, the cotton bag shall be tightly closed around the wire and secured with a tie wire.

c. The weight of the anode/soil package shall not be less than 70 pounds, nor measure shorter than 28 inches in length.

d. The anode connecting wire shall be neatly coiled up and secured with a nylon cable tie to the tied end of the cotton bag.

8. **Protective Packaging:** Anode/soil packages shall be furnished with the following additional outer packaging to provide a durable barrier to protect the backfill material from atmospheric moisture:

a. The anode/soil package shall be moisture sealed by enclosing the package in a plastic bag with trapped air kept minimal, and securing with a tie wire to provide a moisture-tight seal.

b. To protect the moisture barrier from damage during transport and handling, the sealed plastic bag package shall be enclosed in a burlap sack and secured with a tie wire.

c. The completed packages shall be delivered on pallets of 25 each, secured to the pallets by clear polyethylene stretch wrap.

9. **Compliance Testing:** No later than 14 calendar days after award of the contract, a report of the results of testing performed on randomly selected anodes from a production run in accordance with ASTM B843 and ASTM G97 by a certified test laboratory, shall be submitted to the LADWP Corrosion Engineering Group.

Address: LADWP
Corrosion Engineering
433 E. Temple St., Bldg #2, Room 22
Los Angeles, CA 90012

10. **Inspection:** All material received under these specifications will be inspected at the Department's specified receiving points. The entire lot or portions thereof will be rejected if the materials do not comply with the requirements of these specifications.

DEPARTMENT MATERIAL CODE
63-85-454

REVISED: 04/07/2011
BY: SFI/KJB

S-1032

DEPARTMENT OF WATER & POWER
OF THE CITY OF LOS ANGELES

INFORMAL SPECIFICATIONS
FOR

FABRICATION OF INSULATING JOINT ASSEMBLIES

• • • •

C. Definitions continued:

4.) Insulating Gasket Set: An insulating gasket and insulating bolt sleeves and washers used to electrically isolate two pieces of pipe from each other.

5.) Nipple: A section of steel pipe 12 to 18 inches long depending on the pipe diameter and IJ Type.

6.) Mastic: A dielectric material used to cover and fill voids between heat shrinkable sleeve and the pipe, flange and bolts.

7.) Shielded Metal Arc Welding: An arc-welding process wherein coalescence is produced by heating with an electric arc between a covered metal electrode and the work. Shielding is obtained from decomposition of the electrode covering. Pressure is not used and filler metal is obtained from the electrode.

8.) Submerged Arc Welding: An arc-welding process wherein coalescence is produced by heating with an electric arc or arcs between a bare metal electrode or electrodes and the work. The welding is shielded by a blanket of granular, fusible material on the work. Pressure is not used and filler metal is obtained from the electrode or from a supplementary welding rod.

9.) Weld Neck: A unit made up of full-face slip-on flange double fillet welded to a nipple.

D. Order of Frabrication and Assembly:

1.) Cut pipe into nipple lengths.
2.) Weld flanges to nipples.
3.) Hold for weld inspection.
4.) Flanges flat-faced, serrated and edges beveled (see DWG A9407)
5.) Sandblast units.
6.) Hold for inspection.
7.) Coat with fused thermosetting epoxy powder coating.
8.) Apply Asphalt-Primer on outside bare Steel Surfaces leaving 4-inch holdback.
9.) Apply Cement-Mortar Lining.
10.)Hold for inspection.
11.)Assemble two flange nipple units (weld necks) using the insulating gasket, bolt sleeves, washers, etc. Reference DWG A9367.
12.)Check Resistance.
13.)Encapsulate the assembly leaving a minimum 4-inch holdbacks.
14.)Apply epoxy putty inside surface of the IJ after the putty has cured leaving 4-inches holdback from end of pipe.
15.)Epoxy-coat the inside surface of the IJ after the putty has cured leaving 4-inches holdback from end of pipe.

Fabrication and assembly shall be in accordance with drawings A9367 redrawn, A9407, A9407, A9417, A9148 and A9149 except 4 and 6 inch IJ's shall have nipples 12-inches instead of 9-inches.

E. Material: All material shall be of quality specified. Physical defects that cannot be corrected so as to restore the designed strength shall be rejected.

F. Pipe: The steel pipe used to make the nipples shall be made of welded steel pipe ASTM A53, Type E, Grade A, except the wall thickness shall have a maximum allowable variation of –3% and +2% of the specified thickness. The wall thickness shall be of the standard weight class for diameter 4-through 12-inch.

G. Flanges: Flanges shall be the full-face slip-on type and shall meet the requirements ASTM A105.

After being double fillet welded to the pipe nipple, the flanges shall be flat-faced, serrated, and machined in accordance with Drawing A9407.

The flanges for Type II It's shall have boltholes drilled in accordance with ANSI B16.5 - 300 psi.

Flanges for Type I E IJ's shall have bolt holes drilled in accordance with ANSI B16.5 – 300 psi.

H. Nipples: The flanged nipple shall have the plain end of the nipple beveled for butt Welding.

I. Bolts for Flanges: Bolts (cap screws) for flanges shall meet the requirements of section 6.9 of ANSI B16.5.

J. Gaskets: Gaskets shall be full face nonconductive, cut to fit ANSI B16.5 slip-on welded flange. Materials for all gaskets shall be premium grade, red rubber, 1/8-inch thick "Ankorite" green label. Style 415, nonconductive, shore durometer of 75+5, rated to withstands 200 pounds of steam pressure. Gaskets shall be marked for identification.

Note: Garlock 22 does not meet these requirements.

K. Bolt Insulating Sleeves and Washers: The bolts shall be isolated from the flanges Using full length spiral-wound mylar insulating sleeves with two companion fabric reinforced insulating phenolic washers and tow steel back-up washers per sleeve.

The mylar sleeves shall have a dielectric strength of 4000 volts/mil.

The phenolic washers shall have a dielectric strength of 500 volts/mil. And compressive strength of 26000 psi.

LINING AND COATING:

A. Fused Thermosetting Epoxy Powder Coating: The requirements for coating steel flanged nipples 4-through 12-inch with 9- or 18-inch nipples and 4-through 12-inch cast iron or ductile iron flange to bell adaptors shall be in accordance with Drawing A9407 and the following:
   1.) Drawing A9407 for fusion-bonded epoxy coating of the flanged nipples and flange to bell adaptors is a part of these specifications.
   2.) Surface Preparation: The flange, inside the bolt holes and a two-inch section behind the flange, both, surfaces inside and outside then nipple or flanged to bell adaptor shall be sandblasted to a near white metal in accordance with Steel Structures Painting Council surface Preparation Specifications SSPC-SP10 or SNACE No. 2 near white finish. The entire inside surface of the adaptors shall be sandblasted. The flanges or adaptors shall then be heated to 400 F + 20 F.
   3.) Coating: Immediately following removal from the preheating oven the sandblasted surface shall be coated with an electrostatically applied thermosetting epoxy powder, “Scotchkote 134” to a minimum thickness of 10 mils. Following the application of coating all units shall be post cured at 400 F + 20 F for a minimum of 20 minutes.
   4.) Testing: All coated nipples or adaptors shall be holiday tested with a 67-1/2 volt Tinker and Razor holiday detector. All holidays shall be repaired and the finished product shall be holiday free. The coating thickness shall be verified with a Mikrotest Magnetic thickness gauge. A Department inspector may witness these tests.
   5.) Handling: Finished and tested flanges or adaptors shall be palletized in such a way that they can be easily loaded on trucks by the contractor and will not fall or bump together during transportation. The pallet shall have a pad between it and the coated nipples and adaptors.

B. Cement Mortar Lining: After the fused thermosetting epoxy powder coating has been applied the interior pipe surfaces shall be cement-mortar lined in accordance with AWWA C205, with the following
   1.) Lining: The lining shall be beveled at the plain end of the pipe and also beveled at the flange end in accordance with Drawing A9367 redrawn.
   2.) Cement: Cement shall meet the requirements of the Department’s Standard Specification G331, as last revised, for Portland Cement, Type II.

C. Epoxy Putty and Coating:
   1.) Epoxy putty shall be Socco’s grey “Keysite” No. 742.
   2.) Epoxy coating shall be Socco’s Keysite” No. 740.

C. Epoxy Putty and Coating continued:

3.) Application: Apply and cure in accordance with Drawing A9367 and manufacturer's written instructions.

D. Encapsulation: The insulating joint assembly shall have the flanges, including the bolt heads and nuts encapsulated as shown on drawing A9419.

The edge of the flanges shall be tape coated with Tape coat CT 10/40 W tape system.

E. Encapsulate Using One of the Following Systems:

1.) A dielectric mastic shall be placed around the bolts and enough excess used to fill all void created by the heat shrink covering. Apply the Raychem's Shrink Fit Sleeve No. 70090/0, 32250 leaving minimum holdbacks of four inches.

2.) Band a form around the flanges so the form extends beyond the bolt heads, the nuts, and bolt ends. Fill all the hollows created by this form with AWWA C203 coal tar enamel. The edge of the flanges shall be tape coated as in 3.0.

F. Arc Welding Equipment.

1.) Machines: Generators and transformers shall be designed expressly for welding, capable of delivering substantially constant current, and be adjustable through a range ample for the requirements of the work. Generators and transformer shall be provided with devices for controlling the welding current and arc voltage and with meter syndicating the amount of each at all times.

2.) Automatic welding heads: Automatic welding heads with auxiliary handling equipment to provide control of electrode speed and welding arc shall be subject to the requirements of these specifications.

G. Filler Metal: The filler metal used in the automatic welding process shall be comparable to and compatible with the base material in its metallurgical properties and mechanical properties. Electrodes for manual welding shall meet the requirements of AWS 5.1, Classification E6010 or E70 low hydrogen series.

H. Ends of Sections: Ends of straight pipe shall have beveled ends for butt-welding.

I. Qualification for Welders and Welding Operator:

1.) All welders and welding operators shall be qualified under the applicable provisions of standard qualification procedure of the ASME Boiler and Pressure Vessel Code, Section IX, or AWS D1.1 Section 5 as last revised.

2.) The engineer will have the right at any time to call for and witness the making of test specimens by any welder in accordance with these specifications. The tests shall be at the contractor's own expense.

J. Welding Procedure Specifications: Welding procedure specifications shall be furnished to the engineer prior to the welding of the pipe. The specifications shall specify the type of plate edge preparation, welding method, arc-voltage arc-amperes, travel speed, wire size and type, flux type, and all other procedures necessary to make the weld.

K. Welding:

1.) All welds shall be made by a shielded metal arc-welding or submerged arc welding process. Where required by the engineer, inspection of the background area by the contractor shall be made by the Dye Penetrant Method and will be witnessed by the engineer.

2.) Each layer of welded metal shall be thoroughly cleaned before additional filler metal is applied to its surface. Finished joint shall be free from depressions, burrs, undercut edges, irregularities, and valleys. The inner surface of the pipe shall be free from burrs and other irregularities resulting from welding.

3.) The welding process shall produce complete fusion of base metal and filler metal, free from cracks, oxides, and gas pockets within the limits set forth under these specifications.

4.) When welding is interrupted, the weld shall be cleaned and flux redistributed before work is resumed.

Correction to Welds:

1.) Welds found deficient in dimensions, but not in quality, shall be enlarged by additional welding after thoroughly cleaning the surfaces of previously deposited metal and the adjoining plate. When subsequent work has made the weld inaccessible or has caused new conditions which would make such enlargement inadvisable, the original conditions shall be restored by removal of welds, members, or both before enlarging the deficient weld.

2.) A defective weld or a weld made contrary to the provisions of these specifications shall be removed and remade throughout its length. The defective weld shall be removed by chipping, cutting, or melting throughout its depth to clean base metal. The melting or chipping shall not extend into the base metal beyond the heat-affected zone. When more than 5 percent of the total length of original weld per pipe section is defective, the section will be rejected.

3.) Burnt metal resulting from melting shall be removed by chipping or grinding to expose clean sound metal.

4.) Overheated filler metal and overheated base metal adjoining it shall be removed and replaced by new filler metal properly applied. Plate damaged by overheating which cannot be satisfactorily repaired by filler metal shall be replaced.

5.) Repair welds shall be ground to the existing surface contours.

M. Hand Welding: Fillet welds shall fully penetrate into the corner. Cut back of the plate edges of fillet welds shall not be done. Filler metal shall be deposited in successive layers so that there will be at least as many passes as there are complete multiplies of 1/8-inch in the plate thickness.

N. Preparation of Ends of Pipe:

1.) Ends for Butt Welding: Ends of Pipe section for butt welds shall be prepared in Accordance with these specifications and as shown on the drawing.

O. Factory Inspection and Testing Insulating Joints:

1.) General:

a. Any or all tests provided herein to determine compliance with these specifications shall be made under the supervision of and have the approval of the engineer as to compliance with these specifications. The contractor shall notify the engineer in advance of the manufacture or production of materials to be furnished under this contract to enable the engineer to arrange for mill or factory inspection or testing. Materials to be tested and inspected by the engineer shall not be released for shipment until they have satisfactorily passed the engineer's inspection and test or until notice has been received from the engineer that such inspection and testing will not be required. The contractor shall also furnish to the engineer, three certified copies of all required factory and mill test reports.
Any such tests or inspections shall not relieve the contractor of obligations under the contract all material furnished. The Department will bear all expenses of final acceptance tests excepting salaries and expenses of the manufacturer's representatives during such tests.

b. The engineer shall be notified five calendar days prior to the start of fabrication including the start of any sub-contract work. IJ's shall be fabricated only when the engineer is present. The engineer may waive continuous inspection and may elect to check after certain phases are finished. The hold point shall be indicated to the contractor by the engineer.

c. The engineer will reject any or all IJ's that do not meet the requirements of these specifications.

d. The engineer shall have free access to those areas of all plants that furnish materials or perform work under these specifications.

e. The contractor shall furnish the engineer reasonable facilities and space, without charge, for inspecting, testing, and obtaining information respecting the character of material used and the progress and manner of the work.

2.) Weld Tests of Steel Pipe:

a. Tests: The test requirements shall be as follows:
All welds shall be tested by an air test or ASTM dye check test.

3.) Retest of Welds: Additional weld tests may be required should there by any indication that an unsatisfactory weld has been made. These weld tests shall be made and the results approved by the engineer as to compliance with these specifications prior to beginning another shift's production.

Retest of welds shall be performed entirely at the contractor's own expense and shall be made and approved before beginning the next shift's production in accordance with the following:

a. Should any of the weld tests take from the shift's production fail to meet any of the requirements of these specifications, one additional set of weld tests shall be made from each of the adjoining pipe sections.
b. Should any of the additional tests fail to meet the requirements of these specifications, all pipe sections of that shift's production run will be rejected.
c. If the additional tests met the requirements of these specifications the remaining pipe of the shift's production run shall be deemed acceptable. The original pipe may be reconditioned and resubmitted for inspection and additional tests shall be made on the original pipe.

4.) Inspection of the lined and Coated Insulating Joints:

a. General: The Department's engineer shall at all times have the right to inspect the work in the course of the application of the lining and coating to the insulating joints and make such test from time to time as may be deemed advisable providing no delay in production of acceptable materials or equipment is caused thereby. The contractor shall furnish, at his own expense, reasonable facilities including tools and instruments for so doing and for obtaining such information, as the engineer desires respecting the progress and manner of the work and the character of the materials used. However final inspection will be made upon receipt at the Department's specified receiving points, and if any materials or equipment do not meet the requirements of these specifications, the lot or any faulty portion thereof may be rejected.
b. Before offering a lot for inspection, the manufacturer shall eliminate any portion, which is defective or does not meet the requirements of the specifications. All expense of the initial acceptance test will be borne by the Department. The expense of subsequent tests due to failure of material or equipment have been successfully inspected, tested, and accepted by the engineer shall not relieve the contractor of responsibility in the case of later discovery of flaws or defects.
c. Coating System: Upon completion of each coating, each portion coated shall be inspected.

d. Repairs: All holiday and other defects observed or holidays detected during inspection shall be repaired.
e. The Department will recheck electrical isolation of the two halves. The electrical resistance shall be a minimum of 10 Meg OHMS.

NOTE: The parts may be dielectrically stressed to 600v/mil or maximum of 6000V.

5.) Delivery of the Cement-Mortar Lined and Coated Flanged Steel Pipe:
The transporting and handling of the lined and coated IJ parts shall be in accordance with 3.0.(6)a. and (6)b.

6.) Shipping and Handling of Lined and Coated Insulating of Joints:
a. The lined and coated IJ's shall be handled, stored and shipped by the contractor in a manner that will prevent damage to the coating, lining, and ends. They shall be hoisted by means of wide belt slings. Chains, cables, tongs, or hooks or other devices likely to cause damage shall employ sufficient dunnage, covers, padding, and banding to preserve the integrity of the pipe coating during shipment to the point of receipt.
b. Delivery of IJ's: The IJ's shall be braced and secured with shrink-wrap to prevent damage to the pipe during handling and delivery. The IJ's shall be delivered on no deposit, non-returnable pallets.
c. Finished IJ's at Delivery Destination:
1.) All IJ's that show dents, kinks, and injuries at the delivery destination will be subject to rejection. All IJ's that have been dropped from a truck or crane prior to the completion of delivery will be subject to rejection. The contractor shall replace, at the contractor's own expense, such rejected section with undamaged section or he may recondition the rejected section.
2.) IJ's rejected because of substantial damage may be reconditioned but not by hammering, if the pipe can be returned to its design strength and specified characteristics. Pipe rejected because of gauges, scars, or other minor injuries shall be recondition so as to return the pipe to its design strength and specified characteristics in a manner approved by the engineer. Where reconditioning has required removal and replacement of a weld or reshaping by rolling, the reconditioned area shall be inspected by spot radiographs or retested hydrostatically by the contractor.
3.) IJ's failing the electrical resistance requirements at the point of delivery will be rejected. The contractor shall replace or repair, at the contractor's own expense, such rejected IJ's

(END OF SPECIFICATIONS)

DEPT. CODE	DESCRIPTION	SIZE
13-13-296	BELL/NIPPLE CI/ST1	4”
13-16-296	BELL/NIPPLE CI/ST1	6”
13-17-296	BELL/NIPPLE CI/ST1	8”
13-19-296	BELL/NIPPLE CI/ST1	12”
13-63-296	BELL/NIPPLE/DI/ST1	4”
13-63-296	BELL/NIPPLE/DI/ST1	6”
13-63-296	BELL/NIPPLE/DI/ST1	8”
13-63-296	BELL/NIPPLE/DI/ST1	12”
13-63-298	NIPPLE/NIPPLE ST1	4”
13-66-298	NIPPLE/NIPPLE ST1	6”
13-67-298	NIPPLE/NIPPLE ST1	8”
13-69-298	NIPPLE/NIPPLE ST1	12”

REVISED 4/2003

DEPARTMENT OF WATER & POWER
OF THE CITY OF LOS ANGELES

INFORMAL SPECIFICATIONS
FOR

PROTECTIVE COATING OF METALLIC PRODUCTS NOT FOR DIRECT EXPOSURE TO POTABLE WATER

The following specification shall define the material and method used for coating various water works fittings not in direct contact with potable water.

It is intended that the articles to be supplied to the coater shall be clean and finished. However, if present; sand, rust, scale, dirt, grease, oil or other foreign matter shall be removed from the surface prior to coating.

Cleaned articles shall be dipped (if practical) in Koppers Tank Solution or Kopper Super Tank Solution. The Solution shall be thinned to adjust the viscosity as needed with Tank Solution Thinner (Koppers 2000). The articles shall be thoroughly coated, inside and out. After dipping, the articles shall be allowed to drain, inspected, and if the holidays or other imperfections are found in the coating; the fitting shall be reimmersed until there are no imperfections. The fitting shall then be set aside to dry. Any accumulations of surplus material in the bells or other places shall be removed by brushing or scraping. The solution shall be applied in accordance with the manufacturer's printed recommendation. The finished coating shall be not less than 3 mils (.003") dry film thickness in all places. Articles received from the coater with insufficient coating shall be returned for additional coating.

(END OF SPECIFICATIONS)

REVISED 7/88

S-1040

DEPARTMENT OF WATER & POWER
OF THE CITY OF LOS ANGELES

INFORMAL SPECIFICATIONS
FOR

FABRICATION OF STEEL FLANGED NIPPLE ASSEMBLIES

SCOPE:

These specifications cover the manufacture of steel flanged nipple assemblies. These items shall be furnished to the dimensions shown on Drawings A9233-1 or A9233-2 or A9233-3, and A9421.

GENERAL REQUIREMENTS:

A. National Standards: All ANSI, ASTM, ASME, AWWA, API, AWS, NACE, and SSPWC Standards referred to herein shall be as last revised. In case of conflict, the Department's specifications shall govern.

B. Types:
   Type I – the pressure rating for Type I flanged nipple assemblies shall be 150 pounds per square inch (psi).
   Type II – the pressure rating for Type II flanged nipple assemblies shall be 300 pounds per square inch (psi).

C. Definitions: Under these specifications, the following definitions shall apply:
   1.) Butt Weld: Butt weld is a weld whose throat lies in a plane disposed approximately 90 degrees with respect to the surfaces of at least one of the parts joined. All butt welds shall be full penetration.
   2.) Chief Engineer: The General Manager and Chief Engineer, the Assistant General Manager-Water, or the Assistant General Manager-Power, of the Department.
   3.) Contractor: The person, firm, or corporation contracting with the Department for the work required, and the legal representatives of said party or the agent appointed to act for said party in the performance of the work.
   4.) Department: The Department of Water and Power of the City of Los Angeles.
   5.) Engineer: The General Manager and Chief Engineer, or his authorized representatives acting within the limits of the duties entrusted to them.
   6.) Fillet Weld: Fillet weld is a weld approximately triangular in cross section joining two surfaces approximately at right angles to each other.
   7.) Filler Metal: Filler metal is the metal to be added in making a weld.
   8.) Flanged Nipple Assembly: A unit made up of a flat-faced steel flange butt or fillet welded to a nipple as per the attached drawings.
   9.) Fusion: Fusion is the melting together of a filler metal and base metal.

Definitions continued:

10.) Nipple: A section of steel pipe 9 to 18 inches long depending on the pipe diameter.

11.) Shielded Metal Arc Welding: An arc-welding process wherein coalescence is produced by heating with an electric arc between a covered metal electrode and the work. Shielding is obtained from decomposition of the electrode covering. Pressure is not used and filler metal is obtained from the electrode.

12.) Submerged Arc Welding: An arc-welding process wherein coalescence is produced by heating with an electric arc or arcs between a bare metal electrode or electrodes and the work. The welding is shielded by a blanket of granular, fusible material on the work. Pressure is not used and filler metal is obtained from the electrode or from a supplementary welding rod.

D. Order of Fabrication and Assembly:

1.) Cut pipe to nipple lengths.
2.) Butt or fillet weld flange to nipple.
3.) Inspect welds.
4.) Flat-face and serrate flange.
5.) Apply cement-mortar lining.
6.) Surface preparation and protective coating.

E. Material:

All material shall be of the quality specified. Physical defects that cannot be corrected so as to restore the design strength shall be rejected.

F. Pipe:

The steel pipe used to make the nipples shall be made of welded steel pipe ASTM A53, Type E, Grade A, or Grade B meeting the chemical requirements of Grade A, except the wall thickness shall have a maximum allowable variation of –3 percent and +2 percent of the specified thickness. The wall thickness shall be of the standard weight class for diameters 4- through 12-inch.

G. Flanges:

Flanges shall be flat-faced steel and shall meet the requirements of ASTM A105 and ANSI B16.5.

All Fillet welded slip-on flanged nipple assemblies shall be machined true and serrated after welding. A flat serrated flange face is also mandatory on the but welded welding-neck flanged nipple assemblies; machining after welding may be necessary. No layback or draft is allowed on the flanges. Serrations shall be concentric, 1/16-inch deep and 1/32-inch apart. Machining shall be done in accordance with Drawing A9421.

Flanges continued:
Flanges for Type I flanged nipple assemblies shall have boltholes drilled in accordance with ANSI B16.5 standards for 150 psi.

Flanges for Type II flanged nipple assemblies shall have bolt holes drilled in accordance with ANSI B16.5 Standards for 300 psi.

WELDING REQUIREMENTS:

A. Arc Welding Equipment:
   1.) Machines: Generators and transformers shall be designed expressly for welding, capable of delivering substantially constant current, and be adjustable through a range ample for the requirements of the work. Generators and transformers shall be provided with devices for controlling the welding current and arc voltage with meters indicating the amount of each at all times.
   2.) Automatic Welding Heads: Automatic welding heads with auxiliary handling equipment to provide control of electrode speed and welding arc shall be subject to the requirements of these specifications.

B. Filler Metal:
   The filler metal used in the automatic welding process shall be comparable to and compatible with the base material in its metallurgical properties and mechanical properties. Electrodes for manual welding shall meet the requirements of AWS 5.1, Classification E6010, or E7018 Low Hydrogen Series.

C. Ends of Sections:
   Ends of straight pipe shall have beveled ends for butt-welding.

D. Qualification for welders and welding operators:
   1.) All welders and welding operators shall be qualified under the applicable provisions of standard qualification procedure of the ASME Boiler and Pressure Vessel Code, Section IX, or AWS D1.1 Section 5 as last revised.
   2.) The Engineer will have the right at any time to call for and witness the making of test specimens by any welder in accordance with these specifications. The tests shall be at the Contractor’s own expense.

E. Welding Procedure Specifications:
   Welding procedure specifications shall be furnished to the Engineer prior to the welding of pipe. The specifications shall specify the type of plate edge preparation, welding method, arc voltage, arc amperes, travel speed, wire size and type, flux type, and all other procedures necessary to make the weld.

F. Welding:

1.) All welds shall be made by a shielded metal arc welding or submerged arc-welding process.
2.) Each layer of welded metal shall be thoroughly cleaned before additional filler metal is applied to its surface. Filler metal shall be deposited in successive layers so that there will be at least as many passes as there are complete multiples of 1/8-iunch in the plate thickness. Finished weld bead shall be central to the seam and the finished joint shall be free from depressions, burrs, undercut edges, irregularities, and valleys. The inner surface of the pipe shall be free form burrs and other irregularities resulting from welding.
3.) The welding process shall produce complete fusion of base metal and filler metal, free from cracks, oxides, and gas pockets within the limits set forth under these specifications.
4.) When welding is interrupted, the weld shall be cleaned and flux redistributed before work is resumed.

G. Correction to Welds:

1.) Welds found deficient in dimensions, but not in quality, shall be enlarged by additional welding after thoroughly cleaning the surfaces of previously deposited metal and the adjoining plate. When subsequent work has made the weld inaccessible or has caused new conditions, which would make such enlargement inadvisable, the original conditions shall be restored by removal of welds, members, or both , before enlarging the deficient weld.
2.) A defective weld or a weld made contrary to the provisions of these specifications shall be removed and remade throughout its length. The defective weld shall be removed by chipping, cutting, or melting throughout its depth to clean base metal. The melting or chipping shall not extend into the base metal beyond the heat-affected zone. When more than 5 percent of the total length of original weld per pipe section is defective, the section will be rejected.
3.) Burnt metal resulting from melting shall be removed by chipping or grinding to expose clean sound metal.
4.) Overheated filler metal and the overheated base metal adjoining it shall be removed and replaced by new filler metal properly applied. Plate damaged by overheating which cannot be satisfactorily repaired by filler metal shall be replaced.
5.) Repair welds shall be ground to the existing surface contours. Where required by the Engineer, inspection of the background area by the Contractor shall be made by the liquid penetrate method and will be witnessed by the Engineer.

6.) The liquid penetrate test shall be performed by the Contractor in accordance with the requirements specified in ASTM E 165, Method B. The materials used shall be Magnaflux Corporation Zyglo Fluorescent or Spotcheck or Met-L-Check Company Met-L-Check Company Met-L-Check Flaw-Findr.

H. Preparation of Ends of Pipe:

1.) Ends for Butt Welding: Ends of pipe sections and flanges for butt welds shall be prepared in accordance with these specifications and as shown on the drawings.

I. Factory Inspection and Testing of Steel Flanged Nipple Assemblies:

1.) General: Any or all tests provided herein to determine compliance with these specifications shall be made under the supervision of and have the approval of the Engineer as to compliance with these specifications. The Contractor shall notify the Engineer in advance of the manufacture or production of materials to be furnished under this contract to enable the Engineer to arrange for mill or factory inspection and testing. Materials to be tested and inspected by the Engineer shall not be released for shipment until they have satisfactorily passed the Engineers' inspection and test or until notice has been received from the Engineer that such inspection and testing will not be required. The Contractor shall also furnish to the engineer, three certified copies of all required factory and mill test reports. Any such tests or inspections shall not relieve the Contractor of any obligations under the contract. The Contractor shall bear all expenses of all factory tests on all material furnished. The Department will bear all expenses of final acceptance tests excepting salaries and expenses of the manufacturer's representatives during such tests.

The Engineer shall be notified five calendar days prior to the start of fabrication. Flanged nipple assemblies shall be fabricated only when the Engineer is present.

The Engineer will reject any or all flanged nipple assemblies that do not meet the requirements of these specifications.

The Engineer shall have free access to those area of all plants that furnish materials or perform work under these specifications.

The contractor shall furnish the Engineer reasonable facilities and space, without charge, for inspecting, testing, and obtaining information regarding the character of material used and the progress and manner of the work.

2.) Weld Tests:

a. Fillet Welded Flanges (slip-on): After welding, a visual, and a soap and compressed air test shall be used n the testing of double welded lap joints. This test shall be required by the Engineer on the first three flanged nipple assemblies of each size and run. After the above-mentioned test has been satisfactorily completed, the Contractor shall perform a soap and compress air test on every twentieth assembly.

   For the soap and compressed air test, the Contractor shall drill two ¼-inch holes 180 degrees apart. One hole shall be tapped for air hookup and the other hole shall be used to verify that air is flowing throughout the welded joint. After the above verification has been made, the second holes shall be plugged and a 40-psi air test pressure shall be applied to each welded joint. While under the required pressure, every portion of every seam forming the joint shall be swabbed with a heavy soap solution or a commercial bubble-producing leak test fluid and then examined carefully for leaks. The Contractor at his own expense shall repair all weld defects by chipping out and welding the section and then shall retest the joint. The Contractor shall provide all equipment and materials for making the test and shall plug weld the holes after testing.

b. Butt Welded Flanges: After welding, a visual and spot radiographic test method shall be used in the testing of butt welds.

   A 100 percent radiographic test shall be required by the Engineer for the first three flanged nipple assemblies of each size and run. After the above-mentioned test has been satisfactorily completed, the Contractor shall perform a 100 percent radiographic test on every twentieth assembly. Procedures and interpretation shall be in accordance with ASME Boiler and Pressure Vessel Code, Section 8, Section I, Part UW51, with the exception that ASTM E 94, Type 1, industrial radiographic film shall be used.

3.) Retest of Weld:

Additional weld tests may be required should there be any indication that an unsatisfactory weld has been made. These weld tests shall be made and the results approved by the Engineer as to compliance with these specifications prior to beginning another shift’s production.

Retest of Weld continued:
Retest of welds shall be performed entirely at the Contractor's expense and shall be made and approved before beginning the next shift's production in accordance with the following:

a. Should any of the weld tests taken from the shift's production fail to meet any of the requirements of these specifications, two additional weld tests shall be made from two flanged and nipple assemblies of that run.
b. Should any of the additional tests fail to meet the requirements of these specifications, all pipe sections of that shift's production run will be rejected.
c. If the additional tests meet the requirements of these specifications, the remaining pipe of the shift's production run shall be deemed acceptable. The original pipe may be reconditioned and resubmitted for inspection and additional tests shall be made on the original pipe.

4.) Inspection of the Lined and Coated Steel Flanged Nipple Assemblies:

a. General:

The Engineer shall at all times have the right to inspect and coating to the flanged nipple assemblies and make such tests from time to time as may be deemed advisable providing no delay in production of acceptable materials or equipment is caused thereby.

The Contractor shall furnish, at his own expense, reasonable facilities including tools and instruments for so doing and for obtaining such information as the Engineer desires respecting the progress and manner of the work and the character of the materials used. However, final inspection will be made upon receipt at the Department's specified receiving points, and if any materials or equipment do not meet the requirements of these specifications, the lot or any faulty portion thereof may be rejected.

Before offering a lot for inspection, the Contractor shall eliminate any portion, which is defective or does not meet the requirements of the specifications. All expense of the initial acceptance test will be borne by the Department. The expense of subsequent tests due to failure of materials or equipment first offered will be charged against the Contractor.

The fact that the materials or equipment have been successfully inspected, tested, and accepted by the Engineer shall not relieve the Contractor of responsibility in the case of later discover of flaws or defects.

Lining and Coating:

A. Cement-Mortar Lining:

After welding and machining, the interior pip surfaces shall be cement-mortar lined in accordance with AWWA C205, with the following modifications:

Cement-Mortar Lining continued:

1.) Lining: The lining shall be brought flush with the plain end of the pipe and beveled at the flange end in accordance with attached Drawing A9421. The lining thickness shall be 3/16-inch, 1/32-inch for 4-10 inch nominal pipe diameters and as specified in AWWA C205 for 12-inch nominal pipe diameters.
2.) Cement: Cement shall meet the requirements of the Department's Standard Specification G331 as last revised, for Type II Portland Cement.
3.) Sand: Sand shall meet the requirements of AWWA C205.
4.) Cleaning: Immediately prior to the application of the lining, the pipe shall be cleaned of all slime, dirt, loose rust, loose mill scale, and all other foreign materials.
5.) Finish: The mortar shall be distributed to a uniform thickness, with a smooth surface and a minimum of shrinkage.

B. Surface Preparation and Protective Coating: After cement-mortar lining, the flange and the exterior of the pipe shall be cleaned of all dirt, loose mill scale, loose rust and all other foreign material and coated with a single coat metal primer (Koppers Bitumastic Jet-Set Primer or equal) in accordance with the manufacturers recommendation. The coating shall be held back four inches from the end of the nipple.

Shipping and Handling of Lined and Coated Flanged Nipple Assemblies:
The lined and coated flanged nipple assemblies shall be handled, stored and shipped by the Contractor in a manner that will prevent damage to the coating, lining, and ends.

A. Handling: Finished flanged nipple assemblies shall be palletized in such a way that they can be easily loaded on trucks by the Contractor and will not fall or bump together during transportation. The pallet shall have a pad between it and the coated flanged nipple assemblies.

B. Finished Flanged Nipple Assemblies at Delivery Destination: All flanged nipple assemblies that show dents, kinks, damages at the delivery destination will be subject to rejection. All units that have been dropped from a truck or crane prior to completion of delivery will be subject to rejection. The Contractor shall replace, at the Contractor's expense, such rejected section with an undamaged section or he may recondition the rejected section.

Flanged nipple assemblies rejected because of substantial damage may be reconditioned by rolling or by pressure, but not by hammering, if the pipe can be returned to its design strength and specified characteristics. Pipe rejected because of gauges, scars, or other minor damages shall be reconditioned so as to return the pipe to its design strength and specified characteristics in a manner approved by the Engineer. Where reconditioning has required removal replacement of a weld or reshaping by rolling, the reconditioned area shall be inspected by 100 percent radiographs or retested hydrostatically by the Contractor as directed by the Engineer.

(END OF SPECIFICATIONS)

PIPE SIZE	150-PSI	300-PSI
4”	13-13-299	13-63-299
6”	13-16-299	13-66-299 13-66-297
8”	13-17-299	13-67-299 13-67-297
12”	13-19-299	13-69-299 13-69-297

ATTACHED DRAWINGS (4)

REVISED 4/2003

276

(Adv. Date _____)

TERESA REINOSA, BUYER
PHONE: (213) 367-2199

DEPARTMENT OF WATER AND POWER

OF

THE CITY OF LOS ANGELES

2
7
6

No. 276

SPECIFICATION/BIDDING DOCUMENTS FOR

Ductile Iron Pipe and Rubber Gaskets

LADWP Copyright 2011

A DOWNLOADABLE SPECIFICATIONS/BIDDING DOCUMENT
IS AVAILABLE AT THE LOS ANGELES BUSINESS ASSISTANCE VIRTUAL NETWORK WEBSITE
HTTP://WWW.LABAVN.ORG.
REGISTRATION IS REQUIRED.

NO HARD COPIES WILL BE AVAILABLE FOR MAILING OR PICKUP

Bids (HARD COPY ONLY) returnable at 2:00 P.M. on _____
To the: LOS ANGELES DEPARTMENT OF WATER AND POWER
ATTN: VENDOR LIAISON CENTER
111 NORTH HOPE STREET, L-43
LOS ANGELES, CA 90012

PART F - DETAILED SPECIFICATIONS

DIVISION F2 – DETAILED REQUIREMENTS

1. General: Ductile iron pipe and rubber gaskets shall be in accordance with these detailed specifications.

2. Standards:

a. ANSI/AWWA C104/A21.4, Standard for Cement Mortar Lining for Ductile Iron Pipe and Fittings for Water.

b. ANSI/AWWA C111/A21.11, Standard for Rubber Gasket Joints for Ductile Iron Pressure Pipe and Fittings.

c. ANSI/AWWA C151/A21.51, Standard for Ductile Iron Pipe, Centrifugally Cast, for Water.

d. ASTM A536, Specification for Ductile Iron Castings.

e. ASTM C 150, Standard Specification for Portland Cement.

f. NSF/ANSI 61-2010a, Drinking Water Systems Components-Health Effects

3. Requirements: Ductile iron pipe shall be bell and spigot with push on rubber gaskets joints, cement mortar lining and asphaltic exterior coating. The ductile iron pipe and rubber gaskets shall be certified as meeting the specifications of NSF/ANSI 61-2010a.

a. Pipe: The pipe shall be manufactured in accordance with ANSI/AWWAC 151/A21.51, and shall comply with the requirements of ASTM A536, Grade 60-42-10.

(1) Pipe shall be furnished in nominal sizes of 4, 6, 8, 12, 16, 20, and 24 inches in diameter.

(2) Pipe shall be thickness class 52 and have a minimum rated working water pressure of 350 psi.

(3) Pipe shall have a minimum nominal laying length of 18 feet. A maximum of 20 percent of the total number of pipe of each size specified in an order may be provided in lengths that are as much as one foot shorter than the nominal laying length; an additional 10 percent may be provided in lengths that are as much as 6 inches shorter than the nominal laying length.

(4) Pipe bell and spigot configurations shall conform to Tyton Joint design by United States Pipe and Foundry Company.

(5) Pipe shall be marked with the letters "DWP" in addition to the standard marking.

(6) All ductile iron pipe shall be cast, cleaned, cement lined, coated, tested and certified at a single manufacturing facility. All manufacturing units shall be contiguous to one another.

(7) For each order placed on this contract, the Contractor shall supply a minimum of 20 percent of each pipe size as Gauged Full Length.

b. Pipe Lining: The pipe shall be cement mortar lined in accordance with ANSI/AWWA C104/A21.4. The cement mortar lining shall be double thickness, shall have a smooth finish, and shall be thoroughly bonded to the interior pipe wall. The cement mortar lining shall not be seal coated. Application of the cement mortar lining shall be performed within one week of the pipe barrel being manufactured.

(1) Cement: Portland cement shall meet the requirements of ASTM C 150. The free calcium oxide content shall not exceed 1.5 percent. Total alkalies, considered as the sum of the sodium oxide and potassium oxide, with the latter calculated and included as sodium oxide, shall not exceed 0.6 percent.

(2) Preparation: Prior to lining, the surfaces shall be thoroughly cleaned and shall be free of blacking, graphite, grease, dirt, loose sand, rust, slag, flux, and any other foreign materials.

(3) Curing: Curing shall commence after the mortar has set but not later than 12 hours after the application of the lining. The lining shall be cured in accordance with one of the following methods:

(a) The steam curing method shall not begin sooner than 4 hours after application of the lining. Steam for curing shall be moist. The lining shall be cured a minimum of 16 hours prior to moving from the curing area. Steam temperatures shall not be less than 120F nor more than 150F. The interior lining shall be water cured for an additional 5 days after the initial steam cure, prior to shipping.

(b) The water curing method shall keep the entire surface of the lining wet throughout the entire curing period. The interior lining shall be water cured for 7 days prior to shipping.

(c) Any alternate curing method must be submitted to the Engineer for approval prior to manufacturing.

c. Pipe Coating: After the pipe has been lined, the exterior surfaces of the pipe and inside of the bells shall be cleaned and then lightly sprayed or brushed with an asphaltic paint or other Engineer-approved coating, to a thickness of one-mil in accordance with the procedures described in ANSI/AWWA C151/A21.51. The coating shall be sufficiently thinned so it will dry without running.

d. Rubber Gaskets: The rubber gaskets shall be Field Lok 350 push on gaskets for Tyton joints from United States Pipe and Foundry Company and shall meet the requirements of ANSI/AWWA C111/A21.11.

e. Lubricant: The joint lubricant shall be neutral to slightly alkaline and shall not contain any free acid. The lubricant shall be nontoxic, water soluble, and shall not impart a lingering, objectionable taste to the water. The lubricant shall be furnished in one-quart cans in the following minimum quantities with the pipe:

Nominal Pipe Size (Inches)	One Quart for Each (Feet)
4	600
6	450
8	300
12	200
16	135
20	100
24	90

4. Testing Records: Upon the Engineer’s request, records of quality control testing shall be furnished to the Engineer within 5 calendar days.

5. Inspection: The Engineer will have the right to inspect the work in the course of manufacture or fabrication and will make such tests from time to time as may be deemed advisable, provided such tests will cause no delay in the production of acceptable materials or equipment. However, final inspection will be made upon receipt at the Department's specified receiving points. If any material does not meet the requirements of these specifications, the lot or any faulty portion thereof may be rejected. The manufacturer shall provide certification in accordance with Section 5.1.1.2 of ANSI/AWWA C151/A21.51.

a. Surface Pitting: Any pipe having excessive pitting on the exterior surface will be rejected. Pitting will be measured by a pit depth gauge. Pitting will be considered excessive when it exceeds 20 percent of the wall thickness of the pipe or when the pitting exceeds 10 pits over a one square inch area. A pit is defined as a surface void caused by any foreign material or gas on the interior of the mold that displaces the molten iron during casting process that exceeds 10 percent of wall thickness in depth.

b. Notification: The Contractor shall notify the Engineer in advance of the start of manufacture or fabrication in accordance with the following:

(1) Not less than 5 calendar days prior to start of work when the place of manufacture or fabrication is less than 200 driving miles from downtown Los Angeles.

(2) Not less than 14 calendar days prior to start of work when the place of manufacture or fabrication is greater than 200 driving miles from downtown Los Angeles.

(3) Not less than 28 calendar days prior to start of work when the place of manufacture or fabrication is outside the continental United States.

The notification shall include the contract number and the contract title.

Should the Engineer elect to waive the right of inspection, the Engineer will promptly inform the Contractor.

c. Travel Costs: When the place of manufacture or fabrication is outside the continental United States, the Contractor shall reimburse the Department for all costs of travel, meals, and lodging, including weekends and holidays, for the Engineer. The Contractor shall reimburse the Department for one unrestricted round-trip airfare per inspector, for 2 inspectors to perform inspection up to 3 times per year.

6. Handling: Care shall be taken during all stages of manufacturing, packaging and delivery to prevent damage to the pipe. At no time shall pipe or other material be placed inside of the pipe.

7. Packaging: Pipe in 4-inch through 12-inch sizes shall be packaged in bundles. Spigot and bell ends shall alternate so that bell ends are not adjacent to each other. The number of pipe sections and layers in each bundle shall be in accordance with the following table:

Nominal Pipe Size (Inches)	No. of Pipe Sections in Bundle	No. of Layers
4	16	2
6	10	2
8	8	2
12	3	1

The bottom layer of pipe shall rest on two boards placed parallel to each other at right angles to the length of the bundle. The boards shall be at least 10 feet apart, but no more than 12 feet apart, center-to center, approximately equidistant from the ends. Bundles with more than one layer of pipe shall have two boards placed between the layers. Wedge shaped chock blocks shall be securely nailed to the top side of each end of each board. Two steel straps, not less than 1-1/4 inches wide and 0.030-inch thick, shall be placed around the entire bundle and securely fastened with a crimped metal seal. Each strap shall encircle the bundle in such a manner as to hold the boards and the chocks in place. All boards shall have a minimum nominal cross section of 4 inches by 4 inches.

ANSELMO G. COLLINS
Acting Director of Supply Chain Services

END OF DIVISION

Department of Water & Power of The City of Los Angeles

STANDARD SPECIFICATIONS For

Spec. W 249-R2 (Revised)

PIPE: AWWA SIZE, DUCTILE IRON, WATER, RUBBER GASKET JOINT, CEMENT-MORTAR-LINED, 4-INCH THROUGH 24-INCH

Supercedes Spec. W 249-R1

---

1. Scope: These specifications cover ductile iron, bell-and-spigot, cement-mortar-lined, AWWA size water pipe with single rubber gasket push-on joint.

2. National Standards:

a. Revision: All ANSI, ASTM, and AWWA Standards referred to herein shall be as last revised. In case of conflict, the Department's specifications shall govern.

b. Material: Ductile iron water pipe shall meet the applicable requirements of ANSI A21.51 (AWWA C151) and ASTM A 536, Grade 60-42-10, except as modified herein.

c. Cement-Mortar Lining: The cement-mortar lining of the ductile iron pipe shall meet the requirements of ANSI A21.4 (AWWA C104), except as modified herein.

d. Rubber Gaskets: Rubber gaskets shall meet the requirements of ANSI A21.11 (AWWA C111), except as modified herein.

3. Pressure, Dimensions, and Weights: Pipe shall conform to size, rated working water pressure, dimensions, and weights set forth in Drawing A 9380, and in the table below.

TABLE OF RATED WORKING WATER PRESSURE, DIMENSIONS, AND WEIGHTS

	Nominal Diameter of Pipe (Inches)						
	4	6	8	12	16	20	24
Rated working water pressure...psi	250	250	250	250	250	250	250
Thickness of pipe...in	0.29	0.31	0.33	0.37	0.37	0.39	0.44
*Outside diameter of pipe barrel...in	4.80	6.90	9.05	13.20	17.40	21.60	25.80

continued on next page...

TABLE OF RATED WORKING WATER PRESSURE, DIMENSIONS, AND WEIGHTS

	Nominal Diameter of Pipe (Inches)						
	4	6	8	12	16	20	24
Minimum bell thickness at shoulder..in	0.29	0.31	0.33	0.37	0.40	0.42	0.44
Depth of bell...in	3.15	3.38	3.69	3.75	5.00	5.00	5.00
Nominal weight per foot of barrel of pipe...lb	12.6	19.6	27.7	45.6	60.6	79.5	107.3
Minimum weight of bell...lb	8.0	13.0	18.0	29.0	57.0	74.0	90.0
Hydrostatic test pres-ure.....psi	500	500	500	500	500	500	500

4. Lengths:

a. Pipe shall have a nominal laying length of 18 feet. Actual pipe lengths shall vary 3 to 5 inches longer than the nominal length to produce the specified laying length.

b. The number of pieces of cut pipe shall not exceed 20 percent of the total pieces of each shipment. Cut pipe shall be not more than one foot shorter than the nominal laying length. Hash marks shall be painted at the end of the bell indicating the number of inches each pipe section is short of nominal laying length. One hash mark shall be used for each 3 inches. Payment for the cut lengths will be adjusted accordingly.

5. Spigot End: The spigot end of the pipe shall be beveled as shown on Drawing A 9380.

6. Tolerance in Diameter: The inside diameter of the bells and the outside diameter of the spigot ends shall not vary from tolerance dimensions shown on Drawing A 9380.

7. Rubber Gaskets: Gaskets shall be constructed with a soft rubber bulb and a harder rubber heel joined in a strong

vulcanized bond. Detailed requirements shall be as shown on Drawing B 5087 and as follows:

a. Bulb and Heel Requirements:

(1) Material: The gaskets shall be fabricated from a compound of first quality new SBR (Styrene Butadiene Rubber).

(2) Physical Tests: Test specimens shall be obtained from finished gasket or from the compound meeting the requirements of ASTM D 15 except that all durometer readings and accelerated aging test specimens shall be taken from finished gaskets.

Bulb Test	Physical Test Min or Max Requirements	ASTM Method
Tensile Strength	2000 psi, min, on specimen from finished gasket	D 412
Elongation	450%, min	D 412
Durometer (Shore A)	53 ±5 at 76F Ï6F on finished gasket	D 2240
Accelerated Aging	40% max deterioration in tensile strength and elongation (test specimens of 0.020-inch min to 0.08-inch max thickness cut with die "B" except on small gaskets where die "C" may be used) 5 points max increase in hardness. All determin-ations after 96 hrs at 158F and 300 psi oxygen pressure.	
Compression Set	20% max after 22 hrs at 158F	D 395
Water Absorption	-0 to +7% increase in weight after 7 days at 212F	D 471

Heel Test	Physical Test Min or Max Requirements	ASTM Method
Tensile Strength	1200 psi, min	D 412
Elongation	275%, min	D 412
Durometer (Shore A)	83 ±5 at 76F Ï6F on finished gasket	D 2240
Accelerated Aging	5 points max increase in hardness after 96 hrs at 158F and 300 psi oxygen pressure	
Compression Set	None required	
Water Absorption	-0 to +15% increase in weight after 7 days at 212F	D 471

c. Rubber Compounds: Rubber compounds shall contain anti-ozonants in sufficient amounts to make the gaskets resistant to ozone cracking; and in addition, the bulb shall meet the following test requirement. Sample finished gasket for test shall be selected at random and loop mounted to give approximately 20 percent elongation of the outer surface of the bulb. Heel elongation shall be approximately 10-16 percent.

Test	Physical Test Min or Max Requirements	ASTM Method
Ozone Cracking	No cracking of the gasket bulb after 25 hrs exposure in 50 P/HM ozone concentration at 100F	D 1149

d. Low Temperature Test Requirements: The bulb shall meet the following 94-hour and 30-day low temperature test requirements. Test specimens shall be obtained from finished gaskets.

Test	Physical Test Min or Max Requirements	ASTM Method
Low Temperature	30 percent compression set after 94 hrs at -20F and 24 hr recovery at the test temperature	D 1229
Compression Set	35 percent max compression set after 30 days at -20F and 24 hr recovery at the test temperature	D 395

e. Identification: The size Tyton joint and A-B bell, the manufacturer's mark and date, and the mold and cavity number shall be molded on the gasket as shown on Drawing B 5087.

The lettering shall be 0.02 inch in relief and 0.10 inch high and located at 1/3 points on the circumference.

8. Lubricant: The joint lubricant shall be a soft soap lubricant compounded from nonrancid vegetable oil and caustic potash. The compound shall be neutral to slightly alkaline and shall contain no free acid. The lubricant shall be nontoxic, water soluble, and shall not impart a lingering, objectionable taste to the water. The lubricant shall not deteriorate rubber and shall be noncorrosive to iron. The consistency and texture of the lubricant shall permit easy application to surfaces of the rubber gasket and the spigot end of the pipe. The lubricant shall be furnished in one-quart cans in the following minimum quantities with the pipe:

Nominal Pipe Diameter (Inches)	One Quart of Lubricant for Each (Feet)
4	600
6	450
8	300
12	200
16	135
20	100
24	90

9. Test Reports:

a. The Contractor shall furnish 3 copies of all test reports covering results of all tests performed on pipe.

b. Upon request, the Contractor shall furnish 3 certified copies of the test showing the physical properties of the rubber gasket material.

c. All test reports shall be accompanied by a letter of transmittal to the Stores Superintendent, General Services Division, Department of Water and Power, 410 Ducommun Street, Los Angeles, California 90012.

* 10. Lettering: In addition to the requirements of ANSI A21.51, Sec. 51-10, each length of pipe shall have "LA 250" or "LAWS 250" cast upon the face of the bell in raised or indented letters and number that can be read easily. If it is impossible to cast the characters on the face of bell, the characters may be cast on or near the bell. Letters or numbers shall not be stamped.

11. Handling: Care shall be taken in handling the pipes not to injure the coating as required in ANSI A21.51, Subsection 51-8, and no pipes or other material shall be placed in the pipes during transportation or at any time after they have been coated and cement lined.

12. Cement-Mortar Lining:

a. General: Interior surface of each piece of ductile iron pipe with the exception of the bells shall be cement-mortar-lined in accordance with ANSI A21.11 with the following modification:

The cement-mortar lining thickness shall be in accordance with ANSI A21.11, Subsection 4-10.2, Double Thickness, as follows:

(1) 4-Inch Through 12-Inch Diameter: 1/8 inch with a plus tolerance of 1/8 inch.

(2) 16-Inch Through 24-Inch Diameter: 3/16 inch with a plus tolerance of 1/8 inch.

Lining shall be full thickness to the end of the spigot and to the seat of the bell or shall be tapered for a length of not more than 2 inches. Cement-mortar lining shall

have a smooth finish, shall be dense, thoroughly compacted, and shall be bonded to the metal surface.

b. Portland Cement:

(1) General: The portland cement shall meet the requirements of ASTM C 150, Type II, except as modified and supplemented herein.

(2) Free Calcium Oxide: The free calcium oxide content shall not exceed 1.5 percent for cement.

(3) Total Alkalies - Sodium Oxide and Potassium Oxide: The total alkalies, considered as the sum of the sodium oxide and potassium oxide, with the latter calculated and included as sodium oxide, shall not exceed 0.6 percent.

c. Cement Samples: Prior to lining pipe, cement to be used shall be approved by the Department as to compliance with these specifications. One-pound test samples of cement for testing shall be shipped in airtight cans to the Material Testing Laboratory, Water System, Department of Water and Power, 510 East Second Street, Los Angeles, California 90012.

d. Mortar: The mortar mixture shall be not leaner than 3 parts sand and one part cement by loose volume.

e. Preparation of Pipe for Lining: The surfaces to be lined shall be thoroughly cleaned and free from blacking, graphite, grease, dirt, loose sand, rust, slag, flux, or other deleterious material. The surfaces shall be free from projections of iron which might reduce the thickness of the lining.

f. Curing: The pipe lining shall be cured by keeping the lining moistened until the required hardness is attained or by application of liquid membrane forming compounds for curing concrete. During the moisture curing, both ends of the pipe shall be covered with an impermeable membrane, burlap, or other means that will maintain a moist, saturated atmosphere inside the pipe. The lining and burlap shall be kept moistened until the required hardness has been attained. Steam curing obtaining equal results may be done. If the seal-coat method is used, the seal-coat compound shall meet the requirements of ASTM C 309, Type I. The curing compound material shall be applied at a rate of approximately 200 square feet per gallon.

13. Coating: After the pipe is cement lined, the exterior surface of the pipe and the inside of the bells shall be cleaned and then very lightly sprayed or brushed with a coal-tar-pitch paint or other acceptable coating in accordance with

ANSI A21.51 (AWWA C151), Subsection 51-8.1. The coat of paint shall be sufficiently thin so that it will dry without running.

14. Inspection:

a. The Department's Engineer shall at all times have the right to inspect the work in the course of manufacture and make such tests from time to time as he may deem advisable, providing no delay in production of acceptable materials or equipment is caused thereby. The Contractor shall furnish, at his own expense, reasonable facilities including tools and instruments for so doing and for obtaining such information as the Engineer desires respecting the progress and manner of the work and the character of the materials used. However, final inspection will be made upon receipt at the Department's specified receiving points; and, if any materials or equipment do not meet the requirements of these specifications, the lot or any faulty portion thereof may be rejected.

b. Before offering a lot for inspection, the manufacturer shall eliminate any portion which in his opinion is defective or does not meet the requirements of the specifications. All expense of the initial acceptance test will be borne by the Department. The expense of subsequent tests due to failure of materials or equipment first offered will be charged against the Contractor. The fact that the materials or equipment have been successfully inspected, tested, and accepted by the Engineer shall not relieve the Contractor of responsibility in the case of later discovery of flaws or defects.

c. The Contractor shall notify the Stores Superintendent, General Services Division, 410 Ducommun Street, Los Angeles, California 90012, Telephone Number (213) 481-4927 not less than 5 days prior to the start of manufacture. Should the Engineer elect to waive his right to inspection, he will promptly notify the Contractor.

d. Hardness of Lining: The cement-mortar lining of not less than 80 percent of the number of pieces of pipe furnished hereunder shall have a hardness reading of not less than 4, and the cement-mortar lining of the balance of the pipe shall have a hardness of not less than 3 as determined by the Department's hardness tester which is available to the bidder or the Contractor upon request.

e. Hardness Test: Scratch test shall be made on three 6-inch longitudinal lines spaced approximately 120 degrees apart at each end of the pipe tested. The hardness shall be the highest reading of the Department's hardness tester which does

not produce a furrow over 1/64 inch deep at any point in a line when it is perpendicular to the surface tested.

15. Packaging: Pipe in 4-inch through 12-inch sizes shall be packaged in bundles. Spigot and bell ends shall alternate so that bell ends are not adjacent to each other. The number of pipe sections and layers in each bundle shall be in accordance with the following table:

Nominal Pipe Size (Inches)	No. of Pipe Sections in Bundle	No. of Layers
4	16	2
6	10	2
8	8	2
12	3	1

The bottom layer of pipe shall rest on 2-inch by 6-inch boards placed parallel to each other at right angles to the length of the bundle. The boards shall be 10 feet-8 inches apart center-to-center, approximately equidistant from the ends. Bundles with more than one layer shall have two 2-inch by 6-inch boards placed between the layers. Wedge-shaped chock blocks shall be securely nailed to the top side of each end of each 2-inch by 6-inch board. Two steel straps, at least 1-1/4 inches wide and 0.030 inch thick, shall be placed around the entire bundle and securely fastened with a crimped metal seal. These straps shall encircle the bundle in such a manner as to hold the 2-inch by 6-inch pieces and the chocks in place. Bundles of 4-inch, 6-inch, and 8-inch pipe shall be sufficiently longer than the pipe so the bells of the bottom row of pipe will permit the pipe on the upper row to be rolled without interference between the bells. All bundles of the same size pipe shall be formed alike so that when the bundles are stacked one upon another there will be vertical lines of alternating bells and spigots at the ends of the bundles.

Note: Asterisk (*) indicates change in the paragraph.

(END OF STANDARD SPECIFICATIONS)

PART F - DETAILED SPECIFICATIONS

DIVISION F2 - DETAILED REQUIREMENTS

1. Scope: The Contractor shall furnish and deliver welded steel pipe for water distribution in 4-inch, 6-inch, 8-inch, 12-inch, 16-inch, and 24-inch nominal diameters, and will be ordered under the contract items specified in Division C2.

The pipe shall be furnished in nominal 20-foot lengths, with cement mortar lining, polyolefin dielectric undercoating, and reinforced cement mortar overcoating. One end of each pipe section shall be belled to provide slip joints for field welding. Source pipe shall be mill manufactured or fabricated from steel plate or coil in accordance with these specifications. The pipe diameters and wall thicknesses shall be as follows:

Nominal Diameter (Inches)	Outside Diameter (Inches)	Pipe Wall Thickness (Inches)
4	4-1/2	0.237
6	6-5/8	0.250
8	8-5/8	0.250
12	12-3/4	0.250
16	16	0.250
24	24	0.375

2. Definitions: Welding terms and definitions used in this Division shall be in accordance with ANSI/AWS A3.0. In addition, the following definitions shall apply:

a. Spiral Seam Pipe: Welded steel pipe in which the longitudinal weld seam forms a helix on the barrel of the pipe.

b. Straight Seam Pipe: Pipe in which the longitudinal weld seam is parallel to the axis of the pipe.

c. Production Weld: Any weld produced by automatic welding or hand welding during fabrication.

3. National Standards: All standards and specifications referred to in these specifications shall be as last revised, unless stated otherwise in these specifications. In case of conflict, the Department's specifications shall govern.

a. ASME Boiler and Pressure Vessel Code:

(1) Section V, Nondestructive Examination.

(2) Section VIII, Pressure Vessels, Division 1, Rules for Construction of Pressure Vessels.

(3) Section IX, Qualifications Standard for Welding and Brazing Procedures, Welders, Brazers, and Welding and Brazing Operators.

b. ASTM A36, Specification for Carbon Structural Steel.

c. ASTM A53, Specification for Pipe, Steel, Black and Hot-Dipped, Zinc-Coated Welded and Seamless.

d. ASTM A82, Specification for Steel Wire, Plain, for Concrete Reinforcement.

e. ASTM A181, Specification for Forgings, Carbon Steel for General Purpose Piping.

f. ASTM A185, Specification for Steel Welded Wire, Fabric, Plain, for Concrete Reinforcement.

g. ASTM A283, Specification for Low and Intermediate Tensile Strength, Carbon Steel Plates.

h. ASTM A516, Standard Specification for Pressure Vessel Plates, Carbon Steel, for Moderate- and Lower-Temperature Service.

i. ASTM A1011, Specification for Steel, Sheet and Strip, Hot-Rolled, Carbon, Structural, High-Strength Low-Alloy, and High-Strength Low-Alloy With Improved Formability.

j. ASTM A1018, Specification for Steel, Sheet and Strip, Heavy-Thickness Coils, Hot-Rolled, Carbon, Structural, High-Strength Low-Alloy, Columbium or Vanadium, and High-Strength Low-Alloy with Improved Formability.

k. ASTM C33, Standard Specification for Concrete Aggregates.

l. ASTM C109, Test Method for Compressive Strength of Hydraulic Cement Mortars.

m. ASTM C150, Specification for Portland Cement.

n. ASTM C685, Standard Specification for Concrete Made by Volumetric Batching and Continuous Mixing.

o. AWS A5.1, Specification for Carbon Steel Electrodes for Shielded Metal Arc Welding.

p. AWS A5.20, Specification for Carbon Steel Electrodes for Flux Cored Arc Welding.

q. AWS D1.1, Structural Welding Code - Steel.

r. AWS D10.9, Specification for Qualification of Welding Procedures and Welders for Piping and Tubing

s. NSF/ANSI 61, Drinking Water System Components - Health Effects.

t. AWWA C205, Cement-Mortar Protective Lining and Coating for Steel Pipe – 4 inches and Larger - Shop Applied.

u. AWWA C215, Extruded Polyolefin Coatings for the Exterior of Steel Water Pipelines.

v. NACE, RP-02-74, High Voltage Electrical Inspection of Pipeline Coatings Prior to Installation.

w. SSPC, SP-1, Solvent Cleaning.

x. SSPC, SP-5, White Metal Blast Cleaning.

y. SSPC, SP-10, Near-White Metal Blast Cleaning.

4. Drawings: The following drawings are a part of these specifications:

a. A-3821 Welded Slip Joints

b. A-1867 Weld Test Specimens

5. Inspection:

a. General: All production and testing shall be performed under supervision of the Engineer. Materials shall not be released for shipment until it has been inspected. The Contractor shall furnish 3 certified copies of all required factory and mill test reports.

The Contractor shall bear expenses of all factory tests, material and tools required for testing. The Contractor shall furnish the Engineer with facilities, samples, information,

and proper access authority for inspection and tests. However, final inspection will be made upon receipt at the Department's specified receiving points.

The additional inspection expense due to failure of materials or equipment after first inspection will be charged against the Contractor. The fact that the materials or equipment have been successfully inspected, tested, and accepted by the Engineer shall not relieve the Contractor of responsibility in the case of later discovery of flaws or defects.

b. Notification:

(1) Onsite Work: Wherever a test or inspection is required before starting any work activity, a phase thereof, or work by a different craft, the Contractor shall notify the Engineer in writing not less than 2 working days in advance, unless otherwise specified in the Detailed Specifications.

(2) Offsite Work: Unless otherwise specified in the Detailed Specifications, when items are to be tested or shop-fabricated, plant inspection shall be scheduled by contacting the Engineer in writing within the following time frames. The written notification shall include a schedule of activities on a daily basis. This notification requirement also applies when work is performed in phases or is interrupted.

(a) Not less than 5 calendar days prior to start of work when the fabrication shop is less than 200 driving miles from downtown Los Angeles.

(b) Not less than 14 calendar days prior to start of work when the fabrication shop is greater than 200 driving miles from downtown Los Angeles and within the continental United States.

(c) Not less than 28 calendar days prior to start of work when the fabrication shop is outside the continental United States.

(d) When the fabrication shop is greater than 200 driving miles from downtown Los Angeles, the Contractor shall reimburse the Department for all costs of travel, visa document fee, per-diem meals, and lodging, including weekends and holidays, for the Engineer. For each 14-calendar day period that plant inspection is required, the Contractor shall reimburse the Department for one unrestricted round-trip airfare per inspector.

Failure to give written notice prior to doing work will require the removal and replacement of the work without

additional cost to the Department if the Engineer cannot fully inspect all parts of the work to determine whether or not the work complies with these specifications.

c. QA Staging Inspection: The Engineer will perform visual inspection of each pipe to authorize delivery. No material shall be delivered without authorization.

(1) The Contractor shall provide a covered staging facility within 100 miles of downtown Los Angeles, to hold all material for inspection prior to delivery.

(2) LADWP will perform the visual inspection of each pipe ordered at the Contractor's material staging facility.

(3) The Contractor's material staging facility shall be the only LADWP inspection point where authorization for delivery will be given.

(4) Not less than 14 calendar days prior to staging the order, the Contractor shall notify the Engineer that the pipe ordered is available for inspection at their material staging facility.

(5) The Contractor shall provide the name and address of the material staging facility at the time of bid as specified in Division C3.

(6) The Engineer may elect to waive the inspection that is to be performed at the staging facility. The Engineer will notify the Contractor during the 14 days noted in this article.

6. Stulling Assemblies: The 24-inch diameter pipe shall have stulling installed inside the pipe to maintain the pipe's shape during shipping and storage. Assembly members shall be Douglas fir No. 2 or better, minimum 4"x4" in size at maximum spacing of 8'-0" on center, and shall consist of the following:

a. Stulls: Two radial posts, crossing and connected at midpoints at an angle of 90 degrees. Each end of the stulls shall be attached to the center of a brace block.

b. Brace Blocks: Beams attached perpendicular to a stull placed against the inside surface of the pipe, aligned parallel to the axis of the pipe.

7. Delivery: Deliveries of steel pipe shall be made on flatbed trucks only. No cargo container delivery is allowed. All shipment delivered by truck shall be capable of being unloaded from 3 sides of the truck bed with a forklift loader or from above with a crane.

8. Qualification of Welders: All welders and welding operators shall be qualified in accordance with the ASME Boiler and Pressure Vessel Code, Section IX.

a. There are no prequalified welding procedures except for fillet welds.

b. Provide supporting Procedure Qualification Records (PQR) with each Welding Procedure Specification (WPS).

c. Perform WPSs and PQRs in accordance with the ASME Boiler and Pressure Vessel Code, Section IX.

d. Each welder shall be annually tested in the Engineer's presence to demonstrate the ability to produce welds in compliance with these specifications.

e. The Engineer may require additional test plates as the work progresses, and the Engineer may remove from the project any welder whose work is unsatisfactory, regardless of the quality of their test welds.

9. Materials:

a. General: Steel shall be continuous cast, fully killed, fine grain. Material or pipe with scars or damage from hammering, pits greater than one-inch in diameter and deeper than 1/16 inch, laminations greater than 1/32 inch in depth, or any other physical defects shall not be used. The measured thickness of steel plate shall not be less than the specified thickness by more than 0.010 inch.

b. Mill-Manufactured Steel Pipe:

(1) Mill-manufactured (Mill) pipe shall be electric-resistance-welded pipe meeting the requirements of ASTM A53, Type E, grade A. Grade B will be accepted if it meets the chemical requirements of Grade A. Mill pipe shall have factory markings of heat number for traceability. The following exceptions to ASTM A53 shall apply:

(a) The pipe wall thickness, as measured on inspection, shall neither be less than 5 percent nor greater than 5 percent of the pipe wall thickness as specified in the order.

(b) Perform additional tests for each size of pipe, when furnished in quantities in excess of 1,000 feet. Test per the requirements of applicable pipe specifications. The location of test sample shall be selected by the engineer.

c. Steel for Fabrication of Pipe: All steel used in the fabrication of steel pipe shall be identified. Documentation of identification shall be maintained throughout the fabrication process. Remnant pipe shall not be used without written approval of the Engineer.

(1) Plate Steel: Steel plate shall meet the requirements of ASTM A 283, Grade D or ASTM A 36. The Supplementary Requirements of Appendix X4 of ASTM A6 shall apply. Prior to fabrication of pipe, plate from heat number shall be tested for compliance with requirements of the plate specifications.

(2) Coil Steel:

(a) Standards: Coil steel used in the fabrication of welded steel pipe shall meet the requirements of one of the following standards and respective Appendix X1:

[1] ASTM A1011, of the designation, Structural Steel (SS) Grade 33, or SS Grade 36, Type 1.

[2] ASTM A1018, SS Grade 33 or 36, Type 1.

(b) Coil Testing: Specimens for a tensile test and a bend test shall be taken from the outer lap of each coil, and from the middle one third of each coil.

[1] The maximum tensile strength of each specimen shall be 75,000 psi. When the tensile strength exceeds 70,000 psi, the elongation shall exceed 30 percent in a 2 inch gauge.

[2] Tensile tests shall include, yield strength, ultimate strength and percent elongation.

[3] Bending test shall be performed using the minimum inside radii specified in Appendix X1 of ASTM A1011.

[4] If any test specimen fails to meet the requirements of the material specifications, test a second specimen plate from the same heat number. If any test specimen from the second specimen plate fails, then all steel from the same heat will be rejected.

10. Fabrication of Welded Steel Pipe:

a. General: Straight seam or spiral seam pipe shall be fabricated from steel plate or coil by electric arc

welding in accordance with these specifications. No hammering of pipe or weld shall be allowed during or after fabrication.

b. Edge Preparation and Forming:

(1) All edges shall be cut straight, uniform, smooth, and free from scale and slag accumulation. Plate edges and surfaces adjacent to the edges to be welded shall be cleaned to remove all oil, grease, rust, and mill scale.

(2) The longitudinal edges of all flat plates shall be lap-broken prior to the plate forming operation. Perform lap-breaking operation by either rolling or die pressing. Provide a uniformly curved plate edge matching the curve of the pipe shell.

(3) Plates shall be formed to the proper curvature by rolling or pressing before the seams are welded to provide a uniform circular curve.

(4) All coil steel for spiral-seam pipe shall be helically formed before welding of the seams.

(5) Edges shall be matched and held in position during the welding operation.

(6) The offset of abutting edges, after welding, shall be not more than 1/32 inch.

c. Seams: Straight seam pipe of 16 inches diameter or greater shall have not more than a total of 3 longitudinal seams and 2 girth seams. Stagger adjacent longitudinal seams 60 degrees.

d. Coil Ends: Ends of coils shall be joined with a full penetration, double-welded, butt joint. All coil splices and 36 inches of its circumferential junction welds shall be 100 percent x-rayed. The following restrictions shall also apply:

(1) The coil end shall be not less than 12 inches from the end of any pipe section.

(2) The coil end shall be not less than 12 inches from any girth welds.

(3) No more than one coil end weld shall be used in any pipe section.

e. Welding:

(1) General: Minor adjustments allowed by AWS D1.1, may be made to weld procedures to accommodate production variations, when approved by the Engineer in writing. All butt joints shall be full penetration double-welded.

(2) Welds:

(a) All welds shall produce complete fusion with the base metal. Generators and transformers shall be used with devices for controlling the welding current and arc voltage and with meters indicating the amount of each at all times.

(b) All longitudinal, spiral, and girth seams shall be welded using a submerged arc welding process.

(c) Shielded Metal Arc Welding (SMAW) may be performed when it is physically impossible to use a Submerged Arc Welding (SAW) process. SMAW may be performed on straight pipe sections to make tack welds, to repair structural defects, and to repair automatic machine welds.

(d) Each layer of weld metal shall be cleaned before additional filler metal is applied.

(e) Outside face reinforcement between 1/16 inch and 1/8 inch thick shall be provided. The weld face may be ground or chipped to achieve the 1/8 inch face reinforcement thickness.

(f) The weld face shall be central to the joint seam. The finished joint shall be free from depressions, burrs, undercut edges, irregularities, and valleys.

(g) The weld face on the inside of the pipe shall be ground or chipped until the weld reinforcement is not more than 1/16 inch thick. Grinding or chipping shall not extend below the surface of the plate.

(h) Fillet welding shall be done in accordance with AWS D1.1. For base metal 1/4 inch thick or more, fillet welds shall be 1/16 inch less than the thickness of the base metal. Fillet welds shall fully penetrate into the joint root. Deposit filler metal in successive layers so that there will be at least as many passes as there are complete multiples of 1/8 inch in base metal thickness.

(i) The filler metal used with automatic welding processes shall be comparable to and compatible with the

base material in metallurgical and mechanical properties and design and service requirements.

(j) Electrodes for manual shielded metal arc welding shall conform to AWS A5.1, Classification E6010 or E7018 Low Hydrogen Series.

(3) Weld Repair:

(a) Not more than 5 percent of the total length of the original weld in any pipe section may be repaired. Pipe sections requiring repair of more than 5 percent of the welded length will be rejected.

(b) Welds found deficient in dimensions, but not in quality, shall be enlarged by additional welding.

(c) A weld not in compliance with these specifications shall be removed throughout its length and depth by chipping or melting to expose clean base metal. For a local deficiency, a sufficient amount of weld metal shall be removed to ensure that sound weld metal is remaining.

(d) Cutting or chipping shall not extend into the base metal beyond the heat-affected zone during removal of the weld.

(e) Inspection of the background area shall be performed by a liquid dye penetrant method approved by and in the presence of the Engineer. Where there are any linear or porosity indications, the discontinuities shall be removed prior to applying new weld metal.

(f) Overheated weld metal and base metal shall be removed and replaced with new weld metal. If the base metal cannot be repaired with weld metal, it shall be replaced.

f. Preparation of Pipe Bell Ends: One end of each pipe section shall be belled to provide slip joints for field welding as follows:

(1) Bell ends shall be pressed or swedged to the required shape in a uniform and concentric manner. The Contractor shall use an appropriate method and employ all necessary preparation measures to prevent tearing, cracking and other damage to the steel during the forming process. After forming, testing of weld shall be done using magnetic particle or a liquid dye penetrant method.

(2) The length of the straight portion of the bell shall be not less than 1-1/2 inches for pipe 24 inches in diameter or less, and not less than 3 inches for pipe greater than 24 inches in diameter.

(3) The Contractor shall grind the weld faces flush with the base metal surface and remove all protrusions from the surface on the inside of the bell and on the outside of the spigot end flush, within 6 inches of the pipe end.

11. Source Quality Control:

a. Weld Testing and Inspection: The Contractor shall prepare and test all weld test specimens, including all required reconditioning of a pipe section from which the specimen plate is cut, at no additional expense to the Department.

(1) Weld Test Specimens: The Contractor shall obtain test specimen plates by cutting transverse to the spiral seam, longitudinal seam, or girth seam of the pipe sections at a location directed by the Engineer. Plates may be obtained from the pipe section or a 2-foot drop section. Test specimen plates for double-welded butt joint seams shall comply with AWS B4.0. The plates shall be large enough to provide all test specimens. If the specimen is taken from the pipe area, it shall be repaired by welding a plate of the same material, thickness, and curvature as the pipe. The repair weld shall consist of a double welded butt joint.

(2) Weld Tests:

(a) Reduced Section Tensile Test: The yield strength shall not be less than the minimum yield strength of the base metal. The tensile strength shall not be less than the minimum tensile strength of the base metal.

(b) Guided Bend Test: The Contractor shall perform bend tests on a root weld specimen and on a face weld specimen. The specimens shall be bent cold at 180 degrees around a pin or mandrel having a diameter 3 times the thickness of the plate, and show an elongation of not less than 20 percent across the weld. The entire bent area of the specimen shall be free of fractures.

(c) Radiographic Test: The Contractor shall take a spot radiograph, 4-1/2 inches by 17 inches, at a location as selected by the Engineer. Procedures and interpretations shall be in accordance with ASME Boiler and Pressure Vessel Code, Section 8, Division 1, Part UW51 except that ASTM E 94, Type 1 industrial radiographic film shall be used. Additional

radiographic tests will be required if weld irregularities, including seam misalignment or erratic profile, are observed.

(d) **Etch Test:** The Contractor shall perform Macro Etch Tests in conformance with AWS D1.1.

(3) **In-Process Visual Inspection:** The Engineer's acceptance is required at the following hold points:

(a) After completion of fit-up.

(b) After completion of the root pass and any required dye-check.

(c) After completion of the weld.

(4) **Prototype Weld Tests:** The Contractor shall perform a reduced section tensile test, a guided bend test, and a spot radiograph of the welded joint of a prototype pipe at two locations, as follows:

(a) Fabricate a 10-foot long prototype of the steel pipe using the submitted WPS for every mill run.

(b) Should any of the tests fail to meet the requirements of these specifications, make corrective adjustments to the welding procedure and fabricate another 10 foot long prototype.

(c) Submit actual welding parameters after acceptance of the prototype weld tests by the Engineer.

(5) **Production Weld Tests:** For both spiral welded and straight seam pipe, the Contractor shall perform production weld tests consisting of a reduced section tensile test, a guided bend tests, and a spot radiograph, as follows:

(a) Prepare and test one set of production weld test specimens from each shift's production run or 600 linear feet of weld, whichever is smaller.

(b) If any of the shift’s production weld tests fail to meet the requirements of these specifications, perform one set of additional tests on each preceding and successive sections of pipe. Conduct tests on additional preceding and successive pipe sections until the tests meet the requirements of these specifications. The remaining pipe of the shift's production run shall be deemed acceptable.

(c) The Engineer will determine the status of the original pipe section not meeting the requirements of these specifications.

(d) The Engineer may require additional weld test specimen plates if there is any other indication that an unsatisfactory production weld has been made.

(6) Straight Seam Pipe:

(a) Welds shall be inspected by the in process visual inspection method.

(b) Girth seams shall be 100 percent radiographed. When 100 percent radiography is physically impossible, hydrostatic testing may be substituted.

(c) Soap and air test shall be performed where applicable.

(d) Non destructive testing shall be performed on all pipe welds subjected to mechanical forming after welding.

(7) Weld Re-Inspection: Any portion of a pipe belled, sized, or otherwise deformed after the hydrostatic test shall have the weld re-inspected in accordance with the API Standard 5LX, Section 7, and Paragraphs 7.18 through 7.21.

b. Hydrostatic Testing: The Contractor shall hydrostatically test each section of pipe, maintaining the test pressure for not less than 2 minutes. The Engineer may require the test pressure to be held for up to 5 minutes.

While under pressure, the welded seams shall be inspected and plainly marked at each leak. Any section showing more than one leak for every 5 feet of weld seam will be rejected. Otherwise, leaks shall be repaired, except repaired weld seam shall not exceed 2-1/2 percent of the total length of the welded seam. The repaired pipe shall be hydrostatically retested. Any pipe section that leaks during a retest will be rejected. The use of caulk or any other method to close leaks other than repair of the weld is prohibited.

After testing by the Engineer, stamp pipe sections with a legible mark of identification.

Hydrostatic test pressure shall be determined by the following formula:

P = 2St/D, where:

P = Pressure in pounds per square inch (psi).

S = 0.75 x Steel Minimum Yield Strength in psi.

t = Pipe Wall Thickness in inches.

D = Pipe Outside Diameter in inches.

c. Tolerances:

(1) Diameter:

(a) The inside diameter of a bell shall be between 1/32 inch and 1/16-inch greater than the outside diameter of the adjoining spigot end.

(b) The pipe shall have a uniform circular cross-section throughout its length.

(2) Circumference:

(a) The circumference shall be computed from the outside diameter.

(b) The measured circumference of the pipe within 8 inches from each end shall not be more than 1/8 inch greater than the computed circumference nor 1/16 inch less than the computed circumference.

(c) The measured circumference of the pipe, except within 8 inches from each end, shall not be more than 9/32 inch greater than the computed circumference nor 3/32 inch less than the computed circumference.

(3) Roundness:

(a) Roundness shall be measured radially on either the inside or outside of the pipe with a segmental circular template. The template shall have an arc length and a radius equal to the specified inside or outside pipe or bell radius, depending upon where the measurements are taken. The maximum permissible radial deviation between the pipe shell and the template shall be 0.5 percent of the specified diameter but not more than 1/4 inch.

(b) Pipe ends that exceed these roundness tolerances may be reconditioned by rolling or by pressure. Do

not use hammering. Resubmit to the Engineer for approval and hydrostatically test.

(c) The pipe shall not be out-of-round on any diameter by more than plus or minus one percent of the specified diameter. Within 8 inches from the ends, the pipe shall not be out-of-round on any diameter by more than plus or minus 0.4 percent of the specified nominal diameter.

(4) **Length**: Each pipe section shall be furnished with a length of not less than 18 feet and not more than 22 feet.

(5) **Straightness**:

(a) Pipe sections shall be straight with the walls parallel to the axis of the pipe. Pipe sections with misalignment from a straight line parallel to the pipe axis exceeding 1/8 inch for 10 feet of pipe length will be rejected.

(b) Misalignment of the bell to the straight pipe shall be limited to one half the plate thickness.

d. **Cleaning**:

(1) The Contractor shall thoroughly clean the pipe of loose mill scale, paint, oil, grease, burned flux, molten metal, and other foreign substances.

(2) All pipe sections and special sections that have dents, kinks, abrupt changes of curvature other than specified, or damage at any time will be rejected. All pipe sections or special sections that have been dropped from a truck or crane will be rejected. The Contractor shall replace the rejected sections with undamaged sections.

(3) Pipe rejected because of substantial damage may be reconditioned upon approval of the Engineer by rolling or by pressure. Hammering is prohibited. Pipe rejected because of gouges, scars, or other minor damage shall be reconditioned to return the pipe to its design strength and specified characteristics in a manner approved by the Engineer. Where reconditioning has required removal and replacement of a weld or reshaping by rolling, the reconditioned area shall be inspected by spot radiographs or retested hydrostatically by the fabricator as determined by the Engineer.

12. Protective Lining and Coatings:

a. Materials:

(1) Cement Mortar: The Contractor shall design a cement mortar for pipe lining and overcoating for the following:

(a) A minimum compressive strength of 2,600 psi in 7 days.

(b) A minimum compressive strength of 4,500 psi in 28 days.

(c) Materials shall comply with AWWA C205 as modified herein.

(d) Cement shall be low-alkali Portland cement meeting the requirements of ASTM C150, Type II or Type V.

(e) Water shall contain not more than 1,000 ppm of chlorides calculated as Cl, nor more than 1,000 ppm of sulfates calculated as SO4. Water shall be clean, colorless, and free of any materials that may reduce the strength or durability of the cement mortar.

(f) The cement lining or all components used to make the cement lining applied to the interior of pipe and in contact with potable water must be NSF/ANSI-61 certified.

(2) Steel Reinforcement: Steel reinforcement shall be clean and free of rust. Wire-fabric reinforcement for mortar coating shall be not be crimped.

(3) Extruded Polyolefin Undercoating: The undercoating shall be a multi-layer polyolefin coating system that complies with AWWA C215, except as modified herein. The coating system shall be side-extruded (Type B) consisting of a butyl adhesive layer and a polyethylene sheath.

b. Application:

(1) General: Protective linings and coatings shall be applied in accordance with the applicable referenced standards and the manufacturer’s requirements, except as amended and modified herein.

(2) Surface Preparation: Following standard cleaning and surface preparation, the Contractor shall test all

steel surfaces for residual chloride concentration and remove before applying coatings and linings.

(3) Lining and Coating Hold Backs: Pipe ends shall be protected from any contact with primer, adhesive, or coating for the specified distances. The method of protecting such areas shall be subject to the approval of the Engineer as to compliance with this requirement.

(a) Lining Hold Back: The cement mortar lining shall cover the pipe interior, except it shall be held back 1-1/2 inches from the bell end.

(b) Undercoat Hold Back: The dielectric undercoating shall cover the pipe exterior up to the following distances from the pipe ends:

Pipe End	Hold Back (Inches)
Spigot	5 to 5-1/2
Bell	3-1/2 to 4

(c) Overcoat Hold Back: The cement mortar overcoat shall cover the dielectric coating up to the following distances from the pipe ends:

Pipe End	Hold Back (Inches)
Spigot	7-1/2 to 8
Bell	6 to 6-1/2

(4) Cement Mortar Lining Application: Cement mortar lining shall be applied to the interior pipe surfaces by centrifugal process in accordance with AWWA C205, as modified herein. Latency shall be removed to obtain a smooth, hard, finished surface.

(a) Lining Thickness:

Nominal Pipe Size (Inches)	Thickness (Inches) Minimum	Minimum
4, 6, and 8	1/4	3/8
12 and 16	5/16	7/16
24	3/8	1/2

(b) Curing: Cement mortar lining shall be steam or water cured. Immediately after lining each pipe

section, the ends shall be sealed with 4 mils thick plastic sheeting and maintained in place during storage and delivery.

Steam curing shall begin not sooner than 4 hours after application of the lining and be applied continuously for not less than 16 hours with a relative humidity of not less than 85 percent at temperatures between 90F and 125F.

The lining shall then be water cured for 4 days prior to shipping. The interior lining of the pipe shall be kept moist and the pipe ends sealed until the pipe is delivered to the jobsite.

(c) **Repairs**: Defective or damaged lining shall be cut out and repaired with materials equal to the adjacent undamaged section. The edges of the existing lining shall be cut approximately normal to the pipe shell. Areas greater than 5 inches by 9 inches shall be reinforced with 2 inch by 4 inch, 13-gage, welded wire-fabric, spot-welded to the pipe. Repaired areas shall be water cured for 7 days prior to shipping.

(5) **Polyolefin Undercoating Application**: The polyolefin shall be applied in a continuous operation as prescribed in AWWA C215, except for the following:

(a) Exterior weld seams shall be ground flush to a smooth finish without reducing the wall thickness and the surface shall be prepared per SSPC SP6 Near-white metal blast.

(b) Weld seam cover plates shall not be used.

(c) The entire pipe shall be preheated to not less than 80F.

(d) The thickness of the adhesive shall be not less than 10 mils. If testing reveals a thickness less than 10 mils, the entire coating system shall be striped from the pipe and reapplied.

(e) The adhesive shall have an edge lap of not less than 0.5 inch and not more than 2 inches.

(f) The thickness of the polyethylene sheath shall be not less than 60 mils.

(g) Edge lap the polyethylene sheath not be less than one inch.

c. Inspection and Testing:

(1) General: The Contractor shall:

(a) Visually and electrically inspect the dielectric undercoating for holidays before leaving their respective application area. Re-inspect coating prior to application of cement mortar coating.

(b) Ensure that a proper bond exists between each undercoating system and the pipe. Perform adhesion tests as requested by and in the presence of the Engineer.

(c) Provide a copy of all test reports to the Engineer daily, including results of the following:

[1] Cement mortar lining, and concrete compression tests.

[2] Tensile, bend, and macro etch tests of welds.

[3] Outside diameter check of the sized bell and spigot of each cylinder.

[4] Profile tests of blasted surface of steel pipe.

[5] Peel tests.

[6] Chloride tests.

[7] Incidental damage and repairs.

(2) Holiday Test: The holiday test shall be performed immediately after application at a voltage recommended by the test manufacturer’s printed instructions and as required by AWWA C203, and C215.

(3) Megger (ohmmeter) Test: The Megger test shall be performed immediately following cement mortar coating application.

(4) Adhesion Peel Tests: Adhesion peel tests shall be performed on the dielectric undercoating as follows:

(a) Location: Two locations selected by the Engineer. Perform 3 tests at each location.

(b) Frequency:

[1] At the beginning of each production run, test first 3 pipes.

[2] During a regular production day, test the first pipe, middle pipe and the last pipe of the day.

(c) Procedure: The Contractor shall:

[1] Condition the test specimen to not more than 80F.

[2] Using a steel template, mark a one inch by 15 inch rectangular strip, the long axis of which shall be perpendicular to the pipe axis.

(d) Acceptance Criteria:

[1] The average adhesion strength for each location shall be not less than 25 pounds per inch of width.

[2] No single test shall result in adhesion strength below 20 pounds per inch of width.

(e) Re-tests:

[1] The Contractor may allow an additional 24 hours of cure time before retesting.

[2] For a failed re-test, perform additional testing within the body of the pipe as directed by the Engineer. If any portion of the pipe fails the re-test, that portion, as determined by the Engineer, shall be stripped to bare metal, recoated, and retested.

13. NSF/ANSI 61 Certification: Pipe furnished under these specifications shall be acceptable to use in the distribution of drinking water in accordance with Article 7 of the California Waterworks Standards (Chapter 16) of Title 22, Division 4 of the California Code of Regulations (CCR). In accordance with CCR Section 64591, the pipe shall be tested and certified as meeting the specifications of the National Science Foundation/American National Standards Institute, Standard 61 (NSF/ANSI 61), Drinking Water System Components – Health Effects. Certification shall be in effect on or before the date of submittal of bids.

a. Certification Organization: Certification shall be based on testing conducted by a product certification organization accredited by ANSI.

b. Certification Basis: Certification shall be on the basis of one of the following:

(1) Finished pipe; or

(2) Applied cement mortar lining.

c. Uncertified Products: As allowed under CCR Section 64593, if a bidder's proposal does not include the required certification at the time of bid, that proposal may be considered by the Department if all of the following conditions exist:

(1) No other bidder submitted a proposal for pipe that included the required certification at the time of bid.

(2) The bidder submits, as part of the proposal to furnish pipe that is not certified, written proof documenting that the pipe being proposed was submitted for certification of NSF/ANSI 61 compliance testing on or before the date of submittal of bids.

GWENDOLYN W. WILLIAMS
Director of Supply Chain Services

END OF DIVISION

Revised
Jan. '08

ADDENDUM TO SPEC. W 302-R3

PIPE: STEEL, ELECTRIC-FUSION, BUTT-WELDED, LINED, AND COATED

1. **General**: The Electric-Fusion Steel Pipes furnished under these specifications shall be in accordance with Department's Standard Specifications W 302-R3, modified as follows:

a. **Page 3**: That portion of the first paragraph of Article 3 Subarticle a(1) now reading:

``Thickness: The pipe wall thickness as measured on inspection, shall neither be less than 3 percent nor greater than 2 percent of the pipe wall thickness as specified in the order.''

is changed to read:

``Thickness: The pipe wall thickness as measured on inspection, shall neither be less than 5 percent nor greater than 5 percent of the pipe wall thickness as specified in the order''

b. **Page 15**: That portion of the pipe table of Article 8 Subarticle b now reading:

``Spigot or plain	5-1/2	7
Bell	4	4

is changed to read:

``Spigot or plain	5 to 5-1/2	6-1/2 to 7
Bell	3-1/2 to 4	3-1/2 to 4

c. Page 16: That portion of the pipe table of Subarticle c(3) now reading:

``Spigot or plain	7-1/2	9
Bell	6	6

is changed to read:

``Spigot or plain	7-1/2 to 8	9 to 9-1/2
Bell	6 to 6-1/2	6 to 6-1/2

d. Page 21: That portion of the pipe table of Subarticle 4(a) now reading:

``Spigot or plain	5-1/2	7
Bell	4	4

is changed to read:

``Spigot or plain	5 to 5-1/2	6-1/2 to 7
Bell	3-1/2 to 4	3-1/2 to 4

e. Page 16: Article 8, Subarticles d, d(1), and d(2) are replaced with the following:

d. Polyethylene Coating:

(1) General: When specified in the order, the exterior surfaces of the pipe shall be coated with a multi-layer extruded polyethylene coating system that complies with AWWA C215, except as modified herein.

(2) Materials: The coating system shall be side-extruded (Type B) consisting of a butyl rubber adhesive layer and a polyethylene sheath.

f. Page 21: Article 8, Subarticle d(4)(b) is replaced with the following:

(b) Extruded Polyethylene Coating System: Grind exterior weld seams flush to a smooth finish without reducing the wall thickness. Apply coating system in a continuous operation as prescribed in AWWA C215, except for the following:

[1] Do not use weld seam cover plates.

[2] Preheat the pipe to not less than 80F.

[3] The thickness of the adhesive shall be not less than 10 mils. If testing reveals a thickness less than 10 mils, strip the entire coating system from the pipe and reapply.

[4] Edge lap the adhesive not less than 0.5 inch and not more than 2 inches.

[5] The thickness of the polyethylene sheath shall be not less than 60 mils.

[6] Edge lap the polyethylene sheath not less than one inch.

g. Page 22: Article 8, Subarticle d(4)(c) is deleted.

h. Page 23: That portion of Article 9, Subarticle b now reading:

"The tester shall be operated at the following minimum voltages:

Coating System	Volts (Minimum)
Polyken YG111	6,000
Plexco X-TRU-COAT	10,000"

is changed to read:

"The tester shall be operated at a voltage recommended by the test manufacturer's printed instructions and as required by AWWA C203 and C215."

ADDITIONAL GENERAL CONDITIONS

1. Notification for Inspection of Work:

a. Permit Inspections: The Contractor shall call and shall make arrangements in advance for all permit inspections, including those permits obtained by the Department, as required by and directly with all government and regulatory agencies.

b. Tests or Inspections Specified by the Department:

(1) Onsite work: Wherever a test or inspection is required before starting any work activity, a phase thereof, or work by a different craft, the Contractor shall notify the Engineer in writing not less than 2 working days in advance, unless otherwise specified in the Detailed Specifications.

(2) Offsite work: Unless otherwise specified in the Detailed Specifications, when items are to be tested or shop-fabricated, plant inspection shall be scheduled by contacting the Engineer in writing within the following time frames. The written notification shall include a schedule of activities on a daily basis. This notification requirement also applies when work is performed in phases or is interrupted.

(a) Not less than 5 calendar days prior to start of work when the fabrication shop is less than 200 driving miles from downtown Los Angeles.

(b) Not less than 14 calendar days prior to start of work when the fabrication shop is greater than 200 driving miles from downtown Los Angeles and within the continental United States.

(c) Not less than 28 calendar days prior to start of work when the fabrication shop is outside the continental United States.

(d) When the fabrication shop is greater than 200 driving miles from downtown Los Angeles, the Contractor shall reimburse the Department for all costs of travel, meals, and lodging, including weekends and holidays, for the Engineer. For each 14-calendar day period that plant inspection is required, the Contractor shall reimburse the Department for one unrestricted round-trip airfare per inspector.

Failure to give written notice prior to doing work will require the removal and replacement of the work without additional cost to the Department if the Engineer cannot fully inspect all parts of the work to determine whether or not the work complies with these specifications. The Contractor shall furnish the Engineer with facilities, samples, information, and proper access authority for inspection and tests.

2. Delivery of Material: Deliveries of steel pipes shall be made on flatbed trucks only. No cargo containers will be allowed. All shipment delivered by truck shall be capable of being unloaded from 3 sides of the truck bed with a forklift loader or from above with a crane.

3. Stulling Assemblies: Steel Pipes 24-inch in diameter and larger shall have stull installed inside the pipe. Stull assembly is defined as the post and cross brace used to maintain the pipe's shape during shipping and storage. Assembly members shall be Douglas fir No. 2 or better, minimum 4"x4" in size at maximum spacing of 8'-0" on center.

Department of Water & Power
of The City of Los Angeles

STANDARD SPECIFICATIONS
FOR

PIPE: STEEL, ELECTRIC-FUSION,
BUTT-WELDED, LINED, AND COATED

Spec. W 302-R3
(Revised 10/21/94)

Supersedes
Spec. W 302-R2

---

1. **Scope**: These specifications cover the manufacture of electric-fusion, butt-welded, lined and coated steel water pipe with either straight or spiral longitudinal weld seams employing either shielded metal-arc welding or submerged arc welding. The lined and coated pipe will be used for the conveyance of water.

These specifications include steel made either in accordance with ASTM A 53 or in accordance with these specifications.

The pipe shall be furnished in straight sections or special sections, with interior cement-mortar lining and an exterior reinforced cement-mortar coating with coal-tar enamel undercoat, reinforced cement-mortar coating with polyolefin undercoat, polyolefin coating, or as specified in the order.

2. **General Requirements**:

* a. **National Standards**: All standards and specifications referred to in these specifications shall be as last revised, unless stated otherwise in these specifications. The pipe furnished under these specifications shall be constructed and tested to meet all of the applicable requirements of ASTM, ASME, AWWA, API, AWS, and SSPWC Standards. In case of conflict, the Department's specifications shall govern.

b. **Sections**:

(1) **Straight Sections**: Straight sections shall be fabricated from steel plate joined together by the submerged arc-welding process.

(2) **Special Sections**: Mitered bevels, angles, branching pipe, tapered sections, and other special sections shall be fabricated from steel plate joined together either by the submerged arc-welding process or by the shielded metal arc-welding process.

Note: Asterisk (*) indicates changes in the paragraph.

c. **Definitions**: Under these specifications, the following definitions shall apply:

(1) **Butt Joint**: Butt joint is a joint between 2 members lying approximately in the same plane.

(2) **Butt Weld**: Butt weld is a weld whose throat lies in a plane disposed approximately 90 degrees with respect to the surfaces of not less than one of the parts joined. The size of a butt weld shall be expressed in terms of its net or unreinforced throat dimension in inches. A double welded butt joint is one in which the filler metal is added to both sides. A single welded butt joint is one in which the filler metal is added to one side only.

(3) **Filler Metal**: Filler metal is the metal to be added in making a weld.

(4) **Fusion**: Fusion is the melting together of a filler metal and base metal.

(5) **Fillet Weld**: Fillet weld is a weld approximately triangular in cross section joining 2 surfaces approximately at right angles to each other.

(6) **Shielded Metal Arc Welding**: An arc-welding process wherein coalescence is produced by heating with an electric arc between a covered metal electrode and the work. Shielding is obtained from decomposition of the electrode covering. Pressure is not used and filler metal is obtained from the electrode.

(7) **Submerged Arc Welding**: An arc-welding process wherein coalescence is produced by heating with an electric arc or arcs between a bare metal electrode or electrodes and the work. The welding is shielded by a blanket of granular, fusible material on the work. Pressure is not used and filler metal is obtained from the electrode and sometimes from a supplementary welding rod.

d. **Material**: All material shall be of the quality specified. Any plate or fabricated pipe with scars or injuries from hammering, pits greater than one inch in diameter and deeper than 1/16 inch, laminations greater than 1/32 inch in depth, or any other physical defects that cannot be corrected by welding so as to restore the designed strength will be rejected.

e. **Arc Welding Equipment**:

(1) **Machines**: Generators and transformers shall be designed expressly for welding, capable of delivering substantially constant current, and be adjustable through a range ample for the requirements of the work. Generators and transformers shall be provided with devices for controlling the

welding current and arc voltage and with meters indicating the amount of each at all times.

(2) **Automatic Welding Heads:** Automatic welding heads with auxiliary handling equipment to provide control of electrode speed and welding arc shall be subject to the requirements of these specifications.

f. Drawings: The following drawings are a part of these specifications:

A-3821.....Welded Slip Joints

A-1867.....Weld Test Specimens

3. Description of Steel Pipe:

a. General: The steel pipe shall be in accordance with either one of the following:

* (1) Electric-resistance, welded steel pipe meeting the requirements of ASTM A 53, Type E, Grade A, except that Subarticle 16.3 is replaced with the following:

"Thickness: The pipe wall thickness, as measured on inspection, shall neither be less than 3 percent nor greater than 2 percent of the pipe wall thickness as specified in the order."

Grade B pipe will be acceptable, provided the pipe meets the physical requirements of Grade A, and with a maximum Carbon Equivalent (CE) value of 0.33%. The CE shall be determined as follows:

$$CE = \%C + \frac{\%Mn}{6} + \frac{\%Cr+\%Mo+\%V}{5} + \frac{\%Ni+\%Cu}{15}$$

The pipe shall meet the requirements of Subarticles 3d through 3g of these specifications. The hydrostatic test specified in Subarticle 6c of these specifications shall not apply to pipe furnished in accordance with ASTM A 53.

(2) Steel pipe meeting the requirements of Subarticles 3b through 3h.

b. **Steel Plate:**

(1) Steel plate shall meet the requirements of ASTM A 283, Grade C, or ASTM A 570, Grade 30, except as follows:

(a) That portion of Table 2, Tensile Requirements, of ASTM A 570 relating to thickness, now reading:

"0.2299 to 0.0972, in., incl."

is changed to read:

"0.375 to 0.0972, in., incl."

(b) That portion of Section 8.1 of ASTM A 570 relating to the number of tests now reading:

"Two tension and 2 bend tests shall be made from each heat or lot of 50 tons"

is changed to read:

"One tensile test specimen shall be taken from the approximate center lap; and one tensile test specimen and one bend test specimen shall be taken from the outer lap of the coil. The maximum tensile strength of the specimen taken from the outer lap of the coil shall not exceed 70,000 psi."

(2) Capped or rimmed steels or other such non-killed steels shall not be used.

(3) Steel plate shall be of the specified nominal thickness with a maximum allowable variation of 0.01 inch less than the specified thickness.

(4) The Contractor shall furnish the Department 3 certified copies of mill test reports. Mill test reports shall show results of the chemical and physical tests made on each heat of steel representing the steel plate furnished under these specifications.

(5) The Engineer may require the Contractor to furnish specimen plates of the steel to be used in the fabrication of the pipe. Specimen plates shall be large enough to provide the number of test specimens required in the plate specifications. Should any test specimen fail to meet the requirements of the plate specifications, a second specimen plate shall be furnished. Should any one test specimen from the second specimen plate fail then all plates furnished from the same heat number will be rejected. Tests of these specimens will be made by the Department. The Department will charge the Contractor for all expenses incurred in making the second test.

(6) Plate will be subject to inspection, testing, and approval of the Engineer as to compliance with these specifications prior to fabrication of pipe.

c. **Diameter of Pipe:** Pipe size may be specified by either the inside diameter or the outside diameter. Pipe shall be manufactured with the diameter specified subject to the tolerances of these specifications. The diameter specified shall be the nominal diameter. The inside diameter of pipe whose outside diameter is specified shall be the nominal outside diameter minus twice the nominal plate thickness. The outside diameter of pipe whose inside diameter is specified shall be the nominal inside diameter plus twice the nominal plate thickness.

d. **Filler Metal:** The filler metal used in the automatic welding process shall be comparable to and compatible with the base material in its metallurgical properties and mechanical properties. Electrodes for manual welding shall meet the requirements of AWS 5.1, Classification E6010 or E70 Low Hydrogen Series.

e. **Lengths of Sections:** All straight pipe sections shall be furnished in specified lengths. The Department shall have the right to specify shorter sections for closures and proper location of special sections.

f. **Ends of Sections:** Ends of straight pipe sections and special sections shall be of the following types as shown on the drawings:

(1) Ends with slip joints for field welding.

(2) Plain or beveled ends for butt welding.

(3) Plain ends for butt straps.

(4) Ends for mechanically coupled field joints.

g. **Longitudinal and Girth Seams:** Pipe less than 36 inches in diameter shall be fabricated with not more than 3 longitudinal seams. Pipe 36 inches in diameter and larger shall be fabricated with not more than 3 longitudinal seams and not more than 3 girth seams in each section.

h. **Special Sections:** Curves, tees, branches, transitions, adaptors, fittings, and other special sections shall be fabricated in accordance with the drawings.

i. **Double Butt-Welded Coil Ends:** Coil ends may be welded together provided they are made with a full penetration double-butt weld and placed at a distance greater than 12 inches from the ends of the pipe. Not more than one coil end weld nor more than a combined total of 3 girth welds and coil end welds shall be used in any one pipe section.

4. **Fabrication:**

a. **General:** Pipe fabricated of steel plate shall be shaped to the required curvature and joined by welding. Longitudinal edges shall be lap broken prior to shaping. The desired curvature may be obtained by rolling or forming in a press. The specified diameter of the plate shall not be obtained by hammering. Plates will be inspected before longitudinal seams are welded.

b. **Preparation of Plate Edges for Welding:**

(1) Edges of plates to be joined by automatic welding shall be cut or formed to the shape required for the particular welding process. Edges of plates to be joined by hand welding shall be formed to the shape shown on drawings or in accordance with the Contractor's drawings reviewed with no exceptions noted.

(2) The width of the plate before rolling shall not vary by more than 1/16 inch from the width required to obtain the required circumference.

(3) Special sections having abutting plates of different thicknesses shall have the thicker plate prepared so that the apex of the weld groove shall correspond with that of the thinner plate.

(4) All plates shall be cut to size, with all edges straight, uniform, smooth, and free from scale and slag accumulations. All plate edges and surfaces adjacent to the edges to be welded shall be cleaned of oil, grease, rust, and mill scale by wire brushing, sandblasting, or other equivalent methods suitable for the intended purpose.

c. **Lap Breaking:** The longitudinal edges of all plates shall be lap broken prior to the plate forming operation. The lap breaking operation shall be either by rolls or by a press using dies. The lap breaking operation shall produce a true, uniform curve at the edge of the plate equal to the curve of the pipe shell.

d. **Forming of Plate:** Plates shall be formed to the proper curvature either by rolling or pressing. The forming operation shall produce a true, uniform, circular curve. Plates will be inspected after forming. Defective plates will be rejected. Plates shall be formed before the seams are welded.

e. **Fitting Up:** The plates being welded shall be accurately matched and retained in position during the welding operation. The method employed shall result in a finished pipe of circular cross section throughout its entire length. Abutting edges of plate, after welding, shall not have a radial offset (misalignment) greater than 1/32 inch. Tack welds may be used to

hold the edges in position, provided the tack weld thickness will permit the tack weld to become thoroughly fused and part of the strength weld in the welding operation.

f. **Qualification for Welders and Welding Operator:**

(1) All welders and welding operators shall be qualified under the applicable provisions of the standard qualification procedure of the ASME Boiler and Pressure Vessel Code, Section IX.

(2) The Engineer will have the right at any time to call for and witness the making of test specimens by any welder in accordance with these specifications. The tests shall be at the Contractor's own expense.

g. **Welding Procedure Specifications:** Welding procedure specifications shall be furnished to the Engineer prior to the welding of pipe. The specifications shall specify the type of plate edge preparation, welding method, arc-voltage, arc-amperes, travel speed, wire size and type, flux type, and all other procedures necessary to make the weld.

h. **Welding:**

(1) All welds shall be made by a shielded metal arc-welding or submerged arc-welding process. Where required by the Engineer, inspection of the background area by the Contractor shall be made by the Dye Penetrant Method and will be witnessed by the Engineer.

(2) Each layer of welded metal shall be thoroughly cleaned before additional filler metal is applied to its surface. Finished weld bead shall be central to the seam, and the finished joint shall be free from depressions, burrs, undercut edges, irregularities, and valleys. The inner surface of the pipe shall be free from burrs and other irregularities resulting from welding.

(3) The welding process shall produce complete fusion of base metal and filler metal, free from cracks, oxides, and gas pockets within the limits set forth under these specifications.

(4) When welding is interrupted, the weld shall be cleaned and flux redistributed before work is resumed.

(5) The outside weld bead shall be not less than 1/16 inch nor more than 1/8 inch in height above the plate surface. That portion of the outside weld bead exceeding 1/8 inch in height shall be removed by grinding or chipping. All longitudinal and girth welds on the inside of the pipe shall be ground or chipped down so that the height of the weld bead shall be not more than 1/16 inch above the plate surface. The weld

bead shall not be ground or chipped below the surface of the plate.

i. **Correction to Welds:**

(1) Welds found deficient in dimensions, but not in quality, shall be enlarged by additional welding after thoroughly cleaning the surfaces of previously deposited metal and the adjoining plate. When subsequent work has made the weld inaccessible or has caused new conditions which would make such enlargement inadvisable, the original conditions shall be restored by removal of welds, members, or both, before enlarging the deficient weld.

(2) A defective weld or a weld made contrary to the provisions of these specifications shall be removed and remade throughout its length. The defective weld shall be removed by chipping, cutting, or melting throughout its depth to clean base metal. The melting or chipping shall not extend into the base metal beyond the heat-affected zone. When more than 5 percent of the total length of original weld per pipe section is defective, the section will be rejected.

(3) Burnt metal resulting from melting shall be removed by chipping or grinding to expose clean sound metal.

(4) Overheated filler metal and the overheated base metal adjoining it shall be removed and replaced by new filler metal properly applied. Plate damaged by overheating which cannot be satisfactorily repaired by filler metal shall be replaced.

(5) Repair welds shall be ground to the existing surface contours.

j. **Automatic Welding:**

(1) All longitudinal, spiral, and girth seams of straight pipe sections and special sections, when practicable, shall be welded by an automatic welding process.

(2) Prior to the start of the automatic welding production for each pipe diameter and plate thickness, the Contractor shall fabricate a section of welded steel cylinder of sufficient length to establish a welding procedure. As directed by the Engineer, weld tests shall be taken of 2 locations from this section. Weld tests will include one reduced section tensile test, 2 guided bend tests, and one spot x-ray at each location. The tests shall be conducted by the Contractor and the results furnished to the Engineer for approval as to compliance with the requirements of these specifications. Should any of the tests fail to meet the requirements of these specifications, corrective adjustments shall be made to the welding procedure, and another test cylinder of sufficient length to establish a

revised test procedure shall be made and tested as described above. This procedure shall be continued until the welding procedure meets the requirements of these specifications. Following the approval of a welding procedure, the Contractor may proceed with production.

(3) The Contractor shall prepare and submit to the Engineer the welding procedure established from the welding tests which shall include the type of plate edge preparation, welding method, arc-voltage, arc-amperes, travel speed, wire size and type, flux type, and all other procedures as required. This procedure specification shall be used as a guide in the fabrication of pipe during each shift's production. Minor adjustments may be made to the procedure as necessary to accommodate production variations provided the Engineer is notified of such change.

k. Hand Welding:

(1) Hand welding may be done only when it is not possible to use an automatic welding machine. Hand welding may be done on straight pipe sections to make tack welds, to repair structural defects in the plate, and to repair automatic machine welds, provided the hand welds meet the same testing requirements as for automatic welding.

(2) Fillet welds shall fully penetrate into the corner. Cut back of the plate edges of fillet welds shall not be done. Butt welds shall be made by adding filler metal to both sides of the joint. The backside of the weld shall be chipped out, and all slag and unsound metal removed before additional weld material is placed. Filler metal shall be deposited in successive layers so that there will be a minimum number of passes as there are complete multiples of 1/8 inch in the plate thickness.

l. Preparation of Ends of Pipe:

(1) **Slip Joints for Field Welding:** Pipe ends with slip joints shall be prepared in accordance with Drawing A-3821. The bell ends shall be pressed or rolled to the required shape without hammering. The length of the straight portion of the bell shall be not less than 3 inches for pipe sizes larger than 24 inches and not less than 1-1/2 inches for pipe sizes 24 inches and smaller.

(2) **Ends for Butt Welding:** Ends of pipe sections for butt welds shall be prepared in accordance with these specifications and as shown on the drawings.

(3) **Ends for Butt Straps:** Plain end pipe for butt straps shall have the outside longitudinal welds ground flush with the plate surface for a distance of 6 inches back from the ends.

(4) **Ends for Mechanically-Coupled Field Joints:** Ends for mechanically-coupled field joints shall be as specified. The outside of plain end pipe shall be free from objectionable surface defects and shall have the longitudinal welds ground flush with the plate surface for a distance of 10 inches back from the ends. Plain, grooved, or banded ends shall be prepared to fit the type of mechanical couplings to be used.

5. **Tolerances:**

a. **Tolerance for Circumference, Roundness, Joints, Straightness, Length, and Ends:** Each section of pipe shall meet the tolerances set forth below, provided, however, that such tolerances do not interfere with the making of the joints.

(1) **Circumference:**

(a) The circumference of the pipe shall be as computed from the nominal diameter.

(b) The measured circumference of the pipe within 8 inches from each end shall not be more than 1/8 inch greater than the computed circumference nor 1/16 inch less than the computed circumference.

(c) The measured circumference of the pipe, except within 8 inches from each end, shall not be more than 9/32 inch greater than the computed circumference nor 3/32 inch less than the computed circumference.

(2) **Field-Welded Slip Joints:** The inside diameter of the bell of a slip joint shall be between 1/32 inch and 1/16 inch greater than the outside diameter of the plain end.

(3) **Roundness:**

(a) Within 8 inches from the ends, the pipe shall not be out-of-round on any diameter by more than plus or minus 0.4 percent of the specified nominal diameter.

(b) Except within 8 inches from the ends, the pipe shall not be out-of-round on any diameter by more than plus or minus one percent of the specified diameter.

(c) Out-of-roundness shall be measured radially on the inside or outside of the pipe with a segmental circular template. The template shall have an arc length equal to 10 percent of the pipe circumference and a radius equal to one-half the specified inside or outside pipe or bell diameter. The maximum permissible radial deviation between the pipe shell and the template shall be 0.5 percent of the specified diameter but not more than 0.25 inch.

(d) Pipe sections that exceed these roundness tolerances may be reconditioned by rolling or by pressure. Reconditioning shall not be done by hammering. Reconditioned sections will be reinspected and retested hydraulically.

(4) **Straightness:** The alignment of finished pipe sections shall be straight with walls parallel to the axis of the pipe. Pipe sections with a misalignment from a straight line parallel to the pipe axis exceeding 1/8 inch for 10 feet of pipe length will be rejected.

(5) **Length:** Length of straight pipe sections shall not vary from the specified length by more than 2 inches. Length of special sections shall not vary from the specified length by more than 1/8 inch.

(6) **Ends:** The ends of pipe sections shall not vary more than 1/8 inch at any point from a plane at right angles to the axis of the pipe.

6. **Factory Inspection and Testing of Steel Pipe:**

a. **General:** Any or all tests provided herein to determine compliance with these specifications shall be made under the supervision of and have the approval of the Engineer as to compliance with these specifications. The Contractor shall notify the Engineer a sufficient time in advance of the manufacture or production of materials to be furnished under this contract in order that the Engineer may arrange for mill or factory inspection and testing of same. Materials to be tested and inspected by the Engineer shall not be released for shipment until they have satisfactorily passed the Engineer's inspection and test or until notice has been received from the Engineer that such inspection and testing will not be required. The Contractor shall also furnish to the Engineer, 3 certified copies of all required factory and mill test reports. Any such tests or inspections shall not relieve the Contractor of obligations under the contract.

The Contractor shall bear all expenses of all factory tests on all material furnished. The Department will bear all expenses of final acceptance tests excepting salaries and expenses of the manufacturer's representatives during such tests.

The Engineer shall be notified 5 calendar days prior to the start of pipe fabrication. Pipe shall be fabricated only when the Engineer is present. This requirement may be waived by the Department.

The Engineer will reject any or all pipe sections that do not meet the requirements of these specifications.

The Engineer shall have free access to those parts of all plants that furnish materials or perform work under these specifications.

The Contractor shall furnish the Engineer reasonable facilities and space, without charge, for inspecting, testing, and obtaining information respecting the character of material used and the progress and manner of the work.

b. Weld Tests of Steel Pipe:

(1) General: One set of weld tests of production welds shall be prepared and tested from each shift's production run or 600 linear feet of weld, whichever is smaller, as designated by the Engineer.

(2) Specimen Plates: Test specimen plates shall be large enough to provide the test specimens shown on Drawing A-1867. The pipe area from which the specimen plate is cut shall be repaired by inserting a plate of the same material, thickness, and curvature as the pipe and shall be butt welded in place.

(3) Tests: The test requirements shall be as follows:

(a) Results of Reduced Section Tensile Test: The yield point and ultimate tensile strength shall be not less than the minimum of the specified tensile range of the plate used.

(b) Guided Bend Test: Bend tests shall be performed on both root and face weld specimens. The specimen shall be bent cold without fracture 180 degress around a pin or mandrel, having a diameter 3 times the thickness of the plate, and shall show an elongation of not less than 20 percent across the weld.

(c) Radiographic Test: A 4-1/2-inch by 17-inch spot x-ray shall be taken at a location directed by the Engineer. Procedures and interpretation shall be in accordance with ASME Boiler and Pressure Vessel Code, Section 8, Division I, Part UW51.

(4) Porosity: The maximum acceptable porosity shall be as set forth in Appendix IV of the ASME Boiler and Pressure Vessel Code.

(5) Retest of Welds: Additional weld tests may be required should there be any indication that an unsatisfactory weld has been made. These weld tests shall be made and the results approved by the Engineer as to compliance with these specifications prior to beginning another shift's production.

Retest of welds shall be performed entirely at the Contractor's own expense and shall be made and approved before beginnning the next shift's production in accordance with the following:

(a) Should any of the weld tests taken from the shift's production fail to meet any of the requirements of these specifications, one additional set of weld tests shall be made from each of the adjoining pipe sections.

(b) Should any of the additional tests fail to meet the requirements of these specifications, all pipe sections of that shift's production run will be rejected.

(c) If the additional tests meet the requirements of these specifications, the remaining pipe of the shift's production run shall be deemed acceptable. The original pipe may be reconditioned and resubmitted for inspection and additional tests shall be made on the original pipe.

(6) **Reinspection of Pipe Ends:** A Section of pipe or any portion of a pipe belled, sized, or otherwise deformed after the hydrostatic test shall have the weld at the ends reinspected in accordance with the API Std. 5LX, Section 7, Paragraphs 7.14 through 7.17, inclusive.

c. Hydrostatic Tests of Steel Pipe:

(1) **General:** All straight pipe sections, branching pipe sections, tapered pipe sections, and special sections shall be hydrostatically tested. Mitered bends made from straight sections previously tested may have the girth welds examined radiographically in lieu of a hydrostatic test. In all cases, pipe requiring repairs shall be retested in the manner by which the defect was detected.

(2) **Procedure:** The pipe or special section shall be completely filled with water. Vents shall be provided at the high points for the air to escape while the pipe is being filled. The required pressure shall be maintained for not less than 2 minutes. While under pressure the welded seams shall be inspected for leaks, and each leak location plainly marked. Any section having less than one leak for each 5 feet of welded seam shall have the leaks repaired by chipping the weld and rewelding by hand, after which the pipe shall be retested hydrostatically. On a retest, the pipe section shall not have any leaks in the welded seams, and if any appear, the section will be rejected. Any section showing more than one leak for each 5 feet of welded seam will be rejected. Leaks shall not be closed by means of a caulking tool. Accepted pipe sections will be marked by the Engineer with a legible identification mark.

(3) **Straight Pipe Sections:** Each straight pipe section shall be tested hydrostatically to a test pressure determined by the following formula:

$$P = \frac{2st}{D}$$

where

P = Pressure in psi.
s = Allowable fiber stress = 85% of specified minimum yield strength.
t = Wall thickness of pipe in inches.
D = Outside diameter in inches of straight pipe section and the larger outside diameter of tapered sections unless otherwise specified.

(4) **Branch Connections, Tapered Pipe Sections, and Special Sections:** Each branch pipe, tapered pipe section, and special section shall be hydrostatically tested after fabrication to a pressure of 1-1/2 times the design operating pressure at the point of installation or 100 psi, whichever is higher. Branch connections, tapered pipe sections, and special sections shall be fabricated from straight pipe sections which have previously been tested in accordance with the requirements specified herein for straight pipe sections.

7. **Cleaning and Delivery of Steel Pipe Lining and Coating Processes:**

a. **Cleaning of Steel Pipe:** Each section of pipe shall be thoroughly cleaned of loose mill scale, paint, oil, grease, burned flux, molten material, and other foreign substances, both inside and outside.

b. **Delivery of Steel Pipe:** The steel pipe shall be braced in each end of pipe section when required to prevent damage to the pipe by excessive deformation of the pipe during handling and delivery.

c. **Finished Steel Pipe at Delivery Destination:**

(1) All steel pipe sections or special sections that show dents, kinks, abrupt changes of curvature other than specified, or injuries at the delivery destination will be subject to rejection. All pipe sections or special sections that have been dropped from a truck or crane prior to completion of delivery will be subject to rejection. The Contractor shall replace, at the Contractor's own expense, such rejected section with an undamaged section or may recondition the rejected section.

(2) Pipe rejected because of substantial damage may be reconditioned by rolling or by pressure, but not by hammering, if the pipe can be returned to its design strength and specified characteristics. Pipe rejected because of gouges, scars, or other minor injuries shall be reconditioned so as to return the pipe to its design strength and specified characteristics in a manner approved by the Engineer. Where reconditioning has required removal and replacement of a weld or reshaping by rolling, the reconditioned area shall be inspected by spot radiographs or retested hydrostatically by the Contractor.

8. **Lining and Coating:**

a. **Cement-Mortar Lining:** The interior pipe surfaces shall have cement-mortar lining in accordance with AWWA C205, with the following modifications:

(1) **Lining:** The lining shall be either brought flush or held back from the spigot or plain end of the pipe and shall be held back from the bell end the distance shown on Drawing A-3821 in accordance with the size of pipe to be cement lined.

(2) **Cement:** Cement shall meet the requirements of the Department's Standard Specification G 331 for portland cement, Type II.

(3) **Sand:** Sand shall meet the requirements of AWWA C205.

(4) **Cleaning:** Immediately prior to the application of the lining, the pipe shall be cleaned of all slime, dirt, loose rust, loose mill scale, and all other foreign materials.

(5) **Finish:** After the mortar is distributed to a uniform thickness, the rotation speed shall be increased to produce a dense mortar with a smooth surface and a minimum of shrinkage.

b. **Coal-Tar Enamel Undercoat:** When specified in the order, the coal-tar enamel undercoat shall be in accordance with AWWA C203, Section 2, Coal-Tar Enamel, Hot-Applied. The undercoat shall be held back the following distances from the pipe ends:

	For Pipe Sizes	
Pipe Ends	4 thru 24 (Inches)	Over 24 (Inches)
Spigot or plain	5-1/2	7
Bell	4	4

c. **Reinforced Cement-Mortar Coating:** When specified in the order, the exterior surfaces of the pipe shall be protected with a reinforced cement-mortar coating in accordance with AWWA C205, with the following modifications:

(1) **Cement:** Cement shall meet the requirements of the Department's Standard Specifications G 331 for portland cement, Type II.

(2) **Sand:** Sand shall meet the requirements of AWWA C205.

(3) **Curing:** As soon as the coating has set sufficiently for the pipe to be moved, the pipe shall be kept moist for a minimum period of 14 days by continuous water spraying or by intermittent water spraying while keeping the pipe covered with canvas or burlap.

The cement-mortar coating shall be brought to within the following distances of the pipe ends:

Pipe Ends	For Pipe Sizes 4 thru 24 (Inches)	Over 24 (Inches)
Spigot or plain	7-1/2	9
Bell	6	6

The wire reinforcement shall extend to the end of the cement-mortar coating but shall not project outside of the coating.

d. **Polyolefin Coating:**

(1) **General:** When specified in the order, the exterior surfaces of the pipe shall be coated with a multilayer polyolefin coating system. The coating system shall be one of the following systems each as modified herein:

(a) Polyken YG111 System.

(b) Plexco X-TRU-COAT System.

(2) **Materials and Properties:**

(a) **Polyken YG111 System:** The Polyken YG111 System shall be a multilayer polyethylene system consisting of one layer of pipeline coating primer, Non-Flammable No. 929-S; one layer of pipeline coating tape, No. 989 Innerwrap 20; and one or more layers of pipeline coating, No. 956 Outerwrap 30.

[1] **Primer:** The Non-Flammable No. 929-S primer shall be fast drying and shall form an instantaneous, firm

bond when the adhesive on the innerwrap tape comes into contact with the primed pipe surface. For optimum bonding, the primer shall be dry-to-touch at the time the tape innerwrap is applied over the primer. The physical properties of the primer shall be as follows:

Physical Properties	Requirements
Total solids:	
Material	Rubber and synthetic resins
Percent, min	10.6
Nominal weight per gallon, pounds, min	10.65
Viscosity	"Thin syrup"
Flash point	None
Drying time, sec, max	60

[2] **Pipeline Coating Tape (Innerwrap):** The No. 989 Innerwrap 20 tape shall consist of a polyethylene backing with a butyl-based adhesive laminated to one side of the backing film. The polyethylene backing film and adhesive shall be made by the calendaring system to assure maximum bonding of the adhesive to the backing film. The adhesive shall be formulated to form an instantaneous, firm bond when it contacts the primed pipe surface. The physical and performance properties of the innerwrap tape shall be as follows:

Physical Properties	ASTM Method	Requirements
Total thickness, nominal, mils	---	20
Backing film:		
Material	---	Low- or high-density polyethylene
Color	---	Black
Thickness, nominal, mils	---	9
Adhesive:		
Material	---	Butyl rubber and synthetic resin
Thickness, nominal, mils	---	11

Performance Properties	ASTM Method	Requirements
Tensile strength, lb/in width, min	D 1000	30
Elongation, percent, min	D 1000	200
Adhesion to primed steel, oz/in width, min	D 1000	200
Dielectric strength, volts/ mil of thickness, min	D 149	100
Water transmission rate, g/100 sq in. in 24 hours	E 96	0.01 to 0.2
Operating temperature for normal service	---	-30F to +200F

[3] **Pipeline Coating Tape (Outerwrap):** The No. 956 Outerwrap 30 tape shall consist of a polyethylene backing film with a butyl-based adhesive laminated to one side of the backing film. The polyethylene backing film and the butyl adhesive shall be made by the calendaring process to assure maximum bond of the adhesive to the backing film. The adhesive on the outerwrap shall form a firm, continuous bond to the backing film of the innerwrap tape. The physical and performance properties of the outerwrap tape shall be as follows:

Physical Properties	ASTM Method	Requirements
Total thickness, nominal, mils	---	30
Backing film:		
Material	---	Low- or high-density polyethylene
Color	---	White
Thickness, nominal, mils	---	25
Adhesive:		
Material	---	Butyl rubber and synthetic resin
Thickness, nominal, mils	---	5

Performance Properties	ASTM Method	Requirements
Tensile strength, lb/in width, min	D 1000	55
Elongation, percent, min	D 1000	200
Adhesion to backing, oz/in width, min	D 1000	78
Dielectric strength, volts/ mil thickness, min	D 149	1000
Water vapor transmission rate, g/sq in. in 24 hours, max	E 96	---
Operating temperature for normal service	---	-30F to +200F

(b) **Plexco X-TRU-COAT System:** The Plexco X- TRU-COAT System shall be a multilayer system consisting of a layer of modified rubber-blend primer adhesive and an extruded jacket of polyethylene material.

[1] **Rubber-Blend Adhesive:** The physical and performance properties of the rubber-blend primer adhesive shall be as follows:

Physical Properties	ASTM Method	Requirements
Thickness, nominal, mils all pipe class	---	10
Compound:		
Material	---	Modified rubber-blend
Thermoplastic:		
Color	---	Black

* [2] **Polyethylene Extruded Jacket:** The physical and performance properties of the extruded polyethylene jacket shall be as follows:

Physical Properties	ASTM Method	Requirements
Thickness, nominal, mils all pipe sizes	---	70 ± 10
Jacket:		
Material	---	Prime, virgin, high-density
Polyethylene:		
Color	---	Yellow

Performance Properties	ASTM Method	Requirements
Tensile strength, psi, min	D 638	3000
Elongation, percent, min	D 638	100
Water vapor transmission rate, g/100 sq in. in 25 hours, max	E 96	0.0001
Dielectric strength, volts/mil of thickness, min	D 149	1000
Operating temperature for normal service	---	-40F to +150F

(3) **Surface Preparation:** The pipe shall be dried by preheating prior to cleaning. The exterior surfaces to be coated shall be thoroughly cleaned of all, grease, oil, rust, mill scale, dirt, and all other foreign substances. Oil or grease shall be removed before mechanical cleaning by swabbing the surfaces with Chlorothane N.U. The exterior surface of the pipe shall then be mechanically cleaned with sand or grit or by shot blasting in accordance with Steel Structures Painting Specifications No. SP6. Pipe sections shall then be cleaned of all steel shot, sand, or dust remaining on the exterior or interior surfaces.

Following cleaning, each length of pipe shall be inspected for dents, gouges, grooves, and slivers. All defects shall be repaired or corrected to provide proper bond and integrity of the coating system to be applied.

At the Contractor's option, preparation of steel surfaces and the subsequent coating application may take place before or after the application of the cement-mortar lining; however, any damage resulting to the lining or coating, by reason of the sequence of their application, shall be repaired.

(4) **Coating Application:**

(a) **Hold Backs:** Pipe ends shall be protected from any contact with primer, adhesive, or coating for the specified distances. The method of protecting such areas shall be subject to the approval of the Engineer as to compliance with this requirement.

Pipe Ends	For Pipe Sizes 4 thru 24 (Inches)	Over 24 (Inches)
Spigot or plain	5-1/2	7
Bell	4	4

(b) **Polyken YG111 System:**

[1] **Primer:** Primer shall be applied to the cleaned pipe surface as a thin film at a coverage rate of approximately one gallon per 800 square feet of tape applied. The primer shall be thoroughly mixed prior to application and shall be agitated during application to prevent segregation. The primer may be applied by spray or with other suitable methods to obtain uniform coverage on the pipe surface. The No. 9295 primer may be thinned with Chlorothane N.U. only when necessary to restore the primer to the original content of the solids. Thinning shall not exceed one part primer to one part thinner. The primed pipe surface shall be free of all cleaning grit, dirt, rust, or other substances that would prevent intimate contact with the innerwrap tape application.

[2] **Innerwrap:** The No. 989 Innerwrap 20 tape shall be applied with suitable mechanical equipment that will attach the tape to the pipe with a minimum of 10 pounds of tension per inch of tape width. The application shall produce a smooth, wrinkle-free covering. The tape shall be applied at a minimum roll temperature of 70F. Optimum roll temperature during application is 70F to 95F. The tape shall be spirally applied with a one-inch overlap and plus 1/4-inch tolerance. The end lap of each new roll shall overlap the end of the preceeding roll by a minimum of 6 inches. The end lap shall be hand-applied or applied with suitable mechanical equipment to produce a wrinkle-free lap joint. The spiral angle shall parallel the spiral angle of the previous roll. Machine adjustments, including brake tension, shall be made and maintained to continuously accomplish a uniform, tight, smooth, wrinkle-free coating. The tape-width drawdown shall not exceed 5/8 inch.

[3] **Outerwrap:** The No. 956 Outerwrap 30 tape shall be applied simultaneously and in the same manner as the innerwrap tape. The spiral lap joints of the 2 tapes shall not occur on top of each other. The outerwrap tape shall be applied under 12 to 14 pounds of tension per inch of tape width.

(c) **Plexco X-TRU-COAT System:**

[1] **Adhesive:** As a part of a continuous operation and immediately following cleaning and surface preparation, the modified rubber-blend compound shall be applied to the pipe surface with a thickness of 10 mils. The temperature of the pipe surface and the thermoplastic adhesive shall be maintained at levels to insure optimum adhesion and continuous coverage of the cleaned pipe surface.

[2] **Polyethylene Extruded Jacket:** As a part of a continuous operation and immediately following the adhesive application, the adhesive coated pipe shall be moved through a crosshead extrusion die for application of the polyethylene jacket. The speed of the pipe shall be carefully controlled to insure a uniform, void free jacket thickness. Temperature of the polyethylene material shall be carefully controlled to provide the required thickness and physical properties. Following the coating operation, the pipe may be cooled by water quenching. If insufficient clearance through the extrusion die prohibits extrusion coating of pipe with belled ends, the pipe may be belled after coating. If belling is done after coating, any damage to the coating or cement lining shall be repaired.

9. **Inspection of the Cement-Mortar Lined and Coated Welded Steel Pipe:**

a. **General:** The Department's Engineer shall at all times have the right to inspect the work in the course of application of the lining and coating to the welded steel pipe and make such tests from time to time as may be advisable providing no delay in production of acceptable materials or equipment is caused thereby. The Contractor shall furnish, at the Contractor's own expense, reasonable facilities including tools and instruments for so doing and for obtaining such information as the Engineer desires respecting the progress and manner of the work and the character of the materials used. However, final inspection will be made upon receipt at the Department's specified receiving points; and, if any materials or equipment do not meet the requirements of these specifications, the lot or any faulty portion thereof may be rejected.

Before offering a lot for inspection, the manufacturer shall eliminate any portion which is defective or does not meet the requirements of the specifications. All expense of the initial acceptance test will be borne by the Department. The expense of subsequent tests due to failure of

materials or equipment first offered will be charged against the Contractor. The fact that the materials or equipment have been successfully inspected, tested, and accepted by the Engineer shall not relieve the Contractor of responsibility in the case of later discovery of flaws or defects.

b. **Test of Coating System:** Upon completion of the coating or extrusion-coating operation, each length of coated pipe shall be visually inspected and shall have the entire coated surface tested with an electrical holiday tester for holidays, thin spots, or damage. The tester shall be operated at the following minimum voltages:

Coating System	Volts (Minimum)
Polyken YG111	6,000
Plexco X-TRU-COAT	10,000

All testing shall be performed in the presence of the Engineer.

c. **Repairs:** All holidays and other defects observed or holidays detected during inspection shall be repaired.

10. **Delivery of the Cement-Mortar Lined and Coated Welded Steel Pipe:** The bracing, transporting, and handling of the lined and coated pipe shall be in accordance with Subarticle 7b.

11. **Shipping and Handling of Lined and Coated Welded Steel Pipe:** The lined and coated welded steel pipe shall be handled, stored, and shipped by the Contractor in a manner that will prevent damage to the coating, lining, pipe, and pipe ends. The pipe shall be hoisted by means of wide belt slings. Chains, cables, tongs, hooks, or other devices likely to cause damage to the lining or coating shall not be used. Pipe shipped from the coating yard shall employ sufficient dunnage, covers, padding, and banding to preserve the integrity of the pipe coating during shipment to the point of receipt by the Department.

(END OF STANDARD SPECIFICATIONS)

Notes to Engineer:

a. **Formal Contracts:** When these standard specifications are used in formal contracts, add the information shown on the attached Additional Information to Division C2 and delete Article 8 from the General Conditions.

b. **Informal Contracts:** When these standard specifications are used with informal contracts, add the attached Additional Information.

c. **Drawings:** Include Drawings A-3821 and A-1867 as part of the advertised specifications.

d. **Standard Lengths:** The standard length of pipe sizes 4 inches through 16 inches is 18 to 22 feet. The standard length of pipe sizes 20 inches through 36 inches is 30 feet.

DWP STANDARD SIZES

Nominal Size (Inches)	Outside Diameter (Inches)	Wall Thickness (Inches)	Lining	Coating	Type of End	Material Code (FT)
4	4-1/2	1/4	Cem.	Coal Tar/ Cem.	SJ	13-13-477
4	4-1/2	1/4	Cem.	Black	SJ	13-13-404
4	4-1/2	1/4	Cem.	Plastic	SJ	13-13-406
4	4-1/2	1/4	Cem.	Plastic/ Cem.	SJ	13-13-410
6	6-5/8	1/4	Cem.	Coal Tar/ Cem.	SJ	13-16-477
6	6-5/8	1/4	Cem.	Black	SJ	13-16-404
6	6-5/8	1/4	Cem.	Plastic	SJ	13-16-406
6	6-5/8	1/4	Cem.	Plastic/ Cem.	SJ	13-16-410

DWP STANDARD SIZES (Cont.)

Nominal Size (Inches)	Outside Diameter (Inches)	Wall Thickness (Inches)	Lining	Coating	Type of End	Material Code (FT)
8	8-5/8	1/4	Cem.	Coal Tar/ Cem.	SJ	13-17-477
8	8-5/8	1/4	Cem.	Black	SJ	13-17-404
8	8-5/8	1/4	Cem.	Plastic	SJ	13-17-406
8	8-5/8	1/4	Cem.	Plastic/ Cem.	SJ	13-17-410
12	12-3/4	1/4	Cem.	Coal Tar/ Cem.	SJ	13-19-477
12	12-3/4	1/4	Cem.	Black	SJ	13-19-404
12	12-3/4	1/4	Cem.	Plastic	SJ	13-19-406
12	12-3/4	1/4	Cem.	Plastic/ Cem.	SJ	13-19-410
16	16	1/4	Cem.	Coal Tar/ Cem.	SJ	13-22-477
16	16	1/4	Cem	Black	SJ	13-22-404
16	16	1/4	Cem.	Plastic	SJ	13-22-406
16	16	1/4	Cem.	Plastic/ Cem.	SJ	13-22-410
20	20	5/16	Cem.	Coal Tar/ Cem.	SJ	13-24-487
20	20	5/16	Cem.	Black	SJ	13-24-404
20	20	5/16	Cem.	Plastic	SJ	13-24-406
20	20	5/16	Cem.	Plastic/ Cem.	SJ	13-24-410
24	24	5/16	Cem.	Coal Tar/ Cem.	SJ	13-26-487
24	24	5/16	Cem.	Black	SJ	13-26-404
24	24	5/16	Cem.	Plastic	SJ	13-26-406

DWP STANDARD SIZES (Cont.)

Nominal Size (Inches)	Outside Diameter (Inches)	Wall Thickness (Inches)	Lining	Coating	Type of End	Material Code (FT)
24	24	5/16	Cem.	Plastic/ Cem.	SJ	13-26-410
30	30	3/8	Cem.	Coal Tar/ Cem.	SJ	13-28-489
30	30	3/8	Cem.	Black	SJ	13-28-404
30	30	3/8	Cem.	Plastic	SJ	13-28-406
30	30	3/8	Cem.	Plastic/ Cem.	SJ	13-28-410
36	36	3/8	Cem.	Coal Tar/ Cem.	SJ	13-31-489
36	36	3/8	Cem	Black	SJ	13-31-404
36	36	3/8	Cem.	Plastic	SJ	13-31-406
36	36	3/8	Cem.	Plastic/ Cem.	SJ	13-31-410

Wording of Order: Approximately _____ linear feet, pipe, steel, _____ inch OD, electric-fusion, butt-welded _____-inch wall thickness, interior cement-mortar lined, exterior (reinforced cement-mortar coated with coal-tar enamel undercoat), (reinforced cement-mortar coated with polyolefin undercoat), (black), (polyolefin-coated), ends prepared (with slip joints), (plain or beveled for butt welding), (plain for buttstraps), (for mechanically-coupled field joints), furnished in (18-foot to 22-foot), (30-foot) lenghts, in accordance with Department's Standard Specification W 302-R3 (and the attached Additional Information).

Wording of Order: _____each, (curve), (tee), (branch), (transition), (adaptor), (fitting), (complete the description), in accordance with Department's Standard Specifications W 302-R3 and Drawings _____ (and the attached Additional Information).

Unit of Price	Unit of Del.	Standard Packages	Containers

Price Differentials

NONE

Prepared by: C. E. Reuben Engineering Approval MF, RBB, CR, SRR Lawrence McReynolds	Purchasing Approval Richard J M

SECTION F02260 - EXCAVATION SUPPORT AND PROTECTION

PART 1 - GENERAL

1.01 RELATED DOCUMENTS (NOT USED)

1.02 SUMMARY

A. Excavation support and protection to retain excavations and embankments for construction of structures, pipelines, vaults, shafts and pits required for tunneling and horizontal boring and jacking, appurtenances, and connections, and to prevent movement of existing foundations, substructures, and on-grade features and improvements.

B. Pre-manufactured shoring systems and shields designed and intended solely for personnel protection shall not be used for excavation support and protection.

1.03 RELATED SECTIONS (NOT USED)

1.04 REFERENCES

A. Codes:

1. Cal-OSHA, State of California Administrative Code, Title 8, Industrial Relations, Chapter 4, Division of Industrial Safety.

B. American Institute of Steel Construction (AISC), Manual of Steel Construction.

D. American Forest & Paper Association (AF&PA), National Design Specification for Wood Construction.

E. State of California, Department of Transportation, Trenching and Shoring Manual.

1.05 SUBMITTALS

A. Submit the following:

1. Shoring Plan:

a. General:

1) In accordance with Section 6500 of the Labor Code of the State of California, a detailed plan for excavations 5 feet or

more in depth indicating the proposed design for shoring, bracing, sloping, or other provisions to be made for worker protection from the hazard of caving soil during excavation.

2) Each plan shall be a distinct, complete submittal, including calculations, for each excavation configuration. Do not refer to details or calculations submitted for other configurations. Include applicable location by stationing.

3) Each plan shall show how the existing roadway, substructures, and structures influenced by the excavation will be protected.

4) Each plan shall incorporate the traffic requirements, overhead obstructions, substructures, surcharges, and other factors specific to each location.

5) Plans varying from the shoring system standards established by the Cal-OSHA Construction Safety Orders shall be prepared, signed, and stamped by a licensed civil engineer registered in the State of California.

6) If members are spliced, include details and calculations for such splices.

7) Include shoring connection details at corners, change in shoring directions, intersections, change in shoring depth, transition from trench to shafts or pits, and transition between different shoring types.

8) Include details of substructures penetrating the shoring system.

9) Detailed plan for the installation and removal of shoring. Include the following:

a) Procedures for the installation and removal of shoring.

b) Stability of the excavation and installed shoring during excavation and shoring installation.

c) Stability of the shoring system and excavation during removal of the shoring system and backfilling of the excavation.

d) Safety of personnel.

10) Detailed plan for the temporary reconfiguration of the shoring system required for the installation or removal of materials and equipment within the excavation, and shall include the following:

a) Procedures for reconfiguration and restoration of the shoring system.

b) Maximum time allowed.

c) Stability of shoring system and excavation due to the temporary reconfiguration.

d) Safety of personnel.

e) Prevention of movement of existing foundations, substructures, and on-grade features and improvements.

f) Contingency Plan.

2. A distinct, complete submittal, including calculations, for each excavation configuration. Do not refer to details or calculations submitted for other configurations. Include applicable location by stationing. Each submittal shall incorporate the traffic requirements, overhead obstructions, substructures, surcharges, installation methods, and other factors specific to each location.

3. The Contractor is advised that all shoring and substructure support submittals submitted in accordance with Subarticles 1.05A1 and 1.05A2 of this Section, for excavations in City of Los Angeles rights of way, will add 14 days to the

~~Engineer's~~ Metro and DWP's review period for these submittals.

1.06 GEOTECHNICAL DATA REPORTS

A. Refer to the Geotechnical Data Report~~(s), as defined in Division D1~~.

1.07 SHORING AND BRACING DESIGN

A. Soil Design Pressures:

1. Design all shoring systems utilizing the pressures indicated in the Geotechnical Data Report~~(s)~~. Consider site soil conditions encountered, excavation depths, procedures, type of shoring to be used, water level conditions, and perimeter site conditions, as they relate to structures, utilities, and street surcharges.

2. All shoring for a shaft or pit shall use pressures based on the maximum excavated depth of the shaft or pit.

3. For shafts and pits, the resultant forces of static pressures acting at the centroids of ring beams or wales shall sum to zero.

4. For trenches, each vertical shoring component shall be designed using pressures not less than the pressures acting on the adjacent vertical shoring components.

B. Design Stresses:

1. No increase in allowable stress for temporary load condition will be allowed.

2. Steel Shoring and Bracing Components: Calculate design stresses in accordance with the Specification for the Design, Fabrication, and Erection of Structural Steel for Buildings of the AISC Manual of Steel Construction.

3. Wood Shoring and Lagging:

a. Calculate design stresses in accordance with the National Design Specification for Wood Construction.

b. Use a load duration factor of one for non-impact soil load.

C. Reduction of Soil Load Due to Arching Action:

1. Arching action shall be considered only for lagging members in soldier pile systems.

2. Arching action shall not be considered for:

a. Lagging placed between the soldier pile and the soil.

b. Clayey soil, soil under water, and loose soil, and disturbed soil.

c. Surcharge loads.

d. Hydrostatic pressure.

3. Apply full soil load on lagging members when arching action is not allowed.

D. Surcharge Loads:

1. Design shoring system(s) for surcharge loads induced by vehicular traffic, construction equipments and activities, stockpiling of soil and material, existing structures and buildings, and existing substructures.

2. Design shoring system(s) for a minimum construction equipment surcharge lateral pressure of 200 pounds per square foot (psf) for the first 10 feet of vertical depth and 100 psf thereafter.

PART 2 – PRODUCTS (NOT USED)

PART 3 - EXECUTION

3.01 PERFORMANCE REQUIREMENTS - GENERAL

A. The excavated side walls shall be vertical. Support the entire surface area of the side walls.

B. Support excavations to prevent movement of not more than:

1. 0.5 inches for the adjacent ground.

2. 0.25 inches for existing foundations, substructures, and on-grade features and improvements.

C. Prevent surface water from entering excavations by surface dikes or other water control means approved by ~~the Engineer~~Metro.

D. Recommendations contained in the Geotechnical Data Report~~(s)~~ shall be used as minimum guidelines for the installation of excavation support and protection.

3.02 SHORING

A. Do not use the pipeline or appurtenances as a shoring element.

B. Soldier Pile Shoring System:

1. Place soldier piles in holes drilled to the required depth as shown on the reviewed shoring plan. Support hole sidewall when sloughing is anticipated or observed.

2. Install plates or lagging immediately upon excavation to minimize sloughing or movement of the soils behind the shoring. Install lagging below utilities immediately as the excavation wall is exposed.

3. Weld wales to soldier piles. If wales do not have full flange-to-flange contact with soldier piles, fill the gap with not less than 2 steel spacers, each with a thickness of not less than 1/2-inch. The maximum gap allowed is 4 inches. The length of each spacer shall be not less than the width of the wale. The spacers shall be installed vertically, symmetrical about the web of the soldier pile, and welded.

4. For non-wale shoring systems, where struts are placed directly between soldier piles, install the strut level and at a right angle to the trench centerline, with a maximum allowable total,

combined vertical and horizontal, deviation of 3 inches.

3.03 MONITORING

A. Monitor the following on a daily basis:

1. All excavation support and protection systems, including the lateral and vertical locations of the tops of shoring.

2. Lateral movement, along the entire lengths of selected piles or at predetermined locations approved by the ~~Engineer~~DWP.

B. When shoring system lateral deflection exceeds the limit specified in Subarticle 3.01B of this Section:

1. Stop all work within the excavation.

2. Submit remediation plans to correct the shoring deficiency. Perform no work within the excavation until remediation measures have been implemented.

3.04 REMOVAL AND REPAIRS

A. Removal of shoring shall not cause ground settlement, damage to nearby utilities or structures, or additional loading on the pipe.

B. Remove all shoring components, unless shown otherwise on the drawings.

C. Fill all voids with bedding and backfill material as specified on the drawings.

END OF SECTION

SECTION F02315 - TRENCHING, BACKFILLING, AND COMPACTING FOR WATER PIPELINES

PART 1 - GENERAL

1.01 RELATED DOCUMENTS (NOT USED)

1.02 SUMMARY

A. Excavating, bedding, and backfilling for the installation of large (> 24-inch) water pipe, vaults, appurtenances, connections, jacking pits, receiving pits, tunnel shafts, and associated work.

1.03 RELATED SECTIONS (NOT USED)

1.04 REFERENCES

A. ASTM C 150, Standard Specification for Portland Cement.

B. ASTM D 1556, Test Method for Density and Unit Weight of Soil in Place by the Sand-Cone Method.

C. ASTM D 1557, Test Method for Laboratory Compaction Characteristics of Soil Using Modified Effort.

D. ASTM D 2419, Standard Test Method for Sand Equivalent Value of Soils and Fine Aggregate.

E. ASTM D 6938, Test Methods for Density of Soil and Soil-Aggregate in Place by Nuclear Methods (Shallow Depth).

F. Standard Specifications for Public Works Construction (SSPWC).

1.05 SUBMITTALS

A. Submit the following~~ in accordance with Section F01330~~:

1. A sieve analysis from the supplier and, if requested by the ~~Engineer~~DWP or Metro, a certified test report from an ~~Engineer~~DWP-approved laboratory, both of which shall verify that the crushed miscellaneous base material, crushed aggregate base material, and the sand conform to the requirements of this Section.

2. Mix Designs:

a. Show proportions and gradations of all materials proposed for each cement slurry bedding, cement slurry backfill, and concrete mix.

b. Each design shall be stamped and signed by a licensed civil or structural engineer registered in the State of California.

c. Each design shall include a certified test report from a testing laboratory approved by the City of Los Angeles Building and Safety Department verifying that materials conform to the requirements of this Section. The report shall include results from a compressive strength test.

d. All mix design submittals will add 14 days to ~~the Engineer~~DWP and Metro's review period.

1.06 DEFINITIONS

A. Backfill: Material placed above the bedding to the finished ground surface or paving base material.

B. Bedding: Material supporting and surrounding the pipe extending to one foot above the top of the pipe.

C. Boulder: Rock particle greater than 12 inches in its least dimension.

D. Cobble: Rock particle greater than 3 inches and not more than 12 inches in its least dimension.

E. Fill: Material placed in trench other than bedding and backfill.

F. Relative Compaction: Ratio of in-place field dry unit weight to maximum laboratory dry unit weight of the soil expressed as a percentage. ~~The Engineer~~DWP will determine laboratory maximum dry unit weight in accordance with ASTM D 1557. ~~The Engineer~~ DWP will determine in-place field dry unit weight by sand cone test in accordance with ASTM D 1556 or by nuclear test in accordance with ASTM D 6938, at the discretion of ~~the Engineer~~DWP. Should ~~the Engineer~~DWP or Metro elect to use nuclear testing, not less than one sand-cone test will be taken for every 5 nuclear tests.

G. Shoring: The system used to create structural support for the sides of an excavation.

H. Subgrade: The surface on which the bedding is placed.

1.07 QUALITY CONTROL VERIFICATION TESTING

A. Do not place pipe bedding until the trench subgrade has been approved by ~~the Engineer~~DWP.

B. ~~The Engineer~~DWP will test the relative compaction of densified sand bedding as needed to determine the effectiveness of the Contractor's jetting and vibratory compaction procedures.

C. ~~The Engineer~~DWP will conduct a relative compaction test every 40 to 80 running feet for every 2 feet in depth of fill and backfill. However, ~~the Engineer~~DWP may modify the frequency of testing based on the amount of retests conducted. If a test result indicates a failure to achieve the specified compaction, excavate or densify, or both, the material to the specified compaction, beginning from the failed test location to the nearest passing test locations in each direction.

D. Notify ~~the Engineer~~Metro and DWP not less than 24 hours prior to the test date. ~~The Engineer~~DWP will provide the Contractor with test results within 24 hours after testing. Ten percent of all tests are allowed to be retests. Any retest in excess of 10 percent above the required number of tests shall be paid for by the Contractor at the rate of $400.00 per test and will be deducted from moneys due the Contractor~~ under Section F01290~~.

PART 2 - PRODUCTS

2.01 BEDDING

A. Cement Slurry Bedding: Sand with ASTM C 150 Type II or Type V portland cement and water. The sand shall meet the requirements of sand for densified sand bedding as specified in Subarticle 2.01B of this Section. Bedding shall meet the requirements of Section 201-6 of the City of Los Angeles Department of Public Works Additions and Amendments to the SSPWC (Brown Book) for Controlled Low Strength Material (CLSM).

B. Densified Sand Bedding: Washed and meeting the following requirements:

1. Sand in Subsection 200-1.5.1 of the SSPWC.

2. Sand for portland cement concrete in Subsection 200.1.5.3 of the SSPWC.

3. Sand gradation for portland cement concrete in Subsection 200-1.5.5 of the SSPWC.

4. The percentage passing the Nos. 100 and 200 sieves shall be determined by washing. The percentage passing the remaining sieves shall be determined by dry sieving.

2.02 BACKFILL

A. Crushed Miscellaneous Base (CMB) Backfill: Comply with the requirements for CMB as described in the SSPWC, Subsection 200-2.4, Fine Gradation. Do not use CMB for pipe or vault backfill in public right-of-way.

B. Crushed Aggregate Base (CAB) Backfill: Comply with the requirements for CAB as described in the SSPWC, Subsection 200-2.2. Do not use CAB for pipe or vault backfill in public right-of-way.

C. Densified Backfill: Free-draining material meeting the following requirements:

1. Sand equivalent value, tested in accordance with ASTM D 2419, of not less than 30.

2. Coefficient of permeability greater than 1.4 inches/hour.

3. Maximum size of rocks and unbroken masses of earthen material no larger than 2-1/2 inches.

4. Material passing the No. 40 sieve shall be less than 70 percent. Material passing the No. 200 sieve shall be less than 10 percent and shall be determined by washing.

5. Clean and free of debris.

D. Cement Slurry Backfill: Sand with ASTM C 150 Type II or Type V portland cement and water. The sand shall meet the requirements of sand for densified sand

bedding as specified in Subarticle 2.01B of this Section. Backfill shall meet the requirements of Section 201-6 of the City of Los Angeles Department of Public Works Additions and Amendments to the SSPWC (Brown Book) for Controlled Low Strength Material (CLSM).

PART 3 - EXECUTION

3.01 UNDERGROUND UTILITIES AND SUBSTRUCTURES

A. Active underground utilities are indicated on the drawings.

B. Pothole utilities and substructures to verify locations and depths.

C. Immediately notify ~~the Engineer~~Metro upon encountering active utility lines not indicated on the drawings so ~~the Engineer~~Metro may issue written instructions before the work proceeds.

D. Substructures and utilities encountered during excavations shall be reconstructed or supported as shown on the drawings.

E. Service connections are not shown on the drawings. Assume every property parcel to have a service connection for each type of utility.

F. Unless otherwise shown on the drawings, remove interfering portions of abandoned utilities and plug the open ends with 2,000 psi concrete not less than 12 inches thick.

G. Interfering Sewers: Remodel in accordance with Subsection 306-6 of the SSPWC, and Department of Public Works (DPW), City of Los Angeles, Additions and Amendments to the Standard Specifications for Public Works Construction (Brown Book). The minimum clearance to sewers and sewer house connections shall be as required by the DPW's Standard Drawing, "Sewer and New Water Main Separation" unless otherwise shown on the drawings. These basic separations may be modified with the approval of the responsible health agency and ~~the Engineer~~Metro and DWP by using alternate methods of construction, including concrete bedding or special sewer construction.

3.03 EXCAVATION

A. General:

1. Remove boulders, rocks, cobbles, and other unsuitable material that extend into the bedding zone.

2. Blasting will not be permitted.

3. All excavated material of whatever nature shall be unclassified.

4. Dispose of excavated material designated by ~~the Engineer~~DWP to be unsuitable for use as fill or backfill.

B. Use one of the Fills for Overexcavation specified in Article 2.03 of this Section, as designated by ~~the Engineer~~DWP, to replace trench overexcavation below the specified subgrade. Densify and level off the excavation replacement to the designated subgrade.

C. Softscape Protection: Protect trees and any other landscaping elements not designated to be removed during construction as shown on the drawings in accordance with the requirements stated in the SSPWC, Subsection 300-1.2.

3.04 BEDDING, BACKFILL, AND FILL FOR OVEREXCAVATION

A. Unless otherwise shown on the drawings, densify all densified sand bedding and densified backfill to a minimum of 90 percent relative compaction.

B. Densify cement slurry backfill, cement slurry bedding, and concrete using vibratory methods.

C. Densify densified sand bedding using water jetting or vibratory methods, or both. Bedding may be densified by water jetting when:

1. Surrounding native soil has a Sand Equivalent of not less than 30.

2. Lift being jetted is not more than 4 feet high.

D. Densify CAB and CMB to not less than 95 percent relative compaction using mechanical compaction equipment.

E. Densify soil cement to not less than 95 percent relative compaction using mechanical compaction equipment.

F. Crushed Rock shall be densified to a firm and unyielding surface using mechanical compaction equipment and shall be approved by ~~the Engineer~~DWP.

G. Do not leave more than 500 feet of trench or the amount of trench excavated in one day, whichever is greater, unbackfilled, without the approval of the ~~Engineer~~DWP.

END OF SECTION

SECTION F02515 – PIPELINE TESTING AND DISINFECTION

PART 1 - GENERAL

1.01 RELATED DOCUMENTS (NOT USED)

1.02 SUMMARY

A. Hydrostatic pressure test and disinfect all pipelines and appurtenant piping, including all associated activities.

1.03 RELATED SECTIONS (NOT USED)

1.04 REFERENCES

A. Commercial Standards:

1. ANSI/AWWA B300 - Hypochlorites.

2. ANSI/AWWA C651 - Disinfecting Water Mains.

1.05 SUBMITTALS

A. Submit the~~ following in accordance with Section F01330~~:

1. A plan and schedule for hydrostatic pressure testing all pipelines and appurtenant piping not less than 35 days before testing. Include the following:

a. General information of the pipelines and test requirements.

b. Calculations for hydrostatic test pressure where the pressure gage(s) will be placed. Base the calculations on the following formula:

(Maximum static hydraulic grade – Elevation at the pressure gage location) x 1.25/2.31.

c. A description of the sections to be tested, section components, materials and equipment to be used, pipeline cleaning and testing preparation, details and calculations for

temporary pipe and bulkhead restraints, valve testing (if required), pipe filling (with a sketch showing the water source to the pipeline), soaking, flushing and de-airing, pressure testing, leak inspection and repair, water treatment and disposal (with a sketch showing the pipeline discharge location, the treatment, mixing tank, and draining to the storm drain), and monitoring.

d. The plan shall also demonstrate that the Contractor's personnel performing the testing are experienced and prepared to resolve problems that may arise.

e. Detailed drawings for Contractor-proposed temporary outlet(s) as specified in Subarticle 3.02I of this Section. Indicate location, size, and installation method(s) of outlet(s). Also include the method for removing additional piping, valves, or equipment installed by the Contractor and for plugging the outlet(s), including applicable calculations.

2. A plan and schedule for disinfecting and flushing all pipelines and appurtenance piping not less than 35 days before disinfecting. Include the following:

a. General information of the pipelines and disinfection requirements.

b. A description of how the pipelines and appurtenances will be filled and chlorinated (with a sketch showing the water source to the pipeline and the chlorine injection), materials and equipment to be used, sampling locations, retention period, flushing and discharge, treating and monitoring (with a sketch showing the pipeline drain location, the treatment, mixing tank, and draining to the storm drain), filling and holding, and pipeline dewatering (if required).

c. The plan shall also demonstrate that the personnel performing the pipeline disinfection

operations are experienced and prepared to resolve problems that may arise.

3. Proof of required certifications for disinfection.

4. An Emergency Response Plan for disinfection including the following:

a. The name, address, and telephone number of person(s) responsible for coordinating emergency response activities.

b. Procedures for notifying the Engineer and emergency response agencies, including police and fire departments, for a chemical spill or other emergency condition that could be considered life threatening or hazardous to the surrounding environment.

c. General procedures to contain and neutralize chemical spills that occur as a result of disinfection operations.

1.06 QUALITY ASSURANCE

A. Provide qualified personnel for disinfection operations. They shall be responsible for chlorine injection and residual testing. The personnel shall have experience and training in the use of chlorination and safety equipment and shall meet the following qualifications:

1. Certification: Possess a Grade II or higher Water Distribution Operator license issued by the Department of Public Health of the State of California.

2. Other Contractor personnel not meeting the necessary qualifications may assist in water pipeline disinfection operations, but at no time shall such personnel be responsible for injecting chlorine into the pipeline or performing residual testing.

3. Disinfection and Flushing Coordination Meeting: Upon ~~Engineer~~ Metro and DWP approval of the disinfection and flushing plan, and prior to any related activities, a disinfection and flushing

coordination meeting shall be held with the Contractor's qualified personnel and Department personnel. The meeting will discuss the Contractor's disinfection and flushing plan for pipeline disinfection, pipeline flushing, dechlorination of discharge water, and emergency response procedures for chlorine spills. Provide ~~the Engineer~~Metro and DWP with a 2-working-day notification for the meeting.

B. Adhere to all regulations issued by the U.S. Department of Transportation, Title 49 in the U.S.C.F.R.; the U.S. Environmental Protection Agency, Title 40 in the U.S.C.F.R.; the U.S. Department of Labor, Title 29 in the U.S.C.F.R.; the Chlorine Institute; the American Waterworks Association (AWWA), Standard No. C651-99; and AWWA Distribution System Bacteriological Sampling and Control Guidelines, with regard to the handling, application, sampling, and reporting of all chemicals used during the chlorination process.

C. Make available a proper manifest and Materials Safety Data Sheet for each hazardous chemical used at the jobsite. Display hazardous materials identification placards on vehicles and equipment transporting or applying hazardous materials.

PART 2 - PRODUCTS

2.01 MATERIALS

A. All test equipment, chemicals for chlorination, treatment discharge equipment and chemicals, temporary valves and fittings, bulkheads, or other equipment and materials shall be subject to ~~the Engineer~~DWP and Metro's review.

B. Chlorine may be in the form of sodium hypochlorite solution or calcium hypochlorite granules or tablets. Comply with the requirements of ANSI/AWWA B300.

PART 3 – EXECUTION

3.01 GENERAL

A. ~~Unless otherwise indicated in these specifications, w~~Water for testing and disinfection will be furnished by the Department. Convey the water from the ~~Engineer~~DWP-designated source(s) to the point(s) of use.

B. Hydrostatic test and disinfect all pipelines and appurtenant piping. Complete hydrostatic testing operations for all sections of the pipeline with the exception of those section between the final welds and the butterfly valves before starting disinfection and flushing operations.

C. Perform all testing and disinfection operations in the presence of ~~the Engineer~~Metro and DWP.

D. Schedule disinfection operations as late as possible during the ~~contract~~ time period scheduled for construction of the 36 inch pipe to assure the maximum degree of sterility of the facilities at final completion.

3.02 HYDROSTATIC TESTING

A. Prior to testing, complete all activities associated with the pipeline installation, including lining repairs, interior coatings, and appurtenance installation including permanent valve supports, bedding, and trench backfill. Flush or blow out as necessary. No section of the pipeline shall be tested until all field-placed concrete or mortar has attained an age of 14 days. If approved by ~~the Engineer~~Metro and DWP, some areas may be left open and not backfilled until testing is complete.

B. Test between the bulkheads of 36 inch pipe~~ sections identified on the drawings~~. Temporarily restrain all test bulkheads to resist the thrust of the test pressure without damage to, or movement of, adjacent pipe. Temporarily restrain or anchor all unharnessed sleeve-type couplings, expansion joints, or other sliding joints near a bulkhead prior to the test, to avoid movement and damage to piping and equipment.

Remove all temporary restraints when testing is complete.

C. Perform all testing with ~~Engineer~~DWP-supplied gauge(s) with the exception of pre-test(s). Provide 5 working days notice to ~~the Engineer~~DWP and Metro before needing such gauge(s). Install gauge(s) at location(s) designated by ~~the Engineer~~DWP.

D. ~~Before filling the pipe section, open all valves and keep them open until the test has been completed.~~ Do not pump up or pressurize against closed valves.

E. Blind flange all valves and piping open to atmosphere so that the test sections can be completely sealed.

F. If not present, provide a reduced-pressure-principle backflow device between the water supply source and the pipe section being filled for testing.

G. The fill rate shall not cause air surges or exceed the rate at which the air can be released through the air valves at a reasonable velocity or cause excessive air to be trapped in the pipe section.

H. Purge all air entrapped within the pipe section. Flush air and debris out of blow-offs, air vacuum release valves, and other appurtenances.

I. Blow-offs, air vacuum release valves, and other appurtenances may be used to flush air and debris. However, the air vacuums were designed for normal operation purposes. Provide additional temporary outlets as required for testing. Once test is complete, remove additional piping, valves, and equipment at the outlet and permanently plug.

J. ~~Once the pipe section has been flushed and purged, allow the section to stand under supply line pressure for not less than 72 hours to allow the concrete mortar lining to absorb water, as applicable.~~Not Used

K. Pump the segment up to the approved test pressure.

L. Continually check for and bleed off entrapped air as necessary. Provide sufficient temporary air release taps in the pipelines and appurtenances for this work. Once completed, permanently plug all temporary taps.

M. Examine bulkheads, valves, and connections for leaks, and repair as needed. In special cases, the closing of valves to determine the location of leak(s) may be allowed if approved by ~~the Engineer~~DWP.

N. Pre-test the pipe section before requesting testing by ~~the Engineer~~DWP and Metro to demonstrate that the section is ready for the hydrostatic test.

O. Following pre-testing, request ~~the Engineer to start~~ DWP and Metr to witness the test.

P. Test Duration and Passing Test Criteria:

1. For welded steel pipelines, the test duration shall not be less than 24 hours, during which time there shall be no leakage (for example, no pressure drop due to leaks).

2. For ductile iron pipelines, maintain pressure at ±5 psi for not less than 2 hours, during which time an examination of the pipeline shall be made and any leaks repaired. Then maintain full test pressure for not less than 2 hours, during which time leakage shall not exceed that determined by the following formula:

$L = [(S)\ (D)\ (P)^{1/2}]/133{,}200$ Where:

L = Allowable leakage (gallons per hour)
S = Length of pipe tested (feet)
D = Nominal diameter of the pipe (inches)
P = Test pressure (psi)

Q. Continue checking and addressing leaks and entrapped air until the pipe section passes the test. If the hydrostatic test fails, the Contractor shall have 2 working days to perform corrective measures and repeat and successfully complete the test. If the test fails twice, the Contractor shall pay ~~the Department~~Metro for all costs, including water and expenses of ~~Department~~ DWP and Metro staff, incurred after the second test failure. These costs will be deducted from the moneys due~~ under Section F01290~~.

R. After the hydrostatic test passes and prior to any discharge, notify ~~the Engineer~~DWP and Metro not less than 2 working days prior to sampling and before

testing the hydrostatic test water for discharge. ~~The Engineer~~ DWP will sample and test the hydrostatic test water for compliance with the NPDES discharge permit. Testing is expected to take up to 21 days. Hold the remaining test water until the lab results verify compliance with permit limits. ~~The Engineer~~DWP will furnish the Contractor with the test results as soon as they become available. If the test water violates permit limits, treat as required to meet the permit limits. At a minimum, anticipate that the water will require treatment for pH and chlorine.

S. If treatment is required, supply a chemical injection system and a large treatment tank, approximately 20,000 gallons, to provide adequate chemical mixing and contact time to treat and reduce constituents to levels that meet the NPDES permit limits. The test water to be discharged is required to meet all permit limits at the point where the water leaves the treatment tank.

T. Notify ~~the Engineer~~DWP and Metro not less than 2 working days before discharging hydrostatic test water to the storm drain. ~~The Engineer~~DWP's Environmental Lab will be onsite to inspect the adequacy of the treatment process and to sample treated test water at the point of discharge to verify compliance with the permit limits. Metro will also be on site. The qualified personnel shall continuously monitor and document the discharge from the treatment tank (every 15 minutes) in order to verify the treatment process is meeting permit requirements.

U. Discharge test water to a storm drain that has been protected using sand bags and filter media or another approved method to trap sediment and other material before it can enter the storm drain.

V. Dewater all low areas with trapped water. Pump maintenance holes, standpipes, and vaults to a dry condition.

W. ~~Once all pipe sections have been tested and dewatered, remove all internal bulkheads and repair pipe lining.~~ Clean pipe of any debris.

3.03 DISINFECTING AND FLUSHING

A. General:

1. Disinfect ~~all potable water~~the ~~-~~pipeline~~s~~ in accordance with ANSI/AWWA C651.

2. Schedule disinfection operations at the end of the ~~contract time~~construction period scheduled for construction of the 36 inch pipe to assure ~~all pipelines and appurtenances~~the pipeline is~~ are~~ sterile at final completion.

3. Bacteriological testing will be performed by the ~~Engineer's~~ DWP's Water Quality Laboratory. Disinfect the pipeline so bacteriological testing results meet the requirements of State Department of Public Health or other appropriate regulatory agencies.

4. Notify ~~the Engineer~~DWP and Metro not less than 2 working days before requesting residual testing and bacteriological sampling.

B. Sampling Taps: Provide along the pipeline as defined in AWWA C651. Taps may be made at maintenance holes and air valves to facilitate the spacing requirement.

C. Chlorination: Before filling the pipeline, open all valves, remove intermediate testing bulkheads, and patch the lining. Uniformly introduce a chlorine-water solution by means of a solution-feed chlorinating device. Introduce the solution at one end of the pipeline through a tap in such a manner that as the pipeline is filled with water, the concentration in the water entering the pipe is approximately 50 mg/L. If at any time the residual exceeds 75 mg/L, lower the chemical feed dosage to 50 mg/L. Prevent backflow of chlorine solution into the water supply line by the use of a reduced-pressure-principle backflow prevention device.

D. ~~Chlorinating Valves: Operate all valves and other appurtenances while the pipeline is filled with the heavily chlorinated water~~Not Used.

E. Retention Period: Retain chlorinated water in the pipeline long enough to destroy all non-spore-forming

bacteria. This period shall be not less than 24 hours. Maintain a free chlorine residual at pipeline extremities and at other representative points of not less than 25 mg/L. If the residual is at any time less than 25 mg/L, flush the pipeline and rechlorinate.

F. Flushing: After the applicable retention period, flush the heavily chlorinated water from the pipeline using fresh water until chlorine measurements show that the concentration in the water leaving the pipeline is no higher than 1.5 parts per million or as otherwise approved by ~~the Engineer~~DWP.

G. De-chlorinate and Discharge: All chlorinated water discharged to a storm drain shall have a chlorine residual of less than 0.1 part per million and a pH level between 6.5 and 8.5. Provide a chemical injection system and a large storage tank, approximately 20,000 gallons, for the de-chlorination treatment so that adequate chemical mixing and contact time can be achieved and initial sampling verification can occur. If the initial tank sampling exceeds the chlorine residual or pH levels specified herein, adjust the reducing agent. During discharge, continuously monitor and document the treated water every 15 minutes for chlorine compliance. Provide sand bags and filter media so that sediment and trash can be separated out before the water enters the storm drain.

H. Additional Requirements:

1. Do not leave disinfection water in the pipeline longer than 14 days.

2. At no time following successful completion of the retention period shall the pipe be less than full of water for more than 48 hours.

3.04 CONNECTIONS TO EXISTING SYSTEM

A. Where connections are to be made ~~to an~~the ~~-~~existing potable water system by welding to the pipe stubs attached to the 36 inch butterfly valves, the interior surfaces of all pipe and fittings used in making the connections shall be swabbed or sprayed with a one percent hypochlorite solution after ~~they are~~

~~installed~~the final welds are made. Commence thorough flushing as soon as the connection is completed; continue until discolored water is eliminated.

B. Any personnel entering the pipe after disinfection shall wear protective clothing to prevent contamination of the pipe. Any equipment introduced into the pipe after disinfection shall be treated to prevent contamination of the pipe. All personnel entering the pipe after disinfection shall wear all protective equipment required for entry into a confined space with potentially toxic vapors.

END OF SECTION

SECTION F02560 - FABRICATION OF WELDED STEEL PIPE

PART 1 - GENERAL

1.01 RELATED DOCUMENTS (NOT USED)

1.02 SUMMARY

A. Fabrication of welded steel pipe.

B. Welding.

C. Flanges, gaskets, bolts, and nuts.

D. Inspection and Testing.

1.03 RELATED SECTIONS

A. Section F01330 – Submittals.

B. Section F01430 – Inspection.

1.04 REFERENCES

A. ANSI B16.1, Cast Iron Pipe Flanges and Flanged Fittings.

B. ANSI B16.5, Pipe Flanges and Flanged Fittings.

C. API Specification 5L, Specification for Line Pipe.

D. ASME Boiler and Pressure Vessel Code:

1. Section V, Nondestructive Examination.

2. Section VIII, Pressure Vessels, Division 1, Rules for Construction of Pressure Vessels.

3. Section IX, Qualifications Standard for Welding and Brazing Procedures, Welders, Brazers, and Welding and Brazing Operators.

E. ASTM A 36, Specification for Carbon Structural Steel.

F. ASTM A 53, Specification for Pipe, Steel, Black and Hot-Dipped, Zinc-Coated Welded and Seamless.

G. ASTM A 105, Specification for Forgings, Carbon Steel, for Piping Components.

H. ASTM A 181, Specification for Forgings, Carbon Steel for General Purpose Piping.

I. ASTM A 193, Specification for Alloy-Steel and Stainless Steel Bolting Materials for High-Temperature Service.

J. ASTM A 194, Specification for Carbon and Alloy Steel Nuts for Bolts for High Pressure and High-Temperature Service.

K. ASTM A 234, Specifications for Piping Fittings of Wrought Carbon Steel and Alloy Steel for Moderate and Elevated Temperatures.

L. ASTM A 283, Specification for Low and Intermediate Tensile Strength, Carbon Steel Plates.

M. ASTM A 1011, Specification for Steel, Sheet and Strip, Hot-Rolled, Carbon, Structural, High-Strength Low-Alloy, and High-Strength Low-Alloy With Improved Formability.

N. ASTM A 1018, Specification for Steel, Sheet and Strip, Heavy-Thickness Coils, Hot-Rolled, Carbon, Structural, High-Strength Low-Alloy, Columbium or Vanadium, and High-Strength Low-Alloy with Improved Formability.

O. ASTM D 395, Test Methods for Rubber Property - Compression Set.

P. Publications by American Water Works Association (AWWA).

Q. AWS A 3.0, Standard Welding Terms and Definitions.

R. AWS A 5.1, Specification for Carbon Steel Electrodes for Shielded Metal Arc Welding.

S. AWS A5.20, Specification for Carbon Steel Electrodes for Flux Cored Arc Welding.

T. AWS D1.1, Structural Welding Code - Steel.

U. AWS D10.9, Specification for Qualification of Welding Procedures and Welders for Piping and Tubing.

V. ASTM A325, Standard Specification for Structural Bolts, Steel, Heat Treated, 120/105 ksi Minimum Tensile Strength.

~~X~~W. ASTM A516, Standard Specification for Pressure Vessel Plates, Carbon Steel, for Moderate- and Lower-Temperature Service.

1.05 SUBMITTALS

A. Submit the following~~ in accordance with Section F01330~~:

1. Purchase Order: Within 7 days of Notice to Proceed, submit a copy of the Purchase Order for the manufacturing of steel pipe.

2. Fabrication Schedule: Within 7 days of Notice to Proceed, submit a schedule showing start dates, durations, and end dates for the following activities and milestones: purchase order issued, steel ordered, submittal preparation, submittal review and approval, fabrication of straight pipe, fabrication of special sections, cement mortar lining, dielectric coating, cement mortar coating, hydrostatic testing, and pipe delivery.

3. Delivery Schedule: Within 30 days of Notice to Proceed, submit a schedule showing delivery by pipe stations and piece mark numbers.

4. Design Calculations: Design bulkheads, wyes, and tee special sections, and design computations. Calculations supporting alternatives, proportions, and details shall be signed and stamped by a licensed civil, mechanical, or structural engineer registered in the State of California.

a. Bulkhead Design: Use ASME Boiler and Pressure Vessel Code Section VIII, Pressure Vessels, Division 1. Design and fabricate with ASTM A 516 steel.

b. Wye and Tee Special Section Design: Develop details of wyes, tees, crotch plates, and opening reinforcement in accordance with the applicable provisions of AWWA M11 and AWWA C208.

5. Shop Drawings in separate submittal packages not less than 21 days apart unless otherwise required by ~~Engineer~~Metro or DWP, in the following order:

a. Shop Drawings Package 1: Cylinder Fabrication.

1) Steel cylinder details including approximate footage, approximate number of pieces, cylinder length, thickness, inside diameter (ID), shop hydrostatic test pressure, roundness tolerance, joint tolerance (maximum and minimum), type and thickness of undercoating, thickness of cement mortar lining, thickness of cement mortar coating, weld bell details, weld seam offset, maximum design deflection of standard joint length (in degrees and inches).

2) ~~Shipping stull and brace block details with calculations for pipe 60-inch diameter and greater~~Not Used.

b. Shop Drawings Package 2: Detail Drawings and Lay Diagram. Separate Package 2 into individual segments in accordance with Work Areas shown on the drawings.

1) Special Section details including location of outlets and details for joints, couplings, bulkheads, flanges, butt straps, outlets, tees, wyes, and other special sections.

2) Lay diagram plan and profile showing direction, stations, elevations, piece numbers, joint type, outlets, bulkheads, valves, vaults, and appurtenant piping. Stations shall increase from left to right on shop drawings. Lay diagram shall show the lap of bell and spigot not less than 2 inches.

6. Material Test Reports and Certifications:

a. Certified copies of mill test reports for all steel furnished, including physical and chemical properties.

b. Certified copies of mill test reports for all steel pipe and fittings 24 inches and smaller furnished, including physical and chemical properties.

c. Certified copies of mill test reports for all steel flanges, blind flanges, outlets,

couplings, bolts, nuts, and other steel appurtenances.

d. Certified test results for a 10-foot prototype section.

7. Welding Procedures:

a. Welding Procedure Specifications (WPSs): Minor adjustments in the weld procedure allowed by AWS D1.1.

b. Welding Procedure Qualification Records (PQRs).

c. Welder Performance Qualifications (WPQs).

8. Quality Control:

a. Guidelines for quality control and standard repair procedures.

b. Procedures for shop hydrostatic testing.

9. Actual welding parameters after acceptance of the prototype weld tests as specified in Subarticle 3.04E4 of this Section.

1.06 DEFINITIONS

A. Welding terms and definitions used in this Section shall be in accordance with ANSI/AWS A3.0. In addition, the following definitions shall apply:

1. Spiral Seam Pipe: Pipe in which the weld seam forms a helix on the barrel of the pipe. Girth seams are allowed for angles, bends, reducers, and enlargers only.

2. Straight Seam Pipe: Pipe in which the weld seam is parallel to the axis of the pipe.

3. Production Weld: Any weld produced by automatic welding or hand welding during fabrication.

4. Appurtenant Piping: Any piping, other than the main trunk line, used in pressure applications such as blow-off piping, air/vacuum piping or valve bypass piping.

5. Special Section: A steel pipe section which has been fabricated with an outlet, wye branch, dished head, mitered girth seams, flanged ends, or with more than one size diameter such as a reducer or enlarger.

6. Angle: A special section with one mitered girth seam.

7. Bend: A special section with 2 or more mitered girth seams.

8. Stull: Post used to maintain the pipe's shape during shipping and storage and to elongate the vertical diameter of the pipe prior to bedding consolidation operations. Each end of the stull shall be attached to the center of a brace block.

9. Brace Blocks: Beams attached perpendicular to a stull.

1.07 NOTIFICATION OF ~~ENGINEER~~DWP AND METRO

A. Notify ~~the Engineer~~DWP and Metro ~~in accordance with Section F01430~~ prior to the start of pipe fabrication.

B. ~~The Engineer~~DWP and Metro shall be present for all phases of steel pipe manufacturing and fabrication.

C. Notify ~~the Engineer~~DWP and Metro to witness the following tests:

1. Tensile.

2. Bend.

3. Radiographic.

4. ~~Die~~ Dye Penetrant.

5. Grind Test.

6. Etch Tests.

7. Hydrostatic.

8. Magnetic Particle.

D. Notify ~~the Engineer~~Metro and DWP 5 working days before shipping each pipe or special.

E. For pipe which has been previously fabricated prior to this contract and is proposed to be supplied, retest all required witness tests with Metro and DWP witness in accordance with this section. Any repairs or other procedures requiring Metro or DWP witness or presence shall be redone in accordance with this section.

F. As an alternative to redoing tests, procedures and repairs, submit reports verifying that any test, procedure, or repair requiring DWP or Metro witness have been witnessed by an independent organization not associated with the supplier. Metro and DWP will review this documentation and determine its acceptability. If it is not acceptable the previously fabricated pipe shall be rejected.

1.08 QUALITY ASSURANCE

A. There are no prequalified welding procedures except for fillet welds.

B. Furnish supporting PQRs with each WPS.

C. Perform WPSs and PQRs in accordance with the ASME Boiler and Pressure Vessel Code, Section IX.

D. All welders and welding operators shall be qualified in accordance with the ASME Boiler and Pressure Vessel Code, Section IX.

E. Each welder shall be annually tested in ~~the Engineer~~DWP's presence to demonstrate the ability to produce welds in compliance with these specifications. ~~The Engineer~~DWP may require additional test plates as the work progresses, and ~~the Engineer~~DWP may remove from the project any welder whose work is unsatisfactory, regardless of the quality of their test welds.

1.09 DELIVERY, STORAGE, AND HANDLING

A. Stull and brace block the pipe for shipping.

B. Do not use chains for lifting pipe.

PART 2 - PRODUCTS

2.01 MATERIALS

A. General:

1. Steel or fabricated pipe with scars or damage from hammering, pits greater than one-inch in diameter and deeper than 1/16-inch, laminations greater than 1/32-inch in depth, or any other physical defects that cannot be corrected by welding so as to restore the designed strength will be rejected by ~~the Engineer~~DWP.

2. All furnished materials used in the fabrication of steel pipe shall be identified. Document and maintain identification throughout the fabrication process. Do not use remnant pipe without prior written approval from ~~the Department~~Metro and DWP.

3. The minimum plate thickness shall be not more than 0.010 inch less than the specified thickness. Unless otherwise specified, minimum thickness of the pipe shall be 0.375 inch.

4. Steel shall be continuous cast, fully-killed, fine grain.

B. Plate Steel: Steel plate used in the fabrication of welded steel pipe with a diameter of 24 inches or larger shall meet the requirements of ASTM A 283, Grade D, and the Supplementary Requirement X-4; or ASTM A 36 and the Supplementary Requirement X-4.

C. Coil Steel:

1. Coil steel used in the fabrication of welded steel pipe with a diameter greater than 24 inches shall meet the requirements of ASTM A 1011, SS Grade 33 or 36, Type 1; or ASTM A 1018, SS Grade 33 or 36, Type 1. Appendix X1.1 applies to all steel in this Subarticle.

2. Take one tensile test specimen from the outer lap of each coil, and one tensile test specimen from the middle one-third of each coil.

a. The maximum tensile strength of each specimen shall be 75,000 psi. When the tensile strength

exceeds 70,000 psi, the elongation shall exceed 30 percent in a 2-inch gauge.

b. Tensile tests shall include, yield strength, ultimate strength and percent elongation.

3. Take one bend test specimen from the outer lap of each coil, and one bend test specimen from the middle one-third of each coil. Test using the minimum inside radii specified in Appendix X1 of ASTM A 1011.

4. If any test specimen fails to meet the requirements of the material specifications, test a second specimen plate from the same heat number. If any test specimen from the second specimen plate fails, then all steel from the same heat will be rejected.

D. Appurtenant Steel Piping with a Diameter of 24 Inches or Less:

1. The pipe shall be fabricated in accordance with ASTM A 53, Type E, or API 5L, Grade A or Grade B meeting the chemical requirements of Grade A.

2. If the quantity of pipe utilized is greater than 1,000 feet, the production weld tests requirements of these specifications shall apply.

3. Prefabricated Fittings:

a. Prefabricated fittings shall be steel fittings meeting the requirements of ASTM A 234, Grade WPB, seamless.

b. Do not use prefabricated fittings in high-pressure applications or as part of a steel pipe main or distribution pipeline.

E. Steel Flanges and Accessories:

1. Flanges:

a. 4-inch through 12-inch in diameter shall be of the forged steel welded neck type and shall meet the requirements of ASTM A 181, Class 60 or ASTM A 105 Class 70.

b. 14-inch in diameter and larger shall be steel slip-on, blind, or ring flanges and shall meet

the requirements of ASTM A 181, Class 60; ASTM A 283, Grade C; or ASTM A 36.

c. Steel ring flanges mating to butterfly valves shall conform to the following:

1) Diameters 48 inches or less: AWWA C207 Class F.

2) Diameters 54 inches or more: AWWA C207 Class E.

2. Bolts:

a. Provide bolts for flanges that meet the requirements of ANSI B16.5, Section 6.9.1.

b. Provide nut and bolt head shapes in the American National Standard heavy hexagonal dimensions.

c. Machine bolt material for flanges under 16 inches shall meet the requirements of ASTM A 307, Grade B.

d. Machine bolt and stud bolt material for flanges 16-inch in diameter or larger shall meet the requirements of ASTM A 193, Grade B7, and ASTM A 194, Grade 2H.

e. Protect bolts from corrosion using a manufacturer-recommended coating.

3. Gaskets:

a. Use one piece 1/8-inch thick full-face compressed non-asbestos fiber gaskets.

b. Provide gasket material that extends not less than 1/8-inch beyond the outside circumference of the flange, and is flush with inside circumference of the flange.

c. Non-Insulating gaskets shall be Garlock, Blue-Gard 3000, Anchor Green Klinger C4401, or Red Devil 940.

d. Insulating gaskets, sleeves, and washers shall be as specified on the drawings.

4. Welding Fittings:

a. Shall be butt-welded wrought carbon steel in accordance with ASTM A 234, Grade WPB.

b. Where welding-type outlets are shown on the drawings, match the mounting diameter to that of the surface upon which they are mounted. Where the mounting surface is curved to a diameter of 36 inches or more, the outlet bottom may be flat.

c. Forge threaded outlets and plugs from steel in accordance with ASTM A 105 or ASTM A 181, Class 70.

d. Form welding-type outlets from steel conforming to the requirements specified for threaded outlets.

e. Applicable manufacturers of welding fittings shall be as follows:

1) Threaded Outlets: Bonney “Thredolets”, Porter “W-S Teelets”, or Vogt “Weld Couplets.”

2) Welded Outlets: Bonney “Thredolets”, Porter “W-S Teelets”, or Vogt “Weld Couplets.”

5. Accessories:

a. Use a thread lubricating sealant on flanges and flange bolts specifically formulated for use as a bolt lubricant. Furnish certification from ANSI/NSF or EPA that the product is acceptable for use in potable water structures.

b. Use a Teflon-based pipe joint compound specifically formulated for use in joining threaded pipe. Furnish certification from ANSI/NSF or EPA that the product is acceptable for use in potable water structures.

c. Use a lubricant for mechanical couplings specifically formulated for such use. Furnish certification from ANSI/NSF or EPA that the product is acceptable for use in potable water structures.

PART 3 - EXECUTION

3.01 FABRICATION

A. General:

1. Do not diminish plate thickness when grinding weld faces flush with the base metal.

2. Provide both ends of plain end pipe with a right angle cut.

3. Do not hammer pipe or weld during or after manufacturing.

4. Assign every pipe a mark number after belling. This mark number shall be permanently steel stamped, maintained during remaining manufacturing operations and shall not be changed.

B. Edge Preparation for Welding:

1. Cut all plates to size, with all edges straight, uniform, smooth, and free from scale and slag accumulation. Clean all plate edges and surfaces adjacent to the edges to be welded. Remove all oil, grease, rust, and mill scale by wire brushing, sand blasting, or other methods suitable for the intended purpose.

2. On special sections having abutting plates of different thickness, prepare the thicker plate so that the apex of the weld groove corresponds with that of the thinner plate. The thicker plate shall have a taper of not more than 2-1/2:1.

3. The longitudinal edges of all flat plates shall be lap-broken prior to the plate forming operation. Perform lap-breaking operation by either rolling or die pressing. Provide a uniformly curved plate edge matching the curve of the pipe shell.

4. Form plates to the proper curvature by rolling or pressing before the seams are welded. Provide a uniform circular curve.

5. All coil steel for spiral-seam pipe shall be helically formed before welding of the seams.

Match and hold sheets in position during the welding operation.

6. The offset of abutting edges, after welding, shall be not more than 1/32-inch.

C. Straight seam pipe less than 36 inches in diameter shall have not more than 2 longitudinal seams. Sections 36 inches in diameter or greater shall have not more than 4 longitudinal seams. Stagger adjacent longitudinal seams 60 degrees.

D. Straight seam pipe with double-welded butt joint seams and a diameter of 24 inches or greater shall have not more than 3 girth seams.

E. Join coil ends with a full penetration, double-welded, butt joint. All coil splices and 36 inches of its circumferential junction welds shall be 100 percent x-rayed. The following restrictions shall also apply:

1. The coil end shall be not less than 12 inches from the end of any pipe section.

2. The coil end shall be not less than 12 inches from any girth welds.

3. No more than one coil end weld shall be used in any pipe section.

F. Special Sections:

1. Fabricate from straight pipe sections that have been tested in accordance with the requirements for straight pipe sections.

2. Do not locate attachment welds for outlets, reinforcing collars, or crotch plates within 12 inches of longitudinal, spiral, or girth seam welds.

G. Angles and Bends:

1. Deflections between adjacent courses of bends and angles shall not exceed 22 1/2 degrees. Butt-weld girth seams in the shop.

2. The distance between girth welds shall be not less than 12 inches.

3. The distance from either end of a bend or angle section to the nearest girth seam shall be not less than 2 feet.

4. The radius of curvature of the pipe axis of shop-fabricated bends shall be not less than 2 1/2 times the pipe ID.

H. Preparation of Pipe Ends:

1. Slip Joint Ends:

a. Press or roll bell ends to the required shape. Press or expand the bell in a uniform and concentric manner. Inspect weld in the formed bell area with 100 percent magnetic particle method. Also inspect 20 percent of this weld by radiographic method.

b. The length of the straight portion of the bell shall be not less than 1 1/2 inches for pipe 24 inches in diameter or less, and not less than 3 inches for pipe greater than 24 inches in diameter.

c. Grind weld faces on the inside of the bell end and on the outside of the spigot end flush with the base metal surface within 6 inches of the pipe end.

d. Remove sharp edges and burrs from inside of the bell and outside of the spigot.

e. The bell end of a steel pipe section may be beveled up to 5 degrees.

2. Butt-Strapped Ends: Grind outside weld faces flush with the base metal surface within 6 inches of the ends.

3. Mechanically-Coupled Ends:

a. Grind outside weld faces flush with the base metal surface within 10 inches of the pipe end.

b. Prepare plain, grooved, or banded ends to fit the type of mechanical couplings to be used.

4. Flanged Ends: Grind the outside weld faces flush with the base metal surface within 6 inches of the pipe end.

I. Outlets:

1. Fabricate reinforcing plates and pipe for outlets over 24 inches in diameter from the same material as the pipe, or as shown on the drawings.

2. The outside edge of any collar shall be not less than 2 feet from the end of the pipe and not less than 12 inches from the nearest girth weld seam.

3. Stress-relieve all double crotch plate outlets after welding. Also stress-relieve the crotch plate to pipe attachment weld for the same temperature and time as the crotch plate weld.

3.02 WELDING

A. General:

1. Minor adjustments allowed by AWS D1.1, may be made to weld procedures to accommodate production variations, provided ~~the Engineer~~DWP is notified in writing.

2. All butt joints shall be full penetration double-welded.

B. Welds:

1. All welds shall produce complete fusion with the base metal.

2. Weld all longitudinal, spiral, and girth seams using a submerged arc welding process.

3. Shielded Metal Arc Welding (SMAW) may be performed when it is physically impossible to use a Submerged Arc Welding (SAW) process. SMAW may be performed on straight pipe sections to make tack welds, to repair structural defects, and to repair automatic machine welds.

4. Clean each layer of weld metal before additional filler metal is applied.

5. Provide outside face reinforcement between 1/16-inch and 1/8-inch thick. The weld face may be ground or chipped to achieve the 1/8-inch face reinforcement thickness.

6. The weld face shall be central to the joint seam. Provide a finished joint free from depressions, burrs, undercut edges, irregularities, and valleys.

7. The weld face on the inside of the pipe shall be ground or chipped until the weld reinforcement is not more than 1/16-inch thick. Do not grind or chip below the surface of the plate.

8. Perform fillet welding in accordance with AWS D1.1. For base metal **Error! Bookmark not defined.**1/4-inch thick or more, fillet welds shall be 1/16-inch less than the thickness of the base metal. Fillet welds shall fully penetrate into the joint root. Deposit filler metal in successive layers so that there will be at least as many passes as there are complete multiples of 1/8-inch in base metal thickness.

9. The filler metal used with automatic welding processes shall be comparable to and compatible with the base material in metallurgical and mechanical properties and design and service requirements.

10. Use electrodes for manual shielded metal arc welding that conform to AWS A5.1, Classification E6010 or E7018 Low Hydrogen Series.

C. Weld Repair:

1. Do not repair more than 5 percent of the total length of the original weld in any pipe section. Pipe sections requiring repair of more than 5 percent of the welded length will be rejected.

2. Enlarge welds found deficient in dimensions, but not in quality, by additional welding. If the weld is inaccessible or conditions exist which would make weld enlargement inadvisable, restore the original conditions by removing the weld metal, the members, or both, before enlarging the deficient weld.

3. A weld not in compliance with these specifications shall be removed throughout its length by chipping or melting. Remove weld metal throughout its depth to expose clean base metal. For a local deficiency, remove a sufficient amount of weld metal to ensure that sound weld metal is remaining.

4. Do not extend cutting or chipping into the base metal beyond the heat-affected zone during removal of the weld. Do not burn or damage the base metal.

5. Inspect the background area by the "~~liquid~~ dye penetrant method" approved by ~~the Engineer~~DWP. ~~The Engineer~~DWP and Metro will witness these inspections. Remove all linear or porosity indications prior to applying weld metal.

6. Remove and replace overheated weld metal and base metal with new weld metal. If the base metal cannot be repaired with weld metal, replace it.

7. Reject any pipe section with a weld not in compliance after 3 same-weld repairs.

D. Provide generators and transformers with devices for controlling the welding current and arc-voltage and with meters indicating the amount of each at all times.

3.03 FLANGE FABRICATION

A. General: Machine outside flange faces flat-faced in accordance with AWWA C207, Subarticle 4.2.2. Inside flange faces shall be flat-faced parallel to the outside faces.

B. Flange Finish for Flanges Smaller Than 48 Inches and for Insulating Flanges:

1. Face and serrate slip-on or ring flanges after welding to the pipe.

2. Finish flanges to a maximum roughness of 250 micro inches before serration.

3. Serrate flanges with concentric, V-shaped serrations, 1/64-inch deep, 1/32-inch apart.

4. Drill flanges after finishing.

C. Flange Finish for Flanges 48 Inches and Larger Except Insulating Flanges:

1. Face flanges after welding to the pipe.

2. Drill flanges before finishing.

3. Flanges shall be flat-faced without serration and finished to a maximum roughness of 125 micro inches.

D. Provide blind flanges equal in thickness to a ring flange of the same pressure class. Machine and face to match the mating flange.

E. Inspect welded joints and subject them to radiographic examination, ultrasonic examination, or dye penetration examination.

3.04 SOURCE QUALITY CONTROL – GENERAL

A. General: Prepare and test all weld test specimens, including required reconditioning of a pipe section from which the specimen plate is cut, at no additional expense~~ to the Department~~.

B. Weld Test Specimens:

1. Cut test specimen plates transverse to the spiral seam, longitudinal seam, or girth seam of the pipe sections at a location directed by ~~the Engineer~~Metro. Plates may be obtained from the pipe section or a 2-foot drop section.

2. Test specimen plates for double-welded butt joint seams shall comply with AWS B4.0. The plates shall be large enough to provide all test specimens. If the specimen is taken from the pipe area, repair by hand welding a plate of the same material, thickness, and curvature as the pipe. The repair weld shall consist of a double-welded butt joint.

C. Weld Tests:

1. Reduced Section Tensile Test: The yield strength shall not be less than the minimum yield strength of the base metal. The tensile strength shall not be less than the minimum tensile strength of the base metal.

2. Guided Bend Test: Perform bend tests on a root weld specimen and on a face weld specimen. Bend the specimens cold at 180 degrees around a pin or mandrel having a diameter 3 times the thickness of the plate, and show an elongation of not less than 20 percent across the weld. The entire bent area of the specimen shall be free of fractures.

3. Radiographic Test:

   a. Take a 4-1/2-inch by 17-inch spot radiograph at a location as directed by ~~the Engineer~~DWP.

   b. Procedures and interpretations shall be in accordance with ASME Boiler and Pressure Vessel Code, Section 8, Division 1, Part UW51 except that ASTM E 94, Type 1 industrial radiographic film shall be used.

   c. Additional radiographic tests will be required if weld irregularities, including seam misalignment or erratic profile, are observed.

4. Grind Test: When requested by ~~the Engineer~~DWP, grind a small portion of the weld down to the root and perform the "liquid penetrant method" test. ~~The Engineer~~DWP will inspect the root for welding defects.

5. Etch Test: Conform to the requirements of AWS D1.1 for Macro Etch Tests.

6. Porosity: Maximum acceptable porosity shall be as set forth in Appendix IV of the ASME Boiler and Pressure Vessel Code.

D. In-Process Visual Inspection: ~~The Engineer~~DWP and Metro's acceptance is required at the following hold points:

   1. After completion of fit-up.

   2. After completion of the root pass and any required dye-check.

   3. After completion of the weld.

E. Prototype Weld Tests: Include one reduced-section tensile test, guided bend tests, and one spot radiograph.

1. Fabricate one 10-foot long prototype of the steel pipe using the submitted WPS.

2. Take prototype weld tests for double-welded butt joint seams from 2 locations.

3. Should any of the tests fail to meet the requirements of these specifications, make corrective adjustments to the welding procedure and fabricate another 10-foot long prototype.

4. Submit actual welding parameters after acceptance of the prototype weld tests by ~~the Engineer~~DWP.

F. Production Weld Tests: For both spiral welded and straight seam pipe, include one reduced section tensile test, guided bend tests, and one spot radiograph.

1. Prepare and test one set of production weld test specimens from each shift's production run or 600 linear feet of weld, whichever is smaller.

2. If any of the shift’s production weld tests fail to meet the requirements of these specifications, perform one set of additional tests on each preceding and successive sections of pipe. Conduct tests on additional preceding and successive pipe sections until the tests meet the requirements of these specifications. The remaining pipe of the shift's production run shall be deemed acceptable.

3. ~~The Engineer~~DWP will determine the status of the original pipe section not meeting the requirements of these specifications.

4. ~~The Engineer~~DWP may require additional weld test specimen plates if there is any other indication that an unsatisfactory production weld has been made.

5. Welded steel pipe 12 inches in diameter or less will not require this method of testing.

G. Special Sections and Straight Seam Pipe:

1. Welds will be inspected by the in-process visual inspection method.

2. Girth seams shall be 100 percent radiographed. When 100 percent radiography is physically impossible, hydrostatic testing may be substituted.

3. Perform soap and air test where applicable.

4. Perform 100 percent ultrasonic testing of crotch plate welds and attachment welds between the main pipe, crotch plates, and outlets. Retest after stress relieving, if applicable.

H. Appurtenant Piping 24 Inches in Diameter or Less:

1. Welds will be inspected by the in-process visual inspection method.

2. Inspect each butt weld by spot radiographs in accordance with these specifications.

I. Weld Re-Inspection: Any portion of a pipe belled, sized, or otherwise deformed shall have the weld re-inspected in accordance with the API Standard 5LX, Section 7, Paragraphs 7.18 through 7.21.

3.05 SOURCE QUALITY CONTROL - HYDROSTATIC TESTS

A. General:

1. Maintain the test pressure for not less than 2 minutes. ~~The Engineer~~DWP or Metro may require the test pressure to be held for up to 5 minutes.

2. While under pressure, inspect the welded seams for leaks, and plainly mark each leak.

   a. Any section showing more than one leak for every 5 feet of weld seam will be rejected. Repair leaks on sections showing less than one leak for each 5 feet of welded seam and not more than 2-1/2 percent of the total length of the welded seam. Hydrostatically retest the repaired pipe. Any pipe section that leaks during a retest will be rejected.

   b. Do not close leaks with caulk.

3. After testing~~ by the Engineer~~, stamp pipe sections with a legible mark of identification.

B. Straight Pipe Sections: Test each straight pipe section to the pressure as determined by the following formula:

$P = 2\sigma t/D$, where:

P = Pressure in pounds per square inch XXX psi(psi).

σ = 75 percent of the specified minimum yield strength.

t = Wall thickness of the pipe in inches.

D = Outside diameter (OD) in inches of straight pipe section or the larger OD of tapered sections.

C. Special Sections: Only when radiography is physically impossible.

1. Hydrostatic test pressure shall be 1-1/2 times the design pressure or 100 psi, whichever is greater.

2. For outlets that have been welded to straight pipe sections that have received hydrostatic testing, the outlet welds may be tested by the soap and compressed air method.

D. Insulated Joint Assembly: Using bulkheads, test to 1.5 times the design pressure or 100 psi, whichever is greater.

3.06 SOURCE QUALITY CONTROL - RADIOGRAPHIC TESTS

A. Test special sections in accordance with the ASME Boiler and Pressure Vessel Code, Section VIII, Unfired Pressure Vessels, Paragraph UW-51.

3.07 SOURCE QUALITY CONTROL - TOLERANCES

A. Diameter:

1. Specify pipe sizes by either ID or OD.

2. The diameter specified shall be the nominal diameter.

3. The ID of pipe whose OD is specified shall be the nominal OD minus twice the nominal plate thickness.

4. The OD of pipe whose ID is specified shall be the nominal ID plus twice the nominal plate thickness.

5. The ID of a bell shall be between 1/32-inch and 1/16-inch greater than the OD of the adjoining spigot end.

6. Where a backing ring is utilized, the ID of the ring shall be between 1/32-inch and 1/16-inch greater than the OD of the adjoining spigot end.

7. The pipe shall have a uniform circular cross-section throughout its length.

B. Circumference:

1. The circumference shall be computed from the nominal diameter.

2. The measured circumference of the pipe within 8 inches from each end shall not be more than 1/8-inch greater than the computed circumference nor 1/16-inch less than the computed circumference.

3. The measured circumference of the pipe, except within 8 inches from each end, shall not be more than 9/32-inch greater than the computed circumference nor 3/32-inch less than the computed circumference.

C. Roundness: The pipe shall not be out-of-round on any diameter by more than ± one percent of the specified diameter. Within 8 inches from the ends, the tolerance shall be:

1. Pipe 96 inches OD and less: 0.5 percent of the specified diameter but not more than 1/4-inch.

2. Pipe greater than 96 inches OD: Not more than 1/2-inch.

3. Pipe ends that exceed tolerance may be reconditioned by rolling or by pressure. Do not use hammering. Resubmit to ~~the Engineer~~Metro and DWP for approval and hydrostatically test.

D. Length:

1. Pipe sections, except closures and specials, shall be not more than 40 feet long.

2. The length of each straight pipe section shall not vary by more than 2 inches from that indicated on the approved shop drawings.

3. The length of each special section shall not vary by more than 1/8-inch.

E. Straightness:

1. Pipe sections shall be straight with the walls parallel to the axis of the pipe. Pipe sections with misalignment from a straight line parallel to the pipe axis exceeding 1/8-inch for 10 feet of pipe length will be rejected.

2. Misalignment of the bell to the straight pipe shall be limited to one-half the plate thickness.

3.08 INSULATED JOINT ASSEMBLY

A. Clean pits, gouges, rust debris, oil, and grease from flange surfaces.

B. Tighten bolts to uniformly compress the gasket following the bolt pattern specified by the gasket manufacturer.

C. If assembly is disassembled due to hydrotest failure, replace with new gasket and insulating kit, and re-test.

D. Upon successful hydrotest, remove test heads and apply epoxy lining and coating. Then perform final continuity test in the presence of ~~the Engineer~~Metro and DWP.

3.09 CLEANING AND DAMAGED PIPE

A. Thoroughly clean the pipe of loose mill scale, paint, oil, grease, burned flux, molten metal, and other foreign substances.

B. All pipe sections and special sections that have dents, kinks, abrupt changes of curvature other than specified, or damage at any time will be rejected. All pipe sections or special sections that have been dropped from a truck or crane will be rejected. The

fabricator shall replace the rejected sections with undamaged sections.

C. Pipe rejected because of substantial damage may be reconditioned upon approval of ~~the Engineer~~Metro and DWP by rolling or by pressure. Do not use hammering. Pipe rejected because of gouges, scars, or other minor damage shall be reconditioned to return the pipe to its design strength and specified characteristics in a manner approved by ~~the Engineer~~Metro and DWP. Where reconditioning has required removal and replacement of a weld or reshaping by rolling, the reconditioned area shall be inspected by spot radiographs or retested hydrostatically by the fabricator as determined by ~~the Engineer~~Metro and DWP.

END OF SECTION

SECTION F02561 - INSTALLATION OF WELDED STEEL PIPE

PART 1 - GENERAL

1.01 RELATED DOCUMENTS (NOT USED)

1.02 SUMMARY

A. Install welded steel pipe, appurtenances, and accessories.

1.03 RELATED SECTIONS (NOT USED)

~~**A.** Section F01330 - Submittals.~~

1.04 REFERENCES

A. ANSI B16.1, Cast Iron Pipe Flanges and Flanged Fittings.

B. ANSI B16.5, Pipe Flanges and Flanged Fittings.

C. API Specification 5L, Specification for Line Pipe.

D. ASME Boiler and Pressure Vessel Code:

1. Section V, Nondestructive Examination.

2. Section VIII, Pressure Vessels, Division 1, Rules for Construction of Pressure Vessels.

3. Section IX, Qualifications Standard for Welding and Brazing Procedures, Welders, Brazers, and Welding and Brazing Operators.

E. Publications by the American Society for Testing and Materials (ASTM).

F. Publications by American Water Works Association (AWWA).

G. AWS A 3.0, Standard Welding Terms and Definitions.

H. AWS A 5.1, Specification for Carbon Steel Electrodes for Shielded Metal Arc Welding.

I. AWS A 5.20, Specification for Carbon Steel Electrodes for Flux Cored Arc Welding.

J. AWS D 1.1, Structural Welding Code - Steel.

K. AWS D 10.9, Specification for Qualification of Welding Procedures and Welders for Piping and Tubing.

L. ASTM A 36, Specifications for Carbon Structural Steel.

1.05 SUBMITTALS

A. Submit the following~~ in accordance with Section F01330~~:

1. Drawings:

a. Mechanical coupling design calculations and detailed shop drawings. Include information on joint sealers and backer rods.

b. Manufacturer's weld procedures of the end-rings associated with the restraining type mechanical couplings. Include the manufacturer's procedures for locating and installing the end rings. Template shop drawings and procedures shall assure that the end-rings are properly located.

2. Plans and Procedures:

a. Welding Procedure Specifications (WPSs): Submit not less than 10 days prior to beginning installation. Include weld sketches as necessary, and the number and position of passes. Minor adjustments in the weld procedure are allowed by AWS D1.1.

b. Welding Procedure Qualification Records (PQRs): Submit not less than 10 days prior to beginning installation.

c. Welder Performance Qualifications (WPQs): Submit not less than 10 days prior to beginning installation.

d. Field stulling detail drawings, procedures for ensuring final in-place roundness following bedding and backfill operations, and supporting calculations.

e. Plans and procedures to prevent pipe flotation, deflection, or damage prior to completion of trench backfill.

1.06 QUALITY CONTROL

A. There are no prequalified welding procedures under this Section.

B. Furnish each WPS with all supporting PQRs attached.

C. Perform WPSs and PQRs in accordance with the ASME Boiler and Pressure Vessel Code, Section IX.

D. All welders and welding operators shall be qualified in accordance with the ASME Boiler and Pressure Vessel Code, Section IX.

F. The Engineer will have the right at any time to call for and witness the making of test specimens by any welder.

1.07 DEFINITIONS

A. Welding terms and definitions used in this Section shall be in accordance with ANSI/AWS A 3.0. In addition, the following definitions shall apply:

1. Spiral-Seam Pipe: Pipe in which the weld seam forms a helix on the barrel of the pipe.

2. Straight-Seam Pipe: Pipe in which the weld seam is parallel to the axis of the pipe.

3. Production Weld: Any weld produced by automatic welding or hand welding during fabrication.

4. Special Section: A section with an outlet, wye branch, dished head, mitered girth seam, reducer, or enlarger.

5. Angle: A special section with one mitered girth seam.

6. Bend: A special section with 2 or more mitered girth seams.

7. Fabricated Fitting: A special section that is fabricated from straight sections of steel pipe.

8. Internal Diameter: Measured from pipe internal steel surface.

9. Finished Internal Diameter: Measured from pipe internal lined surface.

1.08 DELIVERY, STORAGE, AND HANDLING

A. Store pipe and associated materials in compliance with the requirements of the SSPWC, Subsection 7-10.2.

B. Do not block access to driveways, walkways, and any other means of ingress or egress to residences and business establishments.

PART 2 – PRODUCTS NOT USED

PART 3 - EXECUTION

3.01 FIELD INSTALLATION - GENERAL

A. Pipe laying tolerance shall be the greater of 0.1 feet or ± one percent of the diameter of the pipe, in the horizontal and vertical directions. Set the top of pipe, indicated in the Pipe Shop Drawings as the Field Top, within ± one degree of the vertical.

B. After each section of pipe is bedded for not less than 50 percent of its length, attach to the previous section of pipe by means of a welded slip joint, unless otherwise shown on the drawings.

C. For welded slip joints, an asymmetrical insertion of the spigot end into the bell to accommodate small changes or adjustments in alignment or grade may be performed with the Engineer's approval. The lap shall be not less than 1-1/2 inches. Where a 3-inch lap is required, the lap shall be not less than 3 inches.

D. Bed each section of pipe to provide continuous bearing and prevent uneven settlement and lateral displacement.

E. Weld pipe joints prior to placing heat shrink joint protection sleeve around the pipe per AWWA C216.

F. Welding terms and definitions used in this Section are in accordance with ANSI/AWS A 3.0.

G. Flange Joints: Use insulated flange connections on 12-inch or smaller service outlets and on appurtenance outlets as shown on the drawings.

H. Final In-place Roundness: Upon removal of stulls and blocks following completion of backfill operations, all trunk line at all locations shall have an in-place finished internal diameter within one percent of the average finished internal diameter. The average finished internal diameter will be determined by ~~the Engineer~~DWP at each point of inspection by summing a vertical and a horizontal finished internal diameter measurement and dividing by 2.

1. For pipe in concrete cradle or encasement, provide adequate stulling and brace blocks to ensure final in-place roundness. Notify the ~~Engineer~~ Metro and DWP not less than 48 hours prior to commencement of cradle or encasement operations for each pipe section. Provide access for ~~the Engineer~~Metro and DWP to inspect pipe interior for roundness.

2. For cement slurry or consolidated bedding and backfill, prior to placement of slurry or consolidation of bedding, elongate the vertical diameter of the pipe using stulls and brace blocks. Elongation shall be sufficient to ensure final in-place roundness. Notify the Engineer not less than 48 hours prior to commencement of bedding operations for each pipe section. Provide access for ~~the Engineer~~DWP and Metro to inspect pipe interior for roundness.

3. Where final in-place roundness limits are exceeded, remove cradle, encasement, bedding, or backfill, as needed, then re-elongate the pipe using stulls and brace blocks. Replace cradle, encasement, bedding, or backfill, and re-measure for the specified tolerance.

3.02 WELDING CONDITIONS

A. Furnish a Welding Procedure Specification for each welding process. Perform Welding Procedure Specifications in accordance with the ASME Boiler and Pressure Vessel Code, Section IX.

1. Furnish Procedure Qualification Records to support all Welding Procedure Specifications. Prepare Procedure Qualification Records in accordance with

the ASME Boiler and Pressure Vessel Code, Section IX.

2. Minor adjustments allowed by the American Welding Society, AWS D1.1, may be made to the procedure as necessary to accommodate production variations, provided ~~the Engineer~~DWP is notified of such change.

B. Prior to any field welding, hold an onsite meeting with ~~the Engineer~~DWP and Metro.

C. Electrodes for manual shielded metal arc welding shall conform to AWS A5.1, AWS A5.5, or AWS A5.20, Classification E6010 or E7018 Series. Perform field welds using the shielded metal-arc welding process with a flux-coated electrode of not more than 3/16-inch in diameter.

1. Use classification E6010 electrodes for the root weld.

2. Use classification E6010 or E7018 for subsequent weld passes.

3. Use and store electrodes in accordance with the manufacturer's printed instructions. ~~The Engineer~~DWP may inspect electrodes at any time. Electrodes that are deteriorated or that are not stored in accordance with the manufacturer's printed instructions will be rejected.

4. Do not interchange electrodes of different classifications during the process of making a weld.

D. Welds:

1. All welds shall produce complete fusion with the base metal.

2. Remove all foreign substances including oil, grease, rust, mill scale, and paint from within 3 inches of all edges to be welded. Thoroughly clean each layer of welded metal before applying additional filler metal.

3. The weld face shall be central to the joint seam. The finished joint shall be free from depressions, burrs, undercut edges, irregularities, and valleys.

4. All butt joint welds shall be full penetration. Backgouge root passes for double-welded butt joints.

5. Perform fillet welds in accordance with AWS D1.1. Fillet welds shall fully penetrate into the joint root. Deposit filler metal in successive layers so there will be at least as many passes as there are complete multiples of 1/8-inch in the pipe wall thickness.

6. Weld in continuous circumferential passes. Complete each pass for the full circumference of the seam. When welding is interrupted, clean the weld before work is resumed. Wash beads will not be allowed as a deposition pass, but are permissible as a clean-up pass after the depositional passes are completed and approved by ~~the Engineer~~DWP.

7. The thickness of each bead shall not exceed 1/4-inch for the root pass and 3/16-inch for the remaining additional passes. The width of each pass shall not exceed 3 times the electrode diameter.

8. Perform welding only when the surfaces are free of moisture.

9. Do not weld during high winds or rain unless the areas being welded are shielded.

10. For joints in pipe sections not designated on the drawings to be pressure tested, weld the pipe inside and outside.

E. Weld Quality:

1. Provide complete fusion between the base metal and filler metal and produce a weld free of cracks, slag inclusions, and porosity.

2. Provide surfaces free of unusual grooves, valleys, depressions, burrs, overlapping, undercutting, or other irregularities.

3. Provide smooth transitions from the weld to the plate metal.

3.03 TESTS AND INSPECTIONS

A. All field welds will be given an in-process visual inspection by ~~the LADWP~~DWP. Should the in-process visual inspection of any pass indicate a defect, a~~n optional~~ dye-penetrant or magnetic particle examination of that weld, or both, at the option of DWP shall be made to determine the extent of the defect.

B. For full-penetration butt joints, back gouge the root pass and examine with a dye-penetrant test before proceeding. 100 percent radiographic test the final weld in accordance with the procedures and interpretations of the ASME Boiler and Pressure Vessel Code, Section 8, Division 1, Part UW51, except that ASTM E 94, Type 1 industrial radiographic film shall be used.

C. The in-process visual inspection of the welds requires ~~the Engineer~~DWP and Metro's acceptance at the following steps:

1. After completion of fit-up.

2. After completion of the root pass and any required dye-check.

3. After completion of the weld.

D. Furnish a Field Weld Inspection Report Form from the ~~LADWP~~ DWP for every welded joint.

E. Defects and Repairs:

1. Repair nicks, gouges, notches, grooves, and depressions in the base metal in the area of the seam before the seam weld is made. Remove tack welds, clips, and other attachments and repair defects, except where tack welds occur within the weld area and these tack welds do not exceed, in size, the completed weld. Grind repair areas to clean metal and repair by building up with weld metal and grinding smooth to form a plane surface with the base metal.

2. Correct welds found deficient in dimensions, but not in quality, as directed by ~~the Engineer~~DWP.

3. Remove welds deficient in quality by a grinding or cutting method approved by ~~the Engineer~~DWP. Do not

extend removal of the weld into the base metal beyond the heat-affected zone. Do not burn or damage the base metal. Remove weld metal throughout the depth to expose clean base metal. For a local deficiency, remove a sufficient amount of weld metal to ensure that sound weld metal remains.

4. Arc scars, nicks, notches, grooves, or depressions in the adjacent base metal occurring during welding shall be promptly repaired.

5. Inspect the background area using a "liquid penetrant method" approved by ~~the Engineer~~DWP. Conduct inspections in the presence of the Engineer. Remove all linear or porosity indications in the background area prior to applying any weld metal.

6. Remove overheated weld metal and base metal, and then replace with new weld metal.

7. Do not caulk or peen welds to correct defects.

3.04 WELDED SLIP JOINTS

A. Welds shall be made only on the inside of the pipe for pipe having a diameter greater than 36 inches and on the outside of the pipe for pipe having a diameter 36 inches or less. Joints greater than 36 inches in diameter that are not pressure tested shall be welded inside and outside.

B. The lap shall be not less than 1-1/2 inches.

C. Every sixth joint, or not less than one joint in every 250 feet, shall have a 3-inch stab. The first joint on each side of all concrete encased sections shall have a 3-inch stab. Weld 3-inch stab joints after all the joints on both sides have been welded and backfilled. Weld the joint when the temperature of the steel is at its lowest during the 24-hour day.

D. Stagger longitudinal pipe weld seams of adjacent pipe sections 90 degrees.

E. Provide bell holes at all welded joints, butt straps, and mechanical couplings to allow unrestricted access to the outside of the joint to facilitate installation and coating.

END OF SECTION

SECTION F02565 – LININGS AND COATINGS FOR WELDED STEEL PIPE

PART 1 - GENERAL

1.01 RELATED DOCUMENTS (NOT USED)

1.02 SUMMARY

A. Shop- and field-applied protective linings and coatings on welded steel pipe, pipe appurtenances, and maintenance hole standpipes, including:

1. Cement mortar lining and coating.

2. Undercoating systems.

3. Epoxy coatings.

4. Inspection and testing.

1.03 RELATED SECTIONS (NOT USED)

1.04 REFERENCES

A. ASTM A82, Specification for Steel Wire, Plain, for Concrete Reinforcement.

B. ASTM A185, Specification for Steel Welded Wire, Fabric, Plain, for Concrete Reinforcement.

C. ASTM C33, Standard Specification for Concrete Aggregates.

D. ASTM C109, Test Method for Compressive Strength of Hydraulic Cement Mortars.

E. ASTM C150, Specification for Portland Cement.

F. ASTM C685, Standard Specification for Concrete Made by Volumetric Batching and Continuous Mixing.

G. AWWA C203, Coal-Tar Protective Coatings and Linings for Steel Water Pipelines - Enamel and Tape - Hot Applied.

H. AWWA C205, Cement-Mortar Protective Lining and Coating for Steel Pipe – 4 inches and Larger - Shop Applied.

I. AWWA C210, Liquid-Epoxy Coatings Systems for the Interior and Exterior of Steel Water Pipelines.

J. AWWA C213, Fusion Bonded Epoxy Coating for the Interior and Exterior of Steel Water Pipelines.

L. AWWA C215, Extruded Polyolefin Coatings for the Exterior of Steel Water Pipelines.

M. SSPC, SP-1, Solvent Cleaning.

N. SSPC, SP-5, White Metal Blast Cleaning.

O. SSPC, SP-10, Near-White Metal Blast Cleaning.

P. NACE, RP-02-74, High Voltage Electrical Inspection of Pipeline Coatings Prior to Installation.

Q. NSF/ANSI 61-2005/Addendum 1.0-2005, Drinking Water System Components - Health Effects.

1.05 SUBMITTALS

A. Submit the following~~ in accordance with Section F01330~~:

1. Product Data.

2. Mix design for each shop and field type of cement-mortar lining and coating, and where each type of mix shall be used.

3. Manufacturer's certification that the following materials have been tested in accordance with the material specified and meets the requirements of these specifications.

a. Cement.

b. Sand.

c. Coal tar.

d. Steel wire reinforcement.

e. Epoxy.

f. Extruded coating systems.

4. Material specifications and material safety data sheets for all shop- and field-applied materials.

5. Test procedures to determine in-place adhesion requirements of undercoating system.

6. Visual standards for interior and exterior surface preparations on a 6-inch square sample of steel for each type of surface. Protect each sample from contamination and corrosion and maintain as a reference standard throughout coating operations.

7. Quality Control Guidelines.

8. Detailed application procedures, equipment, safety procedures, and material certifications.

9. The names and qualifications of the workers and supervisors to be employed on the coating operations not less than 14 days prior to the start of coating operations.

10. Documentation verifying that facilities and equipment comply with the requirements of Subarticle 3.01E6 of this Section.

1.06 DEFINITIONS

A. Special Section, Angle, Bend: As defined in Article 1.06 of Section F02560.

B. DFT: Dry Film Thickness.

1.07 NOTIFICATION OF ~~ENGINEER~~DWP AND METRO

A. Notify ~~the Engineer~~DWP and Metro ~~in accordance with Division F01430~~ prior to the start of linings and coatings.

B. ~~The Engineer~~DWP and Metor shall be present to witness all lining and coating processes.

C. Notify ~~the Engineer~~Metro and DWP to witness the following tests:

1. Holiday testing.

2. Undercoating peel testing.

3. Megger testing.

D. Previously coated pipe will not be accepted. Remove all previously applied coatings.

1.08 DELIVERY, STORAGE, AND HANDLING

A. Pad all slings, forks, supports, and skids used in handling or storing coated pipe.

B. Use padded cradles when shipping pipe to provide support along 1/4 of the pipe circumference and to protect the pipe coating. Do not use chains and steel bands.

C. Store all paint, primer, and tape material indoors in a well-ventilated area with an ambient temperature between 50F and 100F. Mark all materials with their expiration date.

1.09 QUALIFICATION OF MANUFACTURERS

A. ~~The Department desires~~DWP and Metro require that the manufacturer demonstrate not less than 5 years successful application of the coating system on large diameter steel water pipelines as specified herein.

PART 2 - PRODUCTS

2.01 MATERIALS

A. Cement-Mortar:

1. Base mix design on the following:

a. A minimum compressive strength of 2,600 psi in 7 days.

b. A minimum compressive strength of 4,500 psi in 28 days.

c. Materials shall comply with AWWA C205 as modified herein.

d. Cement shall be low-alkali Portland cement meeting the requirements of ASTM C150, Type II or Type V.

e. Sand shall meet the mortar requirements of the SSPWC, Subsection 200-1.5.3, and the additional impurity and gradation requirements of AWWA C205, Section 4.2 for mortar.

f. Water shall contain not more than 1,000 ppm of chlorides calculated as Cl, nor more than 1,000 ppm of sulfates calculated as SO_4. Water shall be clean, colorless, and free of any materials that may reduce the strength or durability of the cement mortar.

2. Wire-fabric reinforcement for mortar coating shall meet the requirements of ASTM A 185. Reinforcement shall not be crimped and shall be clean and free of rust.

3. Spiral-wire reinforcement for mortar coating shall meet the requirements of ASTM A 82 and a minimum size of W0.5 (0.080 inch).

B. Coal-Tar Enamel Undercoating System:

1. The primer, coal-tar enamel, and outerwrap shall comply with the requirements of AWWA C203, Section 4.

2. The primer shall be Type B.

3. The coal-tar enamel shall be Type I. If approved by ~~the Engineer~~DWP, Type II enamel may be used.

C. Extruded Polyolefin Undercoating System:

1. Provide a multi-layer polyolefin coating system that complies with AWWA C215, except as modified herein.

2. The coating system shall be side-extruded (Type B) consisting of a butyladhesive layer and a polyethylene sheath.

3. Apply in accordance with the manufacturer's printed instructions, unless otherwise specified herein.

D. Epoxy Coatings and Linings:

1. Exterior of pipe and appurtenances, direct-buried or installed in vaults: Powercrete J Epoxy as manufactured by Berry Plastics Corporation.

2. Interior of pipe and appurtenances: NSF-approved for use with potable water. Unless otherwise shown on the drawings, use Dura-Plate UHS as manufactured by the Sherwin-Williams Company.

3. Exterior of pipe and appurtenances exposed to sunlight: Zinc Clad III HS 100, Recoatable Epoxy Primer Low VOC, and Hi-Solids Polyurethane 100 as manufactured by the Sherwin-Williams Company.

PART 3 - EXECUTION

3.01 SHOP APPLICATION

A. General:

1. Before cleaning and surface preparation, test the inside and outside surfaces of steel pipe sections for residual chloride concentration.

a. Chloride test equipment shall be Chlor*Test, as manufactured by Chlor*Rid International, Inc. Perform tests in the presence of ~~the Engineer~~DWP and Metro at 3 locations on the surface for every 1,000 feet of pipe. ~~The Engineer~~DWP will determine the test locations. If the residual chloride concentration exceeds 5mg/cm^2, sandblast and apply a phosphoric acid wash. The average pipe temperature, measured at 3 different locations, shall be 80F to 130F during the acid wash procedure. The acid wash shall be a 5 percent by weight phosphoric acid solution. Determine the duration in which the acid is in contact with the surface using the average temperature as tabulated herein:

Pipe Temperature (F)	Contact Time (Seconds)
80	52
85	42
90	36
95	33
100	28
105	24
110	21
135	10

b. After the acid wash has been completed, remove the acid with demineralized water having a maximum conductivity of 5 micromhos/cm at a minimum nozzle pressure of 2,500 psi. Follow with a dry abrasive blast on the inside and outside surfaces of the pipe. Retest the pipe for residual chloride concentration in accordance with this Subarticle. Remove all residue from the test area before applying coating and lining.

2. The exterior surface of each section of steel pipe shall receive a single factory-applied undercoating system as specified herein and where shown on the drawings.

3. The exterior surface of special sections shall be coated with coal-tar enamel or epoxy as indicated on the drawings and as follows:

a. Isolate all special sections. After approval by ~~the Engineer~~DWP, coat the previously isolated special sections with a coal-tar enamel system meeting the requirements of AWWA C203, Section 4, except as modified herein. The total thickness, including the glass felt outer wrap, shall be not less than 1/8-inch, with a tolerance of plus 1/32-inch.

b. If epoxy coating is specified on the drawings, apply epoxy to the entire special section in accordance with Subarticle 3.01H of this Section.

4. Holdbacks shall be straight-edged for the total thickness of every coating.

B. Cement-Mortar Lining:

1. Apply centrifugally by spinning the pipe. Apply in accordance with the requirements described in AWWA C205, except as modified herein.

2. Thickness and tolerances shall be as shown on the drawings.

3. In addition to the finish requirements under Section 4.4 of AWWA C205, remove latency to obtain a smooth, hard, finished surface by a method approved by ~~the Engineer~~DWP.

4. Replace related paragraphs of 4.4.7 of AWWA C205 with the following:

"Steam or water cure the lining. Immediately after lining each pipe section, seal the ends with plastic sheeting not less than 4 mils thick and maintain in place during the period of storage in the plant and during delivery to the jobsite.”

"Begin steam curing not sooner than 4 hours after application of the lining. Apply continuously for not less than 16 hours with a relative humidity of not less than 85 percent at temperatures between 90F and 125F. Then water cure for 4 days prior to shipping.”

"Keep the lining of the pipe moist and the pipe ends sealed until the pipe is delivered to the jobsite."

5. Cut out defective or damaged lining and repair with materials equal to the adjacent undamaged section. Cut the edges of the existing lining approximately normal to the pipe shell. Reinforce areas greater than 5 inches by 9 inches with 2-inch by 4-inch, 13-gage, welded wire-fabric, spot-welded to the pipe. Water cure repaired areas for 7 days prior to shipping.

C. Coal-Tar Enamel Undercoating System:

1. General:

a. Clean the pipe in accordance with SSPC, SP-10, prior to coating.

b. Do not allow pipe to flash rust prior to coating.

c. Do not coat mechanical couplings with coal-tar enamel.

2. Application:

a. Apply in accordance with the requirements described in AWWA C203.

b. Do not apply to the interior of the pipe. All references to coal-tar enamel lining in AWWA C203 shall not be used.

c. The coating shall consist of primer, coal-tar enamel 3/32-inch thick with a tolerance of +1/32 inch, and glass felt. Total thickness of the system shall be 1/8 inch with a tolerance of +1/32 inch.

D. Extruded Polyolefin Undercoating System:

1. Grind exterior weld seams flush to a smooth finish without reducing the wall thickness.

2. Apply in a continuous operation as prescribed in AWWA C215, except for the following:

a. Preheat the entire pipe to not less than 80F.

b. The thickness of the adhesive shall be not less than 10 mils. If testing reveals a thickness less than 10 mils, strip the entire coating system from the pipe and reapply.

c. Edge lap the adhesive not less than 0.5 inch and not more than 2 inches.

d. The thickness of the polyethylene sheath shall be not less than 60 mils.

e. Edge lap the polyethylene sheath not less than one inch.

F. Cement Mortar Coating:

1. Reinforcement:

a. Pipe up to and including 60 inches in diameter:

1) Double wire, applied spirally under moderate tension while the mortar coating is being applied.

2) Apply over a 3/8-inch thick layer of cement mortar.

3) Maximum spacing of the wires shall be ¾-inch.

b. Pipe over 60 inches in diameter:

1) Wire-fabric applied over a 3/8-inch layer of cement-mortar.

2) Apply in circumferential strips or by helical winding of a continuous roll of reinforcement onto the pipe.

3) Apply so members on the smaller spacing run circumferentially or helically around the pipe.

4) Circumferential strips shall overlap adjacent strips by not less than 4 inches. The ends shall overlap not less than 4 inches and shall be spliced with 16-gage steel wire at intervals not exceeding 12 inches. Stagger splices around the circumference of the pipe, but adjacent splices shall not be diametrically opposite each other.

5) Helically wound strips shall have a continuous 2-inch overlap. Overlap roll ends 4 inches overlap and splice by tying securely. Add a 12-inch wide strip over the reinforcement at each end of the pipe.

2. Curing: Replace Section 4.5.9 of AWWA C205 with the following: "As soon as the coating has set sufficiently for the pipe to be moved, keep moist not less than 14 days by continuous water spraying or by intermittent water spraying with a covering of burlap or canvas."

G. NOT USED

H. Epoxy Coatings and Linings:

1. General:

a. Clean surfaces to remove all foreign matter and contaminants in accordance with SSPC-SP1, Solvent Cleaning, surface cleanliness standard.

b. Remove all projections and irregularities. Grind smooth all sharp edges and corners.

c. Abrasive blast clean the surfaces in accordance with SSPC, SP-5, White Metal Blast Cleaning with 2 to 3.5 mil profile.

d. Remove all abrasive blast cleaning residue before coating.

e. Commence coating immediately after surface preparation. Apply in accordance with the manufacturer's printed instructions.

f. Test coating and lining in the presence of ~~the Engineer~~DWP and Metro for thickness and holidays after the epoxy has cured. Test with a low-voltage wet sponge holiday detector at a voltage not exceeding 75 volts. Repair all holidays and irregularities and retest.

2. Exterior of pipe and appurtenances, direct-buried or installed in vaults: 2 coats of Powercrete J Epoxy. Each coat shall have a minimum DFT of 10 mils.

3. Exterior of pipe and appurtenances, direct-buried or installed in vaults, and interior of maintenance hole standpipes: 2 coats of Powercrete J Epoxy. Each coat shall have a minimum DFT of 10 mils.

4. Interior of pipe and appurtenances: 3 coats of Dura-Plate UHS. Each coat shall have a minimum DFT of 7 mils.

5. Exterior of pipe and appurtenances exposed to direct or ambient sunlight: Apply in accordance with the following schedule:

Coat	Paint Color	Minimum DFT
Primer: Zinc Clad III HS 100	Gray-green	5.0 mils
Second: Recoatable Epoxy Primer Low VOC	Red Oxide	6.0 mils
Third: Hi-Solids Polyurethane 100	Ivory or Forest Green	3.0 mils
Final: Hi-Solids Polyurethane 100	Ivory or Forest Green	3.0 mils

6. Do not epoxy coat threaded connections and mating flange faces. Lightly coat with a rust inhibitor as specified on the drawings, and thoroughly remove before installing pipe.

3.02 COATING REPAIRS

A. General:

1. Repair all voids, holidays, defects, and damaged areas with an ~~Engineer~~DWP-approved procedure.

2. Remove all loose and disbanded material. Remove all sharp points, burrs, and rough edges from the coating. Clean the surface to the cleanliness required in this Section. Apply the new coating with the same procedures used to apply the original coating.

C. Special Sections: Repair and patch coal tar enamel in accordance with Subarticle 3.01C of this Section. Overlap feathered and cleaned existing coatings not less than 2 inches.

D. Retest repaired areas in the presence of ~~the Engineer~~Metro and DWP.

3.03 SHOP INSPECTION AND TESTING

A. General:

1. Visually and electrically inspect all coatings for holidays before leaving their respective application area.

2. Ensure that a proper bond exists between each undercoating system and the pipe. Perform adhesion tests as requested by and in the presence of ~~the Engineer~~Metro and DWP.

3. Provide a copy of all test reports to ~~the Engineer~~Metro and DWP daily, including results of the following:

   a. Cement mortar lining, and concrete compression tests.

   b. Tensile, bend, and macro etch tests of welds.

   c. Outside diameter check of the sized bell and spigot of each cylinder.

   d. Profile tests of blasted surface of steel pipe.

   e. Peel tests.

   f. Chloride tests.

   g. Incidental damage and repairs.

B. Holiday Test: Perform immediately after application of dielectric undercoating and again immediately before application of cement mortar coating. Test at a voltage recommended by the test manufacturer's printed instructions and as required by AWWA C203, C209, C214, and C215.

C. Megger (ohmmeter) Test: Perform immediately following cement mortar coating application.

D. Coal-Tar Enamel Peel Tests: Perform in the presence of ~~the Engineer~~Metro and DWP in accordance with the requirements described in AWWA C203.

E. Extruded Coating System Adhesion Peel Tests:

1. Procedure:

a. Condition the test specimen to not more than 80F.

b. Using a galvanized steel template, mark a one-inch by 15-inch rectangular strip, the long axis of which shall be perpendicular to the pipe axis.

2. Location: Two locations selected by ~~the Engineer~~DWP. Perform 3 tests at each location.

3. Frequency:

a. At the beginning of each production run, test the first 6 pipes and every fifth pipe thereafter.

b. During a regular production day, test the first pipe, every fifth pipe thereafter, and the last pipe of the day.

4. Acceptance Criteria:

a. The average adhesion strength for each location shall be not less than 30 pounds per inch of width.

b. No single test shall result in adhesion strength below 25 pounds per inch of width.

5. Re-tests:

a. The fabricator may allow an additional 24 hours of cure time before retesting.

b. For a failed re-test, perform additional testing within the body of the pipe as directed by ~~the Engineer~~DWP. If any portion of the pipe fails the re-test, that portion, as determined by ~~the Engineer~~Metro and DWP, shall be stripped to bare metal, recoated, and retested.

3.04 FIELD-APPLIED DIELECTRIC COATING

A. Clean surfaces to remove all foreign matter and contaminants in accordance with SSPC-SP1, Solvent Cleaning, surface cleanliness standard.

B. Prepare bare metal surfaces by power tool cleaning or abrasive blast cleaning to an SSPC SP-5 white metal cleanliness specification with a resultant anchor profile of 2.0 to 3.5 mils. Feather edges into existing coatings. Remove all cleaning residue before coating.

C. Apply coal tar enamel coating in accordance with AWWA C203 on all exposed metal surfaces at direct-buried welded pipe joints or wrap the joints with heat shrink sleeves in accordance with AWWA C216. If adjacent coating at the joint is epoxy, follow the directions in Subarticles 3.04D and 3.04E of this Section. Do not apply coal tar enamel or heat shrink sleeves adjacent to or on any existing epoxy coating.

D. Coat exposed metal surfaces of direct-buried pipe and pipe appurtenances as follows:

1. Apply 2 coats of Powercrete J Epoxy. Each coat shall have a minimum DFT of 10 mils. Overlap feathered and cleaned existing coatings a minimum of 2 inches.

2. After the epoxy coating has cured, test the coating for thickness and holidays. Repair all holidays and irregularities and retest. Test and repair in the presence of ~~the Engineer~~Metro and DWP.

3. After the epoxy-coated areas have been accepted by ~~the Engineer~~Metro and DWP, apply a wax tape coating system to bolted flange connections, mechanical couplings, threaded pipe connections, valves, and over epoxy-coated areas as follows:

a. Wipe surfaces to remove all dust and moisture.

b. Apply a thin film of Trenton Wax-Tape Primer for #1 Wax-Tape or Trenton Temcoat to the surfaces by brush or by hand. Trenton Fill-Putty may be applied by brush or by hand to irregular surfaces where the primer or Temcoat does not form to the metal surface easily.

c. Apply Trenton #1 Wax-Tape with a 50 percent overlap. Overlap not less than 4 inches over existing coatings. While wrapping, apply tension and press the Wax-Tape into place making sure to remove all air pockets. Press and smooth out the lap seams to ensure that the laps are sealed.

d. Over-wrap the wax tape with 3 passes of PolyPly wrapper.

e. No drying or curing time is required.

E. Coat exposed metal surfaces of pipe and pipe appurtenances in vaults and standpipes as follows:

1. Apply 2 coats of Powercrete J Epoxy. Each coat shall have a minimum DFT of 10 mils. Overlap feathered and cleaned existing coatings not less than 2 inches.

2. After the epoxy coating has cured, test the coating for thickness and holidays. Repair all holidays and irregularities and retest. Test and repair in the presence of ~~the Engineer~~Metro and DWP.

3. After the epoxy-coated areas have been accepted by ~~the Engineer~~DWP, apply a wax tape coating system to bolted flange connections, mechanical couplings, threaded pipe connections, valves, and over epoxy-coated areas as follows:

a. Wipe surfaces to remove all dust and moisture.

b. Apply a thin film of Trenton Wax-Tape Primer for #2 Wax-Tape or Trenton Temcoat to the surfaces by brush or by hand. Trenton Fill-Putty may be applied by brush or by hand to irregular surfaces where the primer or Temcoat does not form to the metal surface easily.

c. Apply Trenton #2 Wax-Tape with a 50 percent overlap. Overlap not less than 3 inches over existing coatings. While wrapping, apply tension and press the Wax-Tape into place making sure to remove all air pockets. Press and smooth out the lap seams to ensure that the laps are sealed.

d. No drying or curing time is required.

F. Inspection Hold Points:

1. After cleaning, ~~the Engineer~~DWP will verify surface preparation before application of the coating system.

2. After application, ~~the Engineer~~DWP will visually inspect the coating system and witness the holiday test. Provide equipment and trained personnel for this test.

3.05 FIELD-APPLIED CEMENT MORTAR LINING

A. Line unlined joints by hand patching to yield a lining equal to that required for shop-applied troweled lining and in accordance with Subarticle 3.01B5 of this Section.

B. Cement mortar for patching or lining joints shall be of the same material as the mortar for the shop-applied lining, except that a finer grading of sand and a mortar richer in cements may be used if such mix will improve the results, provided approval of ~~the Engineer~~DWP has been obtained.

C. Clean defective areas of all loose foreign material and moisten with water just prior to applying mortar.

D. Apply mortar with steel finishing trowels.

E. As directed by ~~the Engineer~~Metro and DWP at connections or other time-critical joints, mortar for field patching may consist of a mix of plastic cement, silica sand, and Rapid Set® Cement All™ High Strength Non-Shrink Grout. Cure in accordance with manufacturer's printed recommendations, but not less than 2 hours, prior to disinfection.

3.06 FIELD REPAIR OF DEFECTIVE OR DAMAGED COATINGS AND LININGS

A. Cement Mortar Lining and Coating:

1. Repair defective areas in shop-applied cement mortar coating by hand patching to yield a coating equal to that required for shop-applied troweled coating. Cut out defective or damaged coating and repair with materials equal to the adjacent undamaged section. Cut the edges of the existing coating approximately normal to the pipe shell. Reinforce areas greater than 5 inches by 9 inches with wire fabric in accordance with Subarticle 2.01A2 of this Section, spot-welded to the pipe.

2. Refer to Subarticles 3.05B through 3.05E of this Section for further details for repair of cement mortar.

B. Epoxy:

1. Repair epoxy linings and coatings in accordance with Subarticle 3.01H of this Section. Overlap feathered and cleaned existing coatings not less than 2 inches.

2. Apply wax tape in accordance with Subarticle 3.04D3 of this Section for direct buried sections of pipe and appurtenances.

3. Apply wax tape in accordance with Subarticle 3.04E3 of this Section for pipe and appurtenances in vaults.

C. Coal Tar Enamel: Repair and patch coal tar enamel in accordance with Subarticle 3.01C of this Section. Overlap feathered and cleaned existing coatings not less than 2 inches.

D. Extruded Polyolefin: Repair in accordance with the manufacturer's printed instructions. Provide a copy of the printed instructions to ~~the Engineer~~Metro and DWP before commencing repairs.

E. Tape Coat: Repair in accordance with the manufacturer's printed instructions. Provide a copy of the instructions to ~~the Engineer~~DWP and Metro before commencing repairs.

END OF SECTION

SECTION F13110 - CATHODIC PROTECTION

PART 1 - GENERAL

1.01 RELATED DOCUMENTS (NOT USED)

1.02 SUMMARY

A. Install and test pipeline Galvanic Cathodic Protection (GCP).

1.03 RELATED SECTIONS (NOT USED)

1.04 REFERENCES

A. National Association of Corrosion Engineers (NACE).

B. ~~ASTM A518, Standard Specification for Corrosion-Resistant High-Silicon Iron Castings.~~

~~**C.**~~ ASTM B3, Standard Specification for Soft or Annealed Copper Wire.

D. ASTM B8, Standard Specification for Concentric-Lay-Stranded Copper Conductors, Hard, Medium-Hard, or Soft.

E. ASTM B49, Standard Specification for Copper Rod Drawing Stock for Electrical Purposes.

F. ASTM B843, Standard Specification for Magnesium Alloy Anodes for Cathodic Protection.

G. ASTM D1248, Standard Specification for Polyethylene Plastics Extrusion Materials For Wire and Cable.

H. ASTM G57, Standard Test Method for Field Measurement of Soil Resistivity Using the Wenner Four-Electrode Method.

I. ASTM G97, Standard Test Method for Laboratory Evaluation of Magnesium Sacrificial Anode Test Specimens for Underground Applications.

1.05 SUBMITTALS

A. Submit the following~~ in accordance with Section F01330~~:

1. A copy of the NACE certification(s) of the CP Specialist(s) responsible for the installation of CP components.

2. The Department desires that the installer of CP components have 10 years experience installing CP systems of similar scope as the proposed project. Submit references of 5 CP systems of similar scope installed in the last 10 years.

3. Catalog cuts and technical data sheets of all products and materials to be used.

4. Report of test data and test results, prepared by the CP Specialist, for tests required in Article 3.04 of this Section.

1.06 INITIALISMS, ACRONYMS, AND DEFINITIONS

A. Appurtenance: A pre-manufactured ancillary component of a pipeline, installed in line with pipe/fitting components, connected by gasket-type joints. Examples: Valves, mechanical couplings, and flow meters.

B. AWG: American Wire Gauge.

C. Bond Cables (pair): One cable passing over an appurtenance, ends attached to the upstream and downstream segments of steel pipe connected to the appurtenance, to provide electrical continuity of the pipeline across the appurtenance. A second cable, one end attached to the appurtenance and the other end attached to either of the 2 segments of steel pipe, to provide an electrical bond from the pipeline to the appurtenance.

D. CP Specialist: A person certified by NACE International as a CP Specialist.

E. CP Test Station (CPTS): Typical configuration of wiring, terminations, and their access installed as part of a CP system to enable testing of it, where CP test cables are connected to the steel pipe, routed in conduit to behind curb, and terminated in a CPTS box.

F. Galvanic Anode Station (GAS): Typical configuration of GCP anodes installed as part of a GCP system, where the lead cables are connected directly to the pipe.

G. Galvanic Cathodic Protection (GCP) System: A passive cathodic protection system that utilizes sacrificial magnesium anodes.

H. Galvanic CPTS (GCPTS): A combined configuration of a CPTS with a GAS installed as a part of a GCP system, where the anode lead cables are routed in the same conduit and terminated in the same CPTS box as the CP test cables.

K. Insulating Joint (IJ): A location along a pipeline, across which electrical conductivity is fully broken by installing one of the following:

1. Pre-Assembled Insulating Joint.

2. Insulated Flange Connection installed in the field between appurtenances.

L. NACE: National Association of Corrosion Engineers.

M. NEMA: National Electrical Manufacturer's Association.

1.07 QUALITY ASSURANCE

A. Installation and testing of the CP system and its components shall be performed by personnel who have been trained by and are continuously supervised by a CP Specialist.

B. Records: Prepare and maintain as-constructed records of the CP system components. The records shall show component locations by pipe stationing and referenced to pipe centerline.

1.08 NOTIFICATIONS AND MEETINGS

A. No CP work shall commence prior to a CP preconstruction meeting, attended by the Contractor, the CP Specialist, ~~the Engineer~~Metro and DWP, and ~~the Department~~DWP's Corrosion Engineering staff. Notify ~~the Engineer~~Metro to schedule the meeting after completing all submittal requirements, but not later than 10 working days before CP work is to begin.

B. Once CP work commences, furnish a list to ~~the Engineer~~Metro and DWP each week of CP installation items, by station, planned for the following week. If CP-related work has been suspended longer than 2 weeks, notify ~~the Engineer~~Metro not less than 3 working days prior to resuming work.

PART 2 - PRODUCTS

2.01 GENERAL MATERIALS

A. Cables: All cables except anode lead cables shall be single conductor, stranded copper, conforming to ASTM B8, with High Molecular Weight Polyethylene (HMWPE) insulation, conforming to ASTM D1248, and rated at 600V.

B. Exothermic Weld Materials:

1. Use CADWELD exothermic connections as manufactured by Erico International Corporation for all cable connections. Provide all materials from the same manufacturer.

2. Welder molds shall be graphite and shall conform to the manufacturer's written recommendations for the size of cable to be welded.

3. Adapter sleeves shall be copper and shall conform to the manufacturer's written recommendations for the size of cable to be welded.

4. Material shall be in accordance with the manufacturer's written recommendations for the type of pipe material and the size of cable to be welded.

C. Epoxy Putty: FastSteel 2-part epoxy putty, manufactured by Polymeric Systems.

D. Conduit: ~~In accordance with Section F16130:~~

1. In locations not exposed to sunlight, use PVC Schedule 80.

2. In locations exposed to sunlight, use rigid steel.

E. Terminal Lugs: For cable connections to terminal boards and anode junction panels, use copper lugs sized for the cables to be connected.

F. Terminal Boards: Use 1/4-inch thick Micarta insulating panels with shunts, terminal lugs, and brass fasteners of dimensions and configurations shown on the drawings.

2.02 GCP SYSTEM MATERIALS

A. GCP Anode Packages: Use individually wrapped and sealed anode/soil packages consisting of a magnesium anode, embedded in a special backfill material in a fabric bag, with a lead cable for attachment to the pipe.

1. Magnesium Anode: Horizontally D-shaped casting, weighing not less than 32 pounds, and containing the following:

a. The active anode chemical composition shall comply with ASTM B843 Standard Specification for Grade M1C high potential magnesium anodes.

b. The anode potential and current efficiency shall be in accordance with ASTM G97 Standard Test Method.

c. A steel core shall be cast into the magnesium anode, consisting of a 20-gauge, 5/8-inch-wide, flat galvanized steel bar with a minimum length of 13 inches, aligned on the longitudinal axis of the casting.

d. One end shall be cast with a 2-inch-diameter recess, one-inch deep, centered on the core. The recess shall taper inward to one-inch diameter at its bottom, where the steel core shall protrude into the recess 7/8 inch.

2. Anode Lead Cable: Anodes shall have a factory installed lead cable, silver soldered to the flat surface of the anode core and sealed with an asphalt enamel or coal tar enamel compound. Cables shall be long enough to extend continuous and unspliced from the installed anode location to

either the connection to a pipe or to a terminal board of a GCPTS box.

a. Conductor: #12 AWG stranded copper conductor, in accordance with ASTM B3 and ASTM B8, with chemical composition UNS C11000 or UNS C11040, and Electrolytic Tough Pitch (ETP) type in accordance with ASTM B 49.

b. Insulation: High molecular weight, High Density Polyethylene (HMWD PE), in accordance with ASTM D1248, Special Grades - Weather Resistant - Black, Class C, Type III or IV, Grades W8 or W9.

3. Backfill Material: Dry, finely powered and uniformly mixed blend of 75 percent Gypsum, 20 percent Bentonite, and 5 percent Sodium Sulphate.

4. Fabric Bags: 100 percent unbleached cotton fabric with no chemical treatment that would restrict water absorption. The bag shall have a rounded bottom and open at the other end. The sides shall be sewn with a fold-over seam for strength.

5. Anode/Soil Packages: The magnesium anode shall be centered in the fabric bag and surrounded by a uniform thickness of the tightly packed backfill material. Package weight shall not be less than 70 pounds, nor less than 28 inches in length.

6. Protective Packaging: Deliver and store anode/soil packages in moisture-tight plastic bags.

PART 3 – EXECUTION

3.01 GENERAL INSTALLATIONS

A. All CP work shall be performed by individuals meeting the requirements of Subarticle 1.07A of this Section.

B. Bond Cable Installations: At all appurtenances, except at Pre-Assembled Insulating Joints and Insulated Flange Connections, install a pair of #6 AWG bond cables as follows:

1. A cable connecting the steel pipe and the appurtenance.

2. A cable connecting the steel pipe at each end of the appurtenance.

C. CP Cable Installation: Locate the attachment points of cables to the new steel pipe at the field-welded pipe joints nearest to the pipeline survey stations shown on the drawings.

1. Attach all cables by CADWELD to the field top of the pipe and appurtenances, at locations shown on the drawings. On appurtenances, attach cables to the main body casting, at locations that are clear from interference with flange bolts.

2. Where 2 or more cable attachments are required at the same location, space attachments 5-inches minimum, on center.

3. Remove all residue and debris from CADWELD areas.

4. Coat all CADWELD connection areas with epoxy putty.

D. Buried Conduit: Install in accordance with Section F16130.

E. CPTS Installation: Install Department-furnished box (CPTS box) at-grade, behind the curb in the parkway or sidewalk, on the street side closest to the pipe, unless otherwise shown on the drawings. Install along the curb as close as practical to the pipeline station, while maintaining a 3-foot distance from obstructions and 5-foot distance from a driveway. Route CP test cables to CPTS box and land cables on terminal boards in accordance with the CPTS type designated.

3.02 GCP SYSTEM INSTALLATIONS

A. GCP Anode Package Installations: For all locations designated on the drawings as GAS or GCPTS, install 2 GCP anode packages, one on each side of the pipe, as follows:

1. Remove waterproof storage bag from packages before installation.

2. On each side of the pipe excavate a hole and place an anode at a depth and lateral distance that positions it not less than 5 feet from the pipe surface. The anodes may be situated vertically or horizontally.

3. Backfill and compact with not less than 6 inches of native soil around the packages.

4. Saturate the installation areas with water.

5. Route the lead cable of each anode in 3/4-inch flexible PVC conduit from installation location to the cable attachment point on the pipeline, then as follows:

a. At GAS Locations: Attach anode lead cables to the new steel pipe.

b. At GCPTS: Route anode lead cables with CP test cables specified in Subarticle 3.02B1 of this Section in PVC conduit to the GCPTS box. Provide each cable with 3 feet of additional length coiled in the box.

B. GCPTS Installation: At all GCPTS locations indicated on the drawings, in addition to the galvanic anode packages, install CP test cables as follows:

1. Type 1 GCPTS: At typical locations indicated along the pipeline, attach 2 yellow #12 AWG test cables to the steel pipe and route with anode lead cables in a PVC conduit to the GCPTS box.

Where a new IJ is installed to isolate the new steel pipeline from an existing steel pipeline, install a Type 1 GCPTS, on both the new and the existing steel pipelines, including separate conduits and GCPTS boxes, spaced 2 feet apart behind curb.

2. Type 2 GCPTS: Where a new IJ is installed to isolate the new steel pipeline from an existing cast iron or ductile iron pipeline, attach 2 yellow #12 AWG test cables to the new steel pipe, and 2 blue #12 AWG test cables to the existing cast iron or ductile iron pipe. Route all test cables

with anode lead cables in PVC conduit to the GCPTS box.

3. Provide test cables with 3 feet of additional length coiled in the GCPTS box.

4. Perform potential test in accordance with Subarticle 3.04B of this Section.

5. In the GCPTS box, connect test cables and anode lead cables to the terminal lugs of the respective Type 1 or Type 2 GCPTS terminal board as shown on the drawings.

6. Label the terminal board with the structure origin for each test cable connection.

3.03 ICCP SYSTEM INSTALLATION (NOT USED)

3.04 CATHODIC PROTECTION SYSTEM TESTS

A. General Tests:

1. Test all cable connections made by the exothermic weld method for adhesion.

2. The CP Specialist shall prepare and furnish to ~~the Engineer~~Metro and DWP a report summarizing all test data and results.

3. Soil Resistivity Tests: Obtain a one-gallon soil sample at the approximate spring line at the following location(s):

a. Where the new pipeline connects to an existing pipeline.

b. All GCP anode, GCPTS, or ICCPTS installations on the pipeline route.

Test samples in accordance with ASTM G57.

4. Conductivity Tests of Electrically Insulated Connections:

a. Test pre-assembled insulating joints before installation in the pipeline.

b. Test flange connections as soon as practical after the installations have been completed.

c. Test pre-assembled insulated joints and insulated flange connections as soon as practical after the pipeline has been filled with water.

B. GCP System Tests: During the installation of each GCPTS, take potential test readings of each test cable with a copper-copper sulfate reference cell before the cables are connected to the GCPTS terminal board.

END OF SECTION